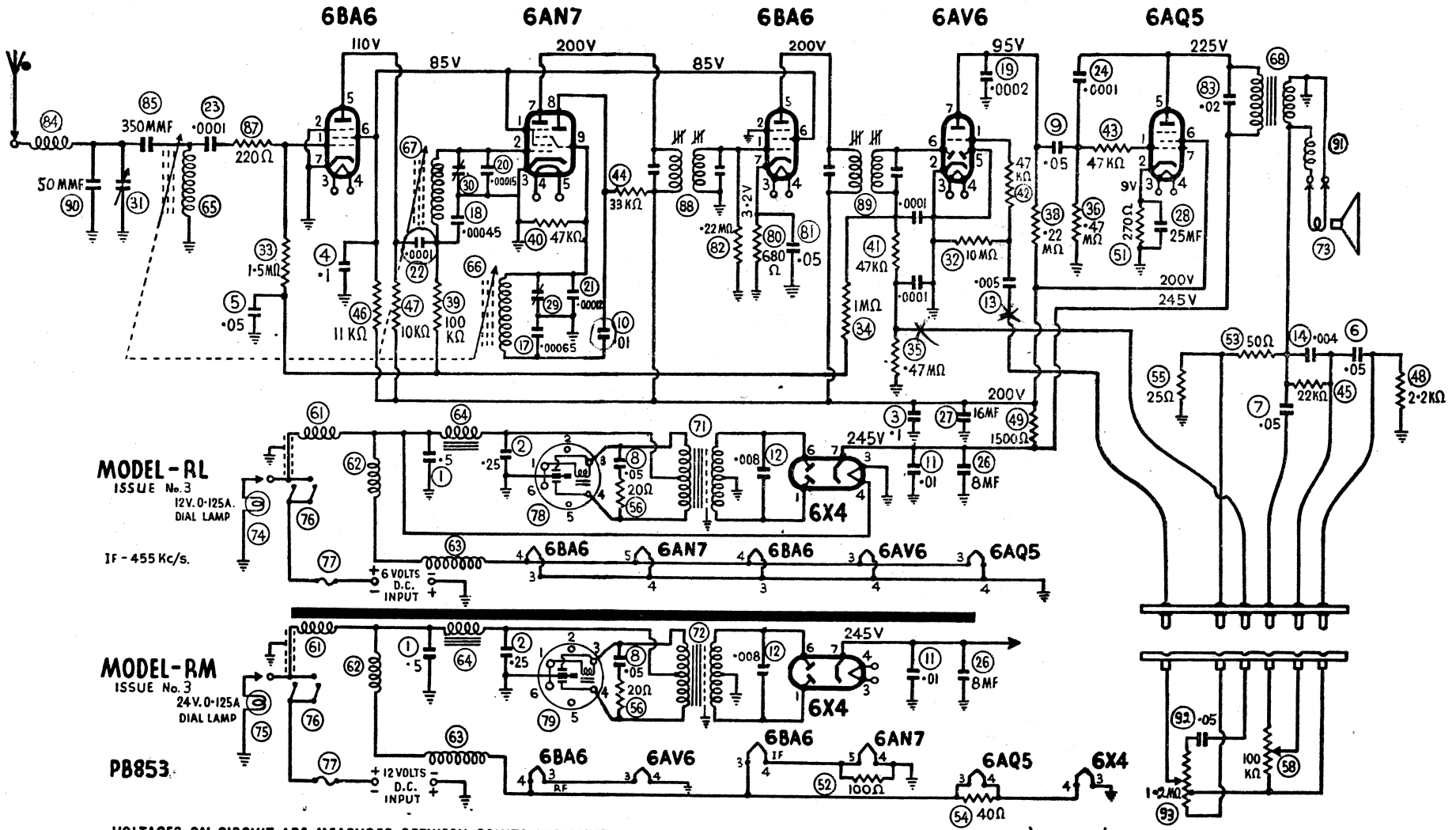

VOLTAGES ON CIRCUIT ARE MEASURED BETWEEN POINTS INDICATED AND CHASSIS WITH A DC. VACUUM TUBE VOLTMETER 6 VOLTS DC. INPUT.
WHEN MEASURING VOLTAGES IN HIGH IMPED. CIRCUITS, LOWER READINGS THAN THOSE SHOWN WILL BE OBTAINED IF A V.T.V.M. IS NOT USED DEPENDING ON THE RESISTANCE OF THE METER USED EG: 1000Ω/VOLT OR 20,000Ω/VOLT