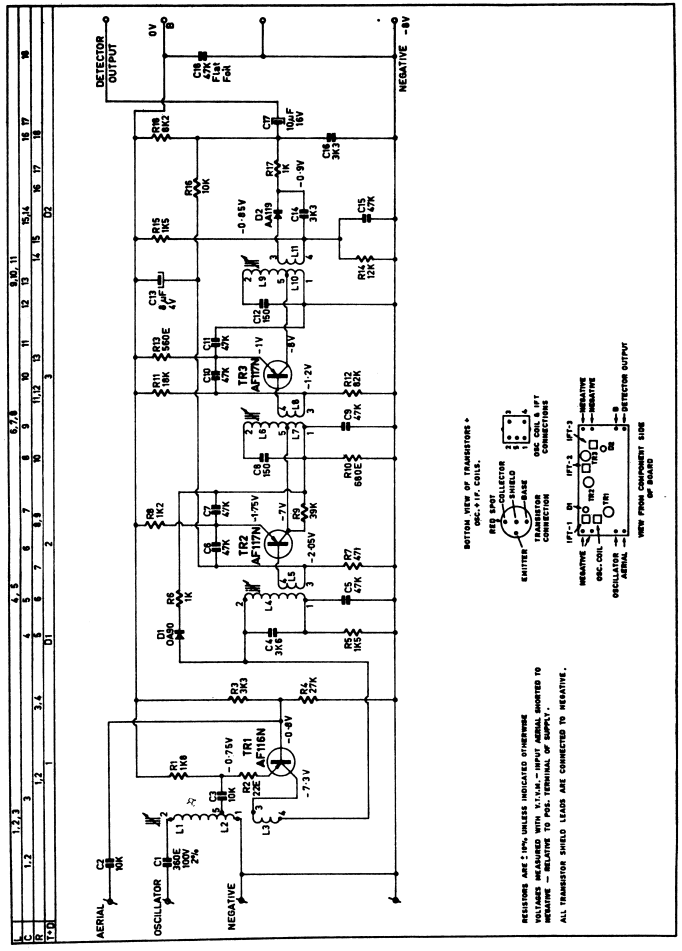
DETECTOR OUTPUT
0V
NEGATIVE -8V
AERIAL
OSCILLATOR
NEGATIVE
TR1 AF116N
TR2 AF117N
TR3 AF117N
D1 OA90
D2 AA119
RESISTORS ARE ± 10% UNLESS INDICATED OTHERWISE
VOLTAGES MEASURED WITH V.T.V.M. INPUT AERIAL SHORTED TO NEGATIVE - RELATIVE TO PCB TERMINAL OF BATT.
ALL TRANSISTOR SHIELD LEADS ARE CONNECTED TO NEGATIVE.
BOTTOM VIEW OF TRANSISTORS + OSC. & I.F. COILS.
TRANSISTOR CONNECTIONS
OSC. COIL & I.F.T. CONNECTIONS
VIEW FROM COMPONENT SIDE OF BOARD
OSCILLATOR AERIAL
DETECTOR OUTPUT

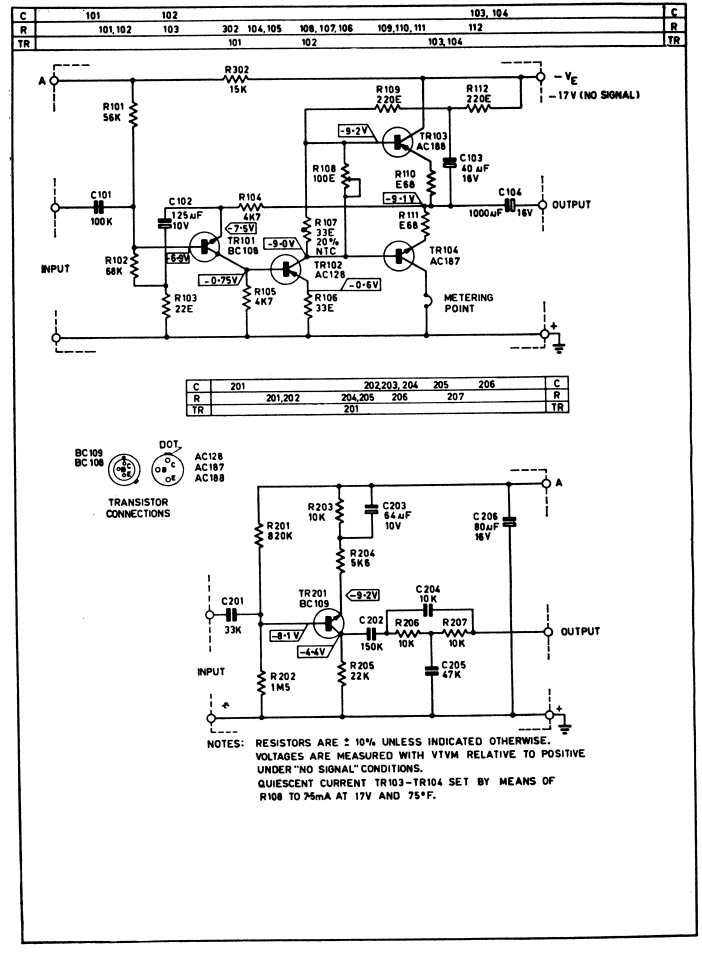
-V_E
-17V (NO SIGNAL)
INPUT
OUTPUT
METERING POINT
TR101 BC108
TR102 AC128
TR103 AC188
TR104 AC187
BC109 BC108
AC128 AC187 AC188
TRANSISTOR CONNECTIONS
TR201 BC109
NOTES: RESISTORS ARE ± 10% UNLESS INDICATED OTHERWISE.
VOLTAGES ARE MEASURED WITH VTVM RELATIVE TO POSITIVE UNDER "NO SIGNAL" CONDITIONS.
QUIESCENT CURRENT TR103-TR104 SET BY MEANS OF R108 TO 75mA AT 17V AND 75°F.

PHILIPS MODEL RH570

C	301, 302 303, 304, 311 305 306 312 307 308	C
R	308 301 303 304 305 306 108	R
L	301, 302, 303, 304, 305 307	L
	S2 S3 D301, D302 UF 302 La2 UA 501 S1 UA 501	

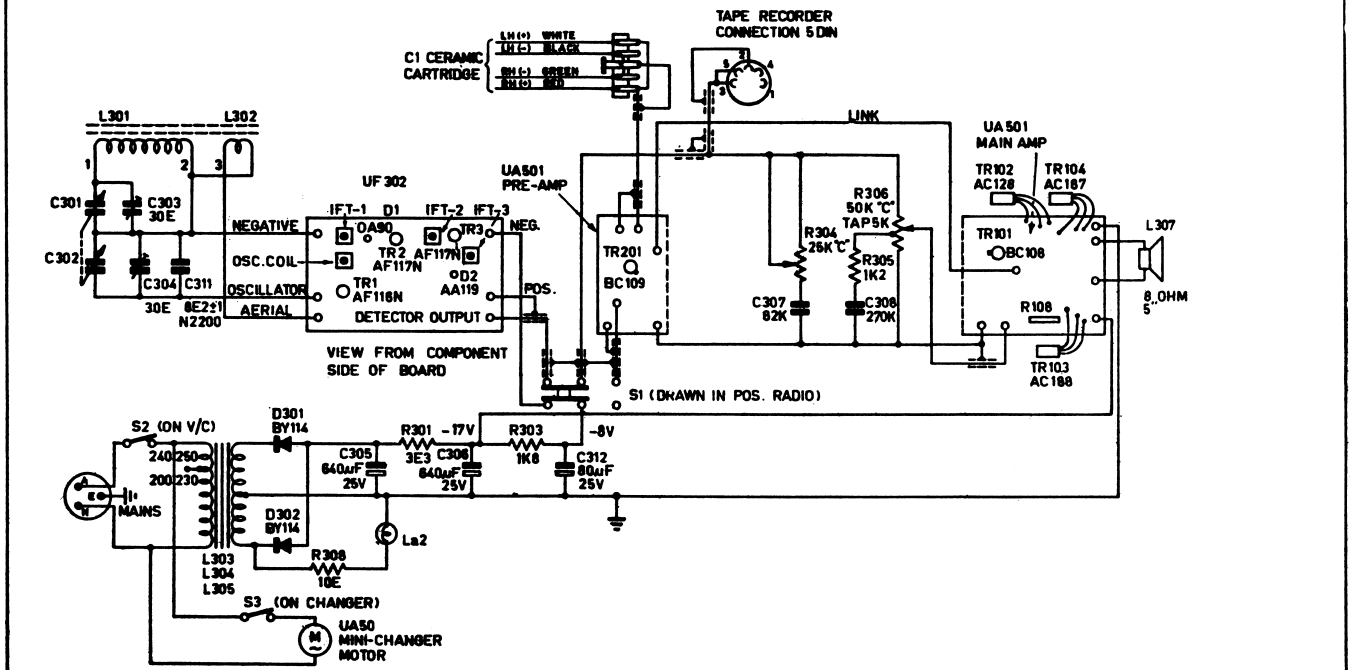

NOTES:
1. MAIN AMPLIFIER MUST NOT BE RUN WITH TR102, 103, 104, REMOVED FROM THEIR RESPECTIVE HEATSINKS.
2. COMPONENTS RESISTORS ARE 1/2 W-10% EXCEPT WHERE OTHERWISE STATED. CAPACITOR VALUES IN pF EXCEPT WHERE OTHERWISE STATED. TOLERANCE IS 10%
3. MODULE CIRCUITS UA501 UF 302
4. LAMP La2 12V 2W TYPE 12829.
5. SOCKETS SHOWN FROM LUG SIDE.
6. VOLTAGES SHOWN UNDER NO SIGNAL CONDITIONS.

MECHANICAL PARTS LIST

Description	Code No.
Cover—T/R connection socket	CR.572.314
Dial cord (24" wanted) bulk	CE.085.91
Dial cord spring	CS.200.040
Dial cursor	CS.410.666
Dial drum	CS.360.403
Function strip/dial scale	CR.280.444
Knob—control, 3x	CR.524.519
Lampholder	CZ.367.723
Socket—T/R connection	979/5x180
Spring — conical (changer mtg.), 4x	CS.200.088
Switch—function	CZ.222.038
Tuning spindle	CS.351.278
Cabinet hardware—	
Carrying handle	CR.523.234
Spring—return (for carr. handle), 2x	3104.104.00551
Clip — retaining (for handle spring) 2x	3104.101.21021
Hinge, L.H.	CR.253.635
Hinge, R.H.	CR.253.634
Latch (on lid)	CS.281.008
Catch (on case)	CS.281.007
Rubber foot, 4x	CS.423.050

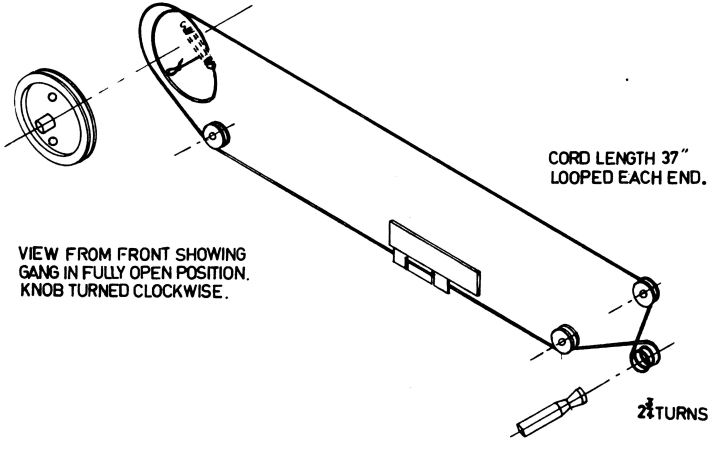

PHILIPS Service notes

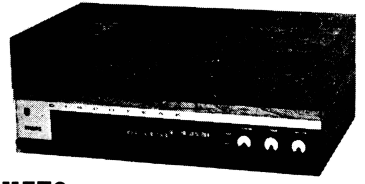

MODEL RH570

SPECIFICATIONS

Power supply	200-250V, 50Hz.
Current consumption—radio	30 mA A.C. at 240V.
—phonogram	90 mA A.C. at 240V.
Tuning range	525-1615kHz.
Record changer	BSR type UA50.
Pick-up head	BSR type CIST3
Dial lamp	12V, 2W, type 12829, Ba7s.
Modules	1 x UF302 1 x UA501

ACCESS FOR SERVICE

Remove the changer transit spindle, place lid on and turn unit upside down on a protective cloth. Remove the case bottom panel. Remove the three control knobs. Remove three screws mounting the chassis plate and a fourth one located near the tape socket. The chassis may now be lifted out of the case to the extent of lead length which allows for full service accessibility. N.B. dial lamp can be replaced without the need for chassis removal.

If the module is to be operated away from the chassis, ensure that the transistors are fitted with flag type heat sinks and that those in turn are attached to a suitable metal strip for adequate heat dissipation.

Reinstallation is a reversal of the above procedure but with the need to check that leads do not foul the changer mechanism.

OUTPUT TRANSISTOR ADJUSTMENT

Provision is made by means of metering points for insertion of a meter for adjustment of output transistor current by means of R108. Current should be adjusted, at no signal, in accordance with the following table.

Temp. °F.	TR103/104 Current (mA).
75	7.5
80	7.7
85	7.8
90	8.0
95	8.1
100	8.4
105	8.8
110	9.3
120	10.2

ALIGNMENT

The location of the various trimming points used in alignment is shown on circuit and interconnection drawings.

I.F. ALIGNMENT

Connect signal generator via I.F. dummy to base of TRI. Put volume control to maximum. Retune I.F.T.s by screwing out cores about one turn. Peak cores in the following order—I.F.T.3, I.F.T.2, I.F.T.1.

R.F. ALIGNMENT

Connect signal generator via a coupling loop around the rod aerial assembly. Put volume control at maximum and tone control at treble. Fully close the tuning capacitor and position the dial cursor to the stop mark on the dial scale. Peak oscillator coil at 520 kHz. Fully open the tuning capacitor and peak oscillator trimmer at 1620 kHz. Repeat these two operations until band end setting is correct.

Tune to 600 kHz and adjust aerial coil for maximum output. Tune to 1500 kHz and adjust aerial trimmer for maximum output. Repeat these two operations for correct tracking.