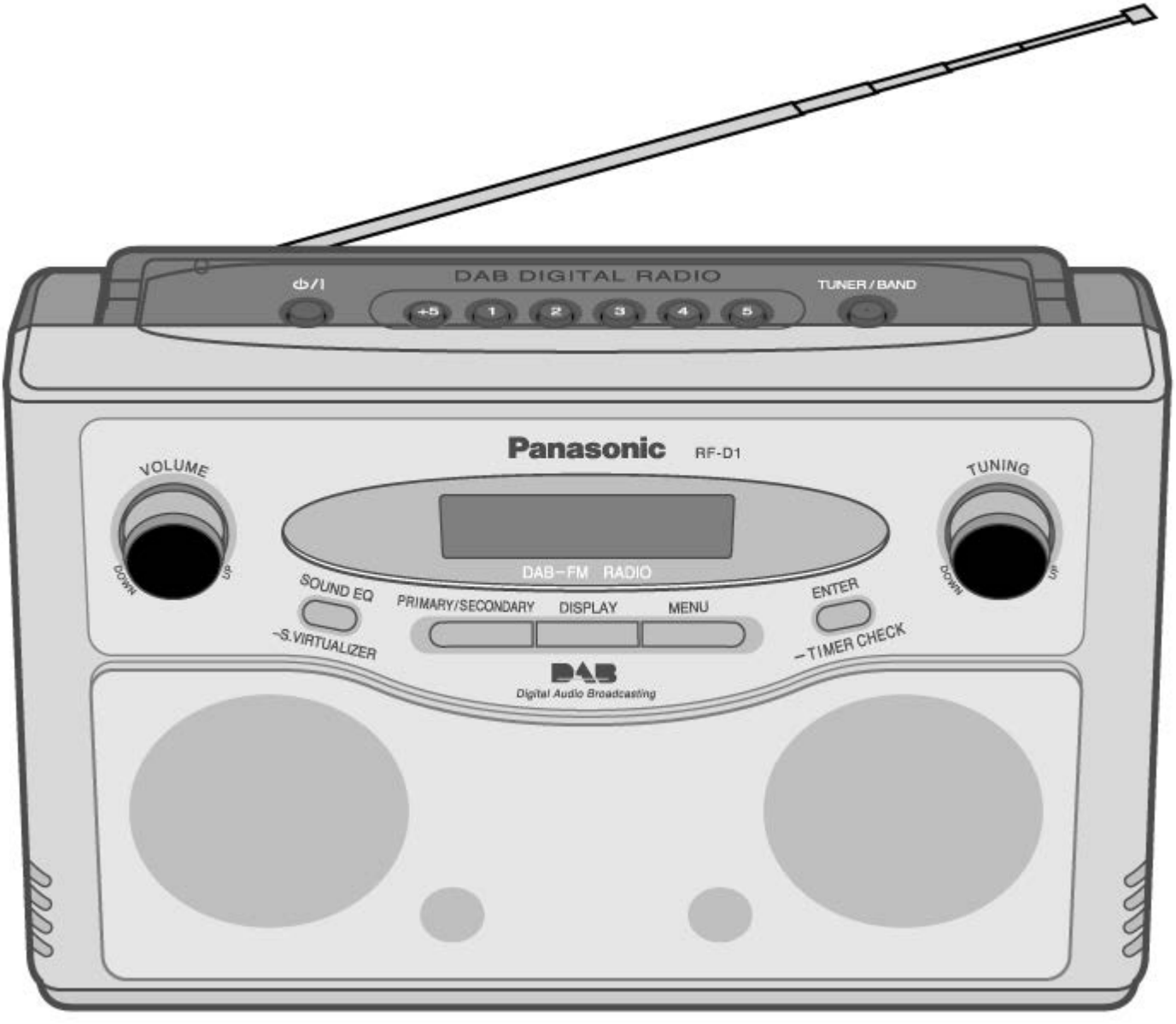
DAB DIGITAL RADIO
TUNER / BAND
+5
1
2
3
4
5
Panasonic
RF-D1
VOLUME
DOWN
UP
TUNING
DOWN
UP
DAB-FM RADIO
SOUND EQ
~S.VIRTUALIZER
PRIMARY/SECONDARY
DISPLAY
MENU
ENTER
~TIMER CHECK
DAB
Digital Audio Broadcasting

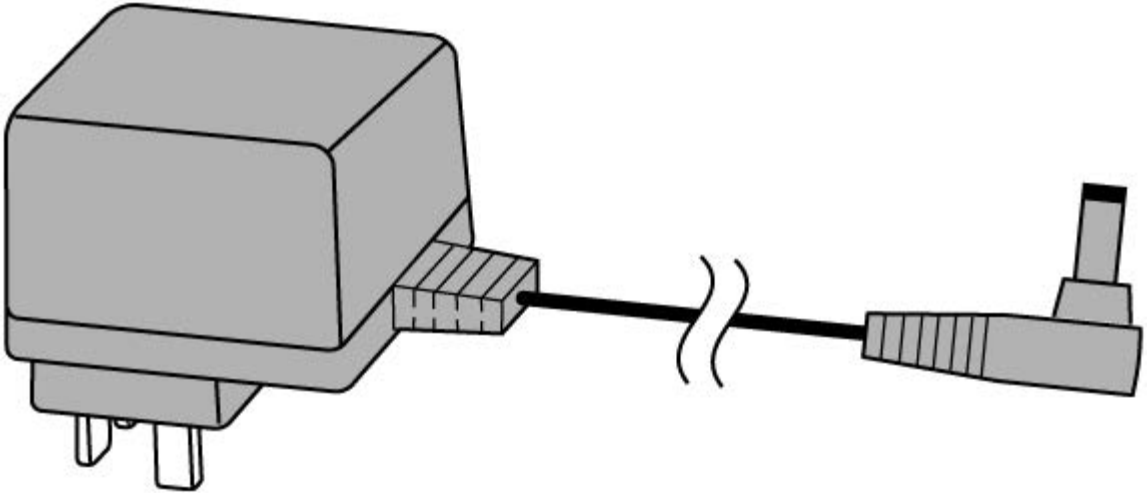

Note:
The parts marked * do not be supplied

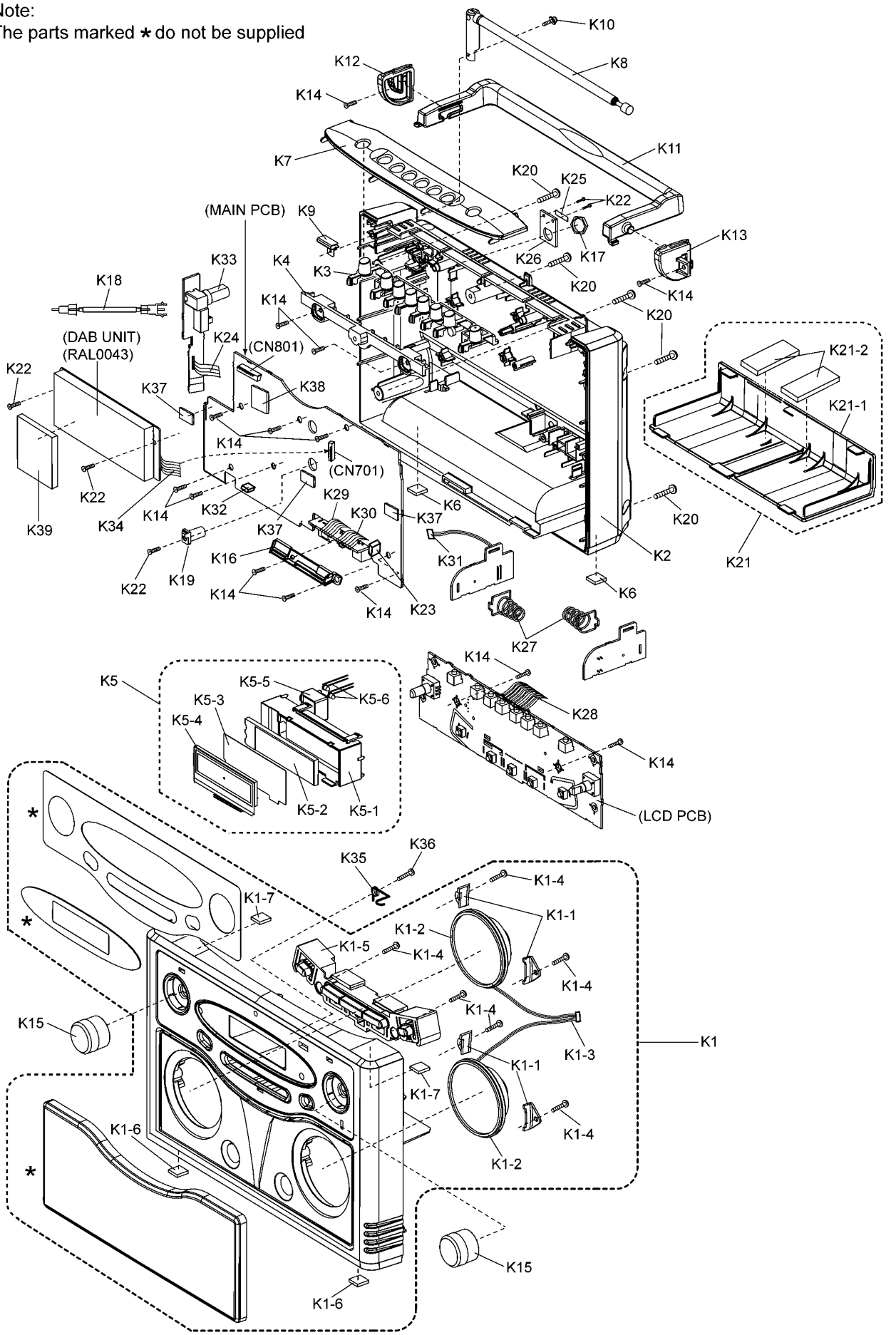

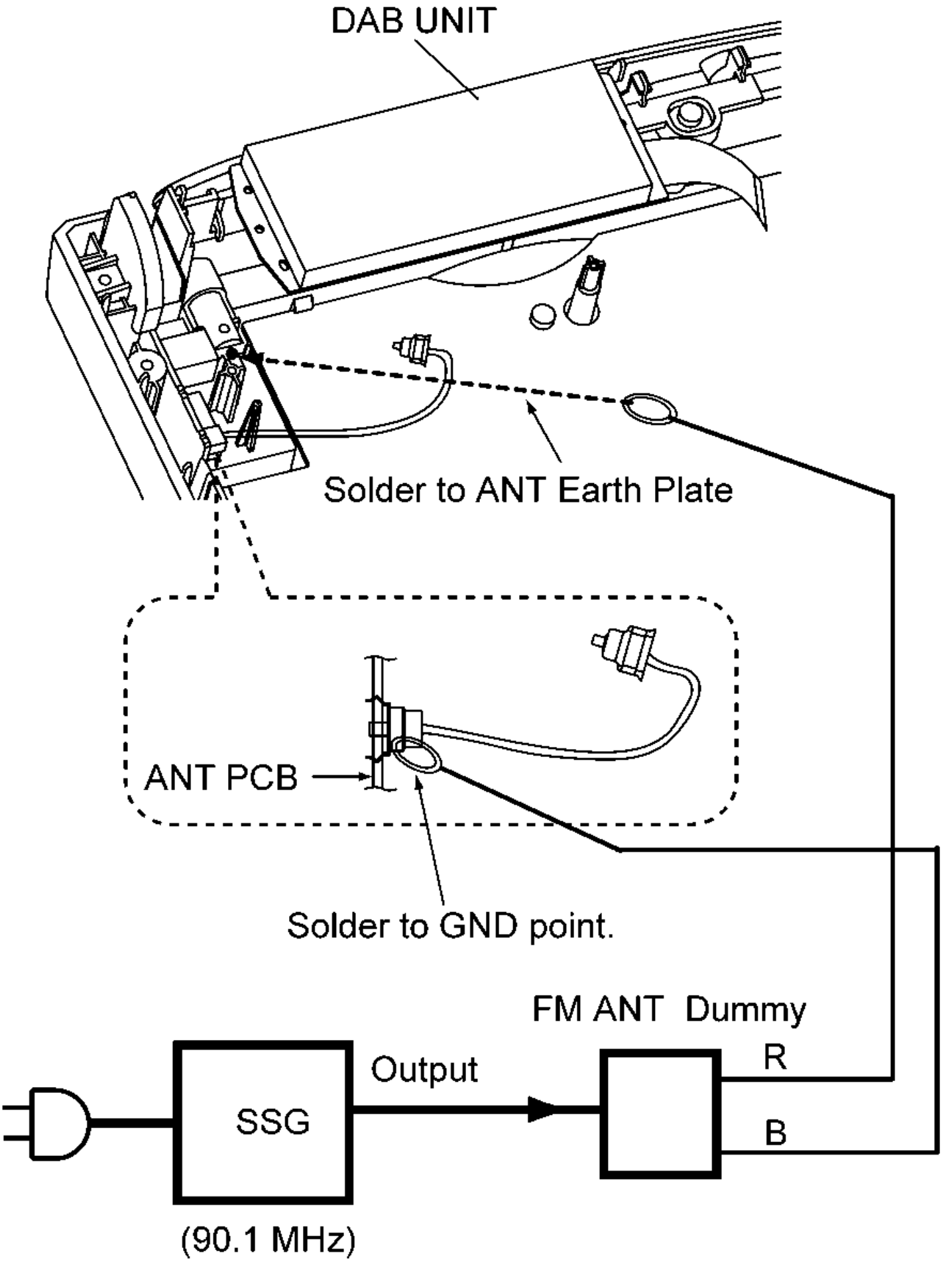
DAB UNIT
Solder to ANT Earth Plate
ANT PCB
Solder to GND point.
FM ANT Dummy
Output
R
B
SSG
(90.1 MHz)

1.Remove the battery cover.

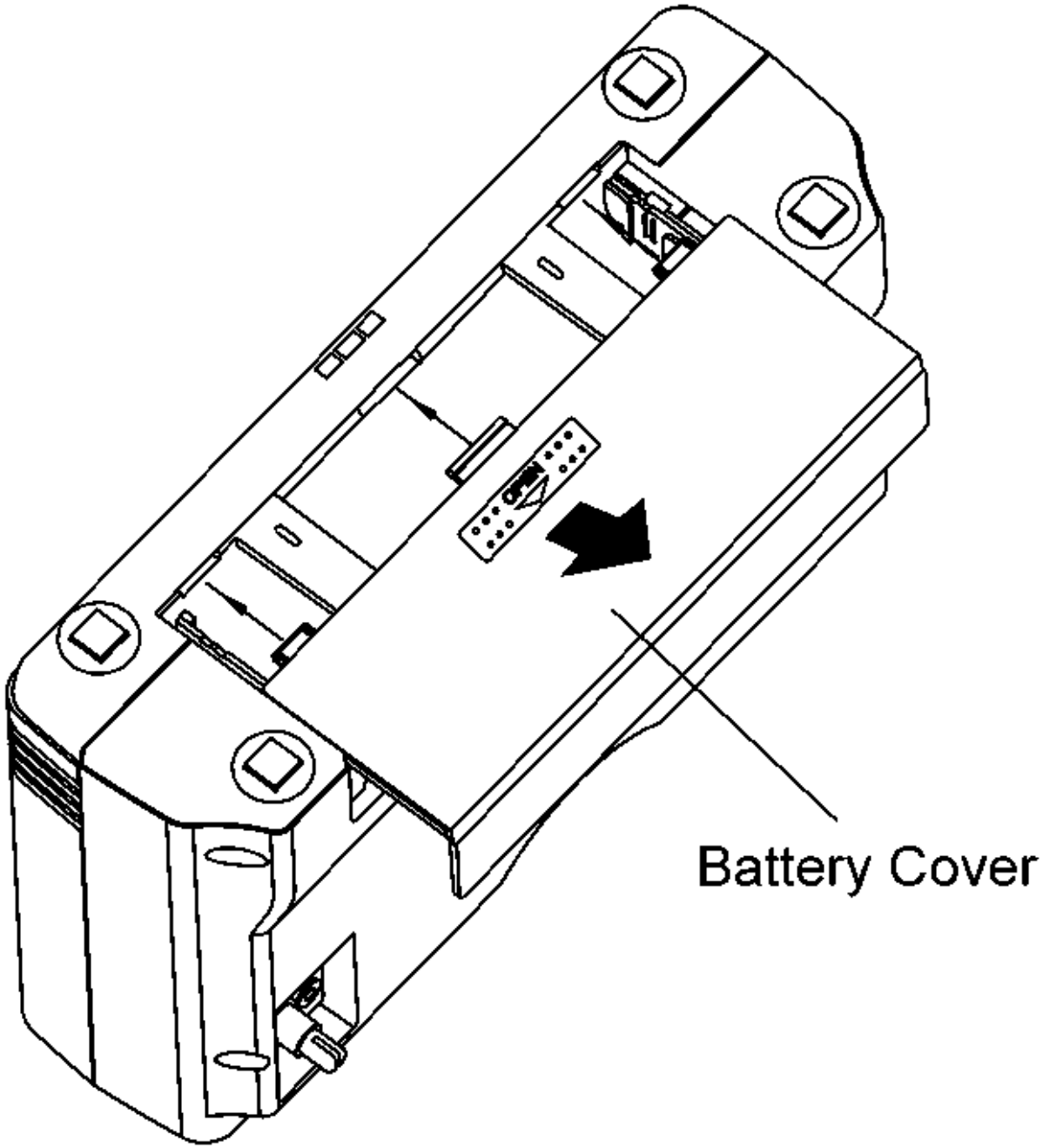

1.Remove the screws x 5.

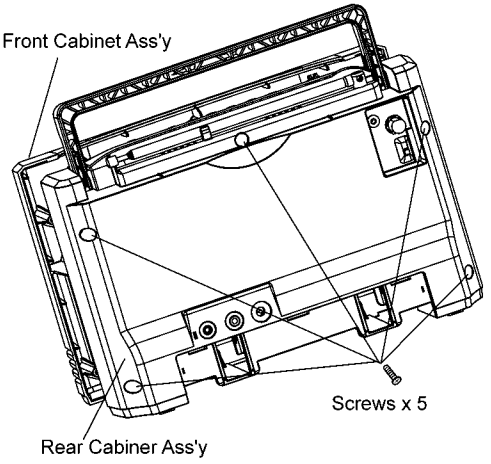

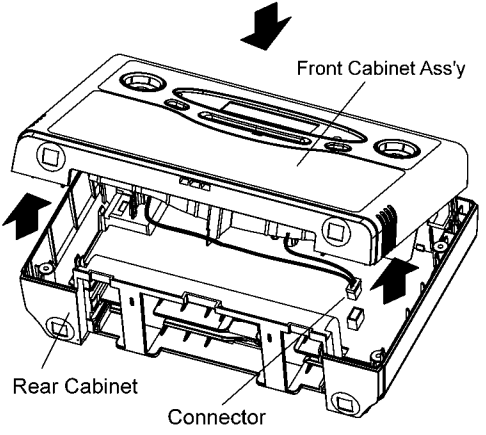

2.Remove the front cabinet in the direction of arrow.
3.Remove the connector and then remove the front cabinet.

1. Remove the volume knob and tuning knob in the direction of arrow.

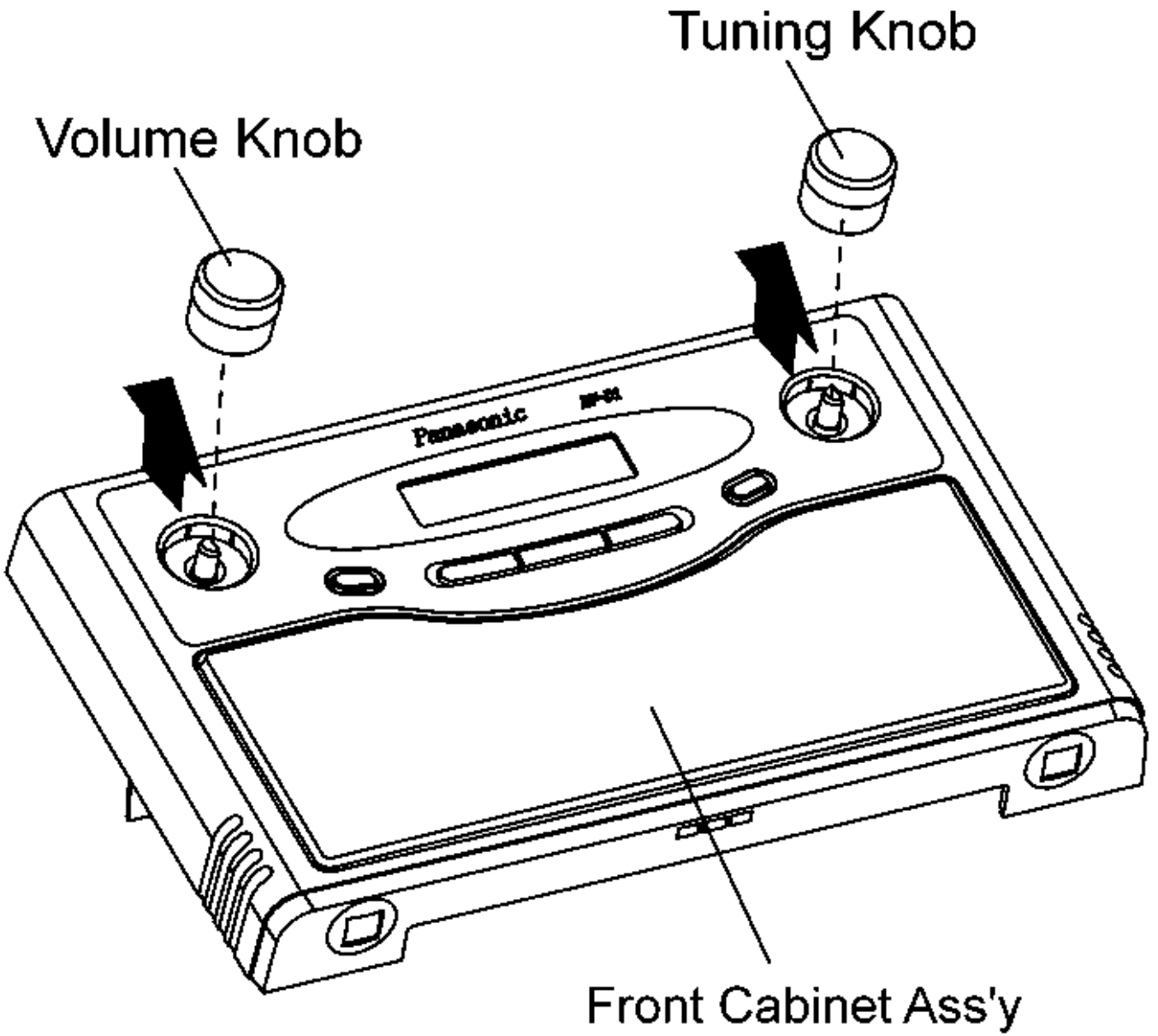

1. Remove the 19P wire.
2. Remove the screws x 2.
3. Release the claws x 5,and then remove the operation PCB.

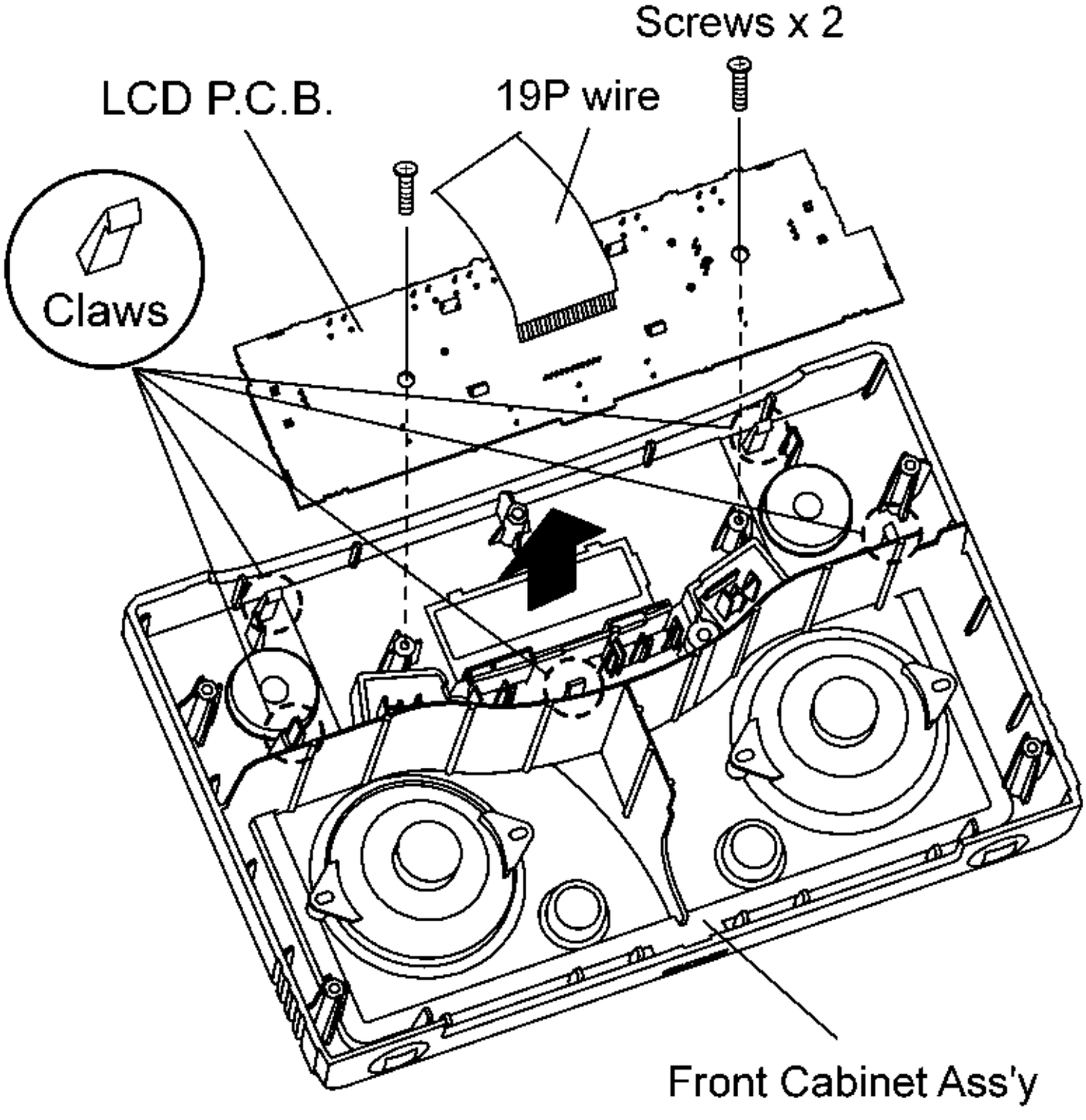

1. Remove the solders 11 points.
2. Release the claws x 4,and then remove the LCD ass'y.

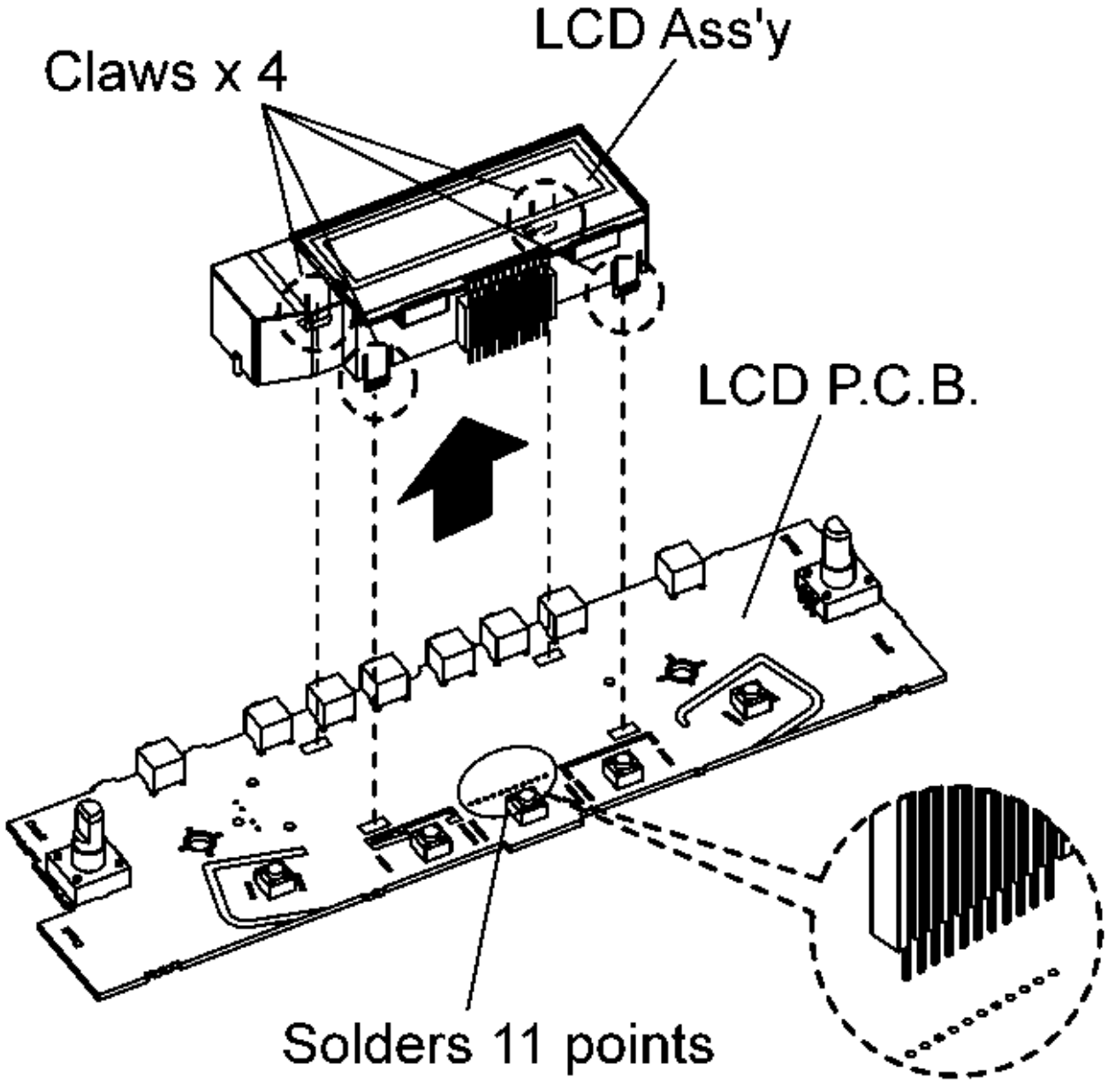

1. Remove the screws x **4**.
2. Remove the speaker angles x 4,and then remove the speakers.

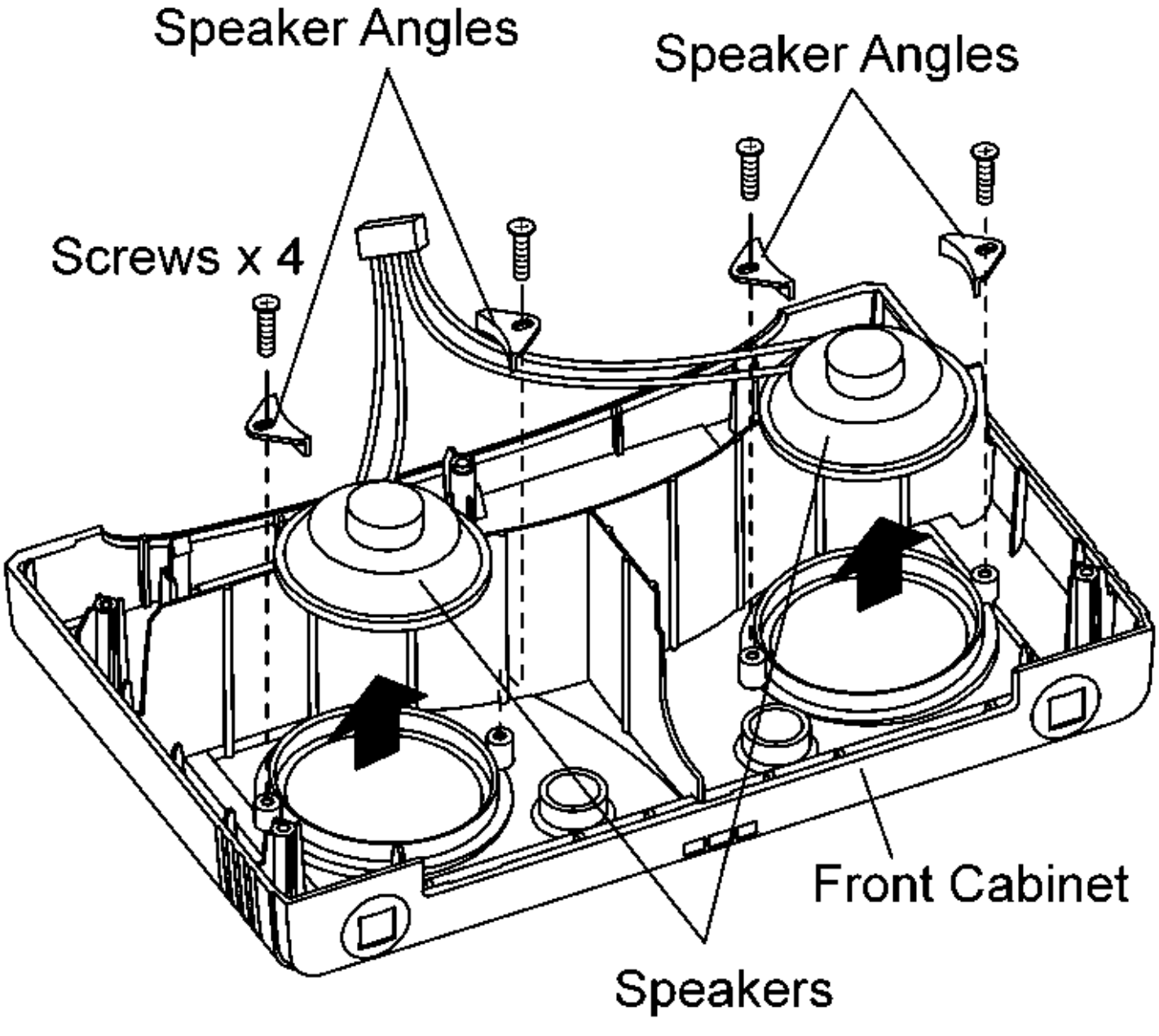

1.Remove the screws x 2.
2.Remove the operation button in the direction of arrow.

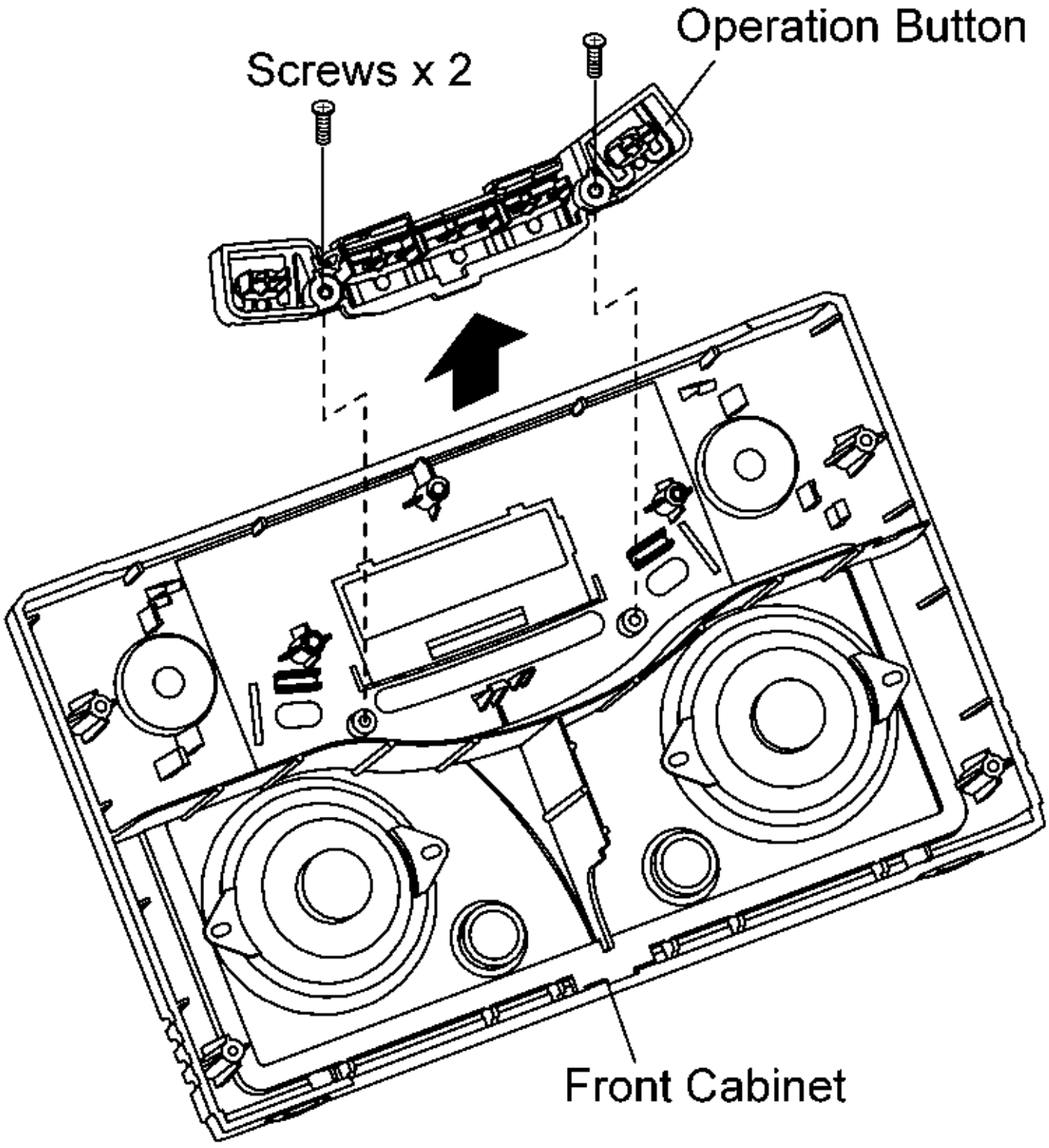

1.Remove the screws x 3.
2.Remove the DAB Unit piece.
3.Release the FPC and connector.
4.Remove the DAB Unit.

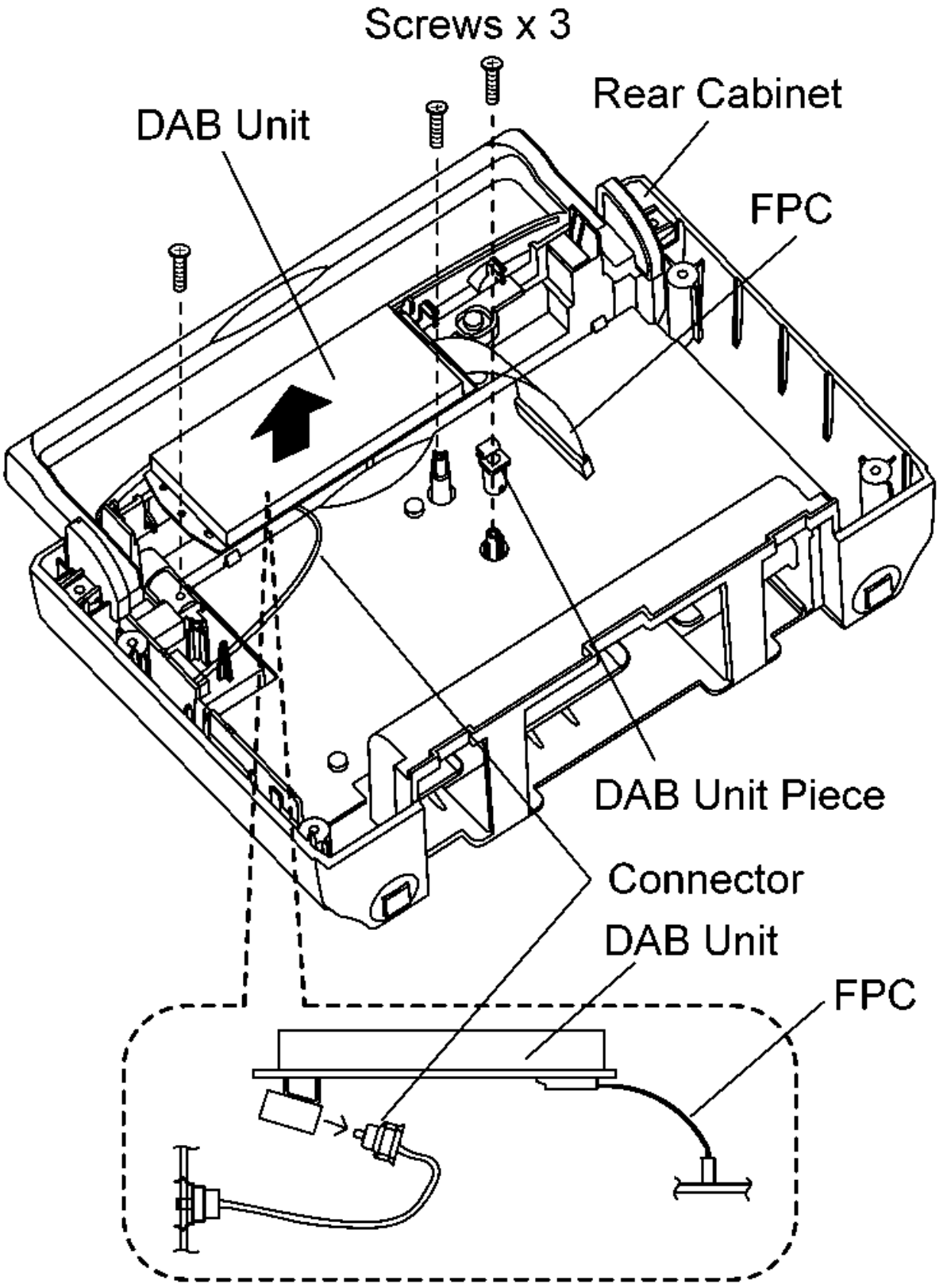

1.Remove the screws x 2.
2.Remove the handle pieces and remove the handle.

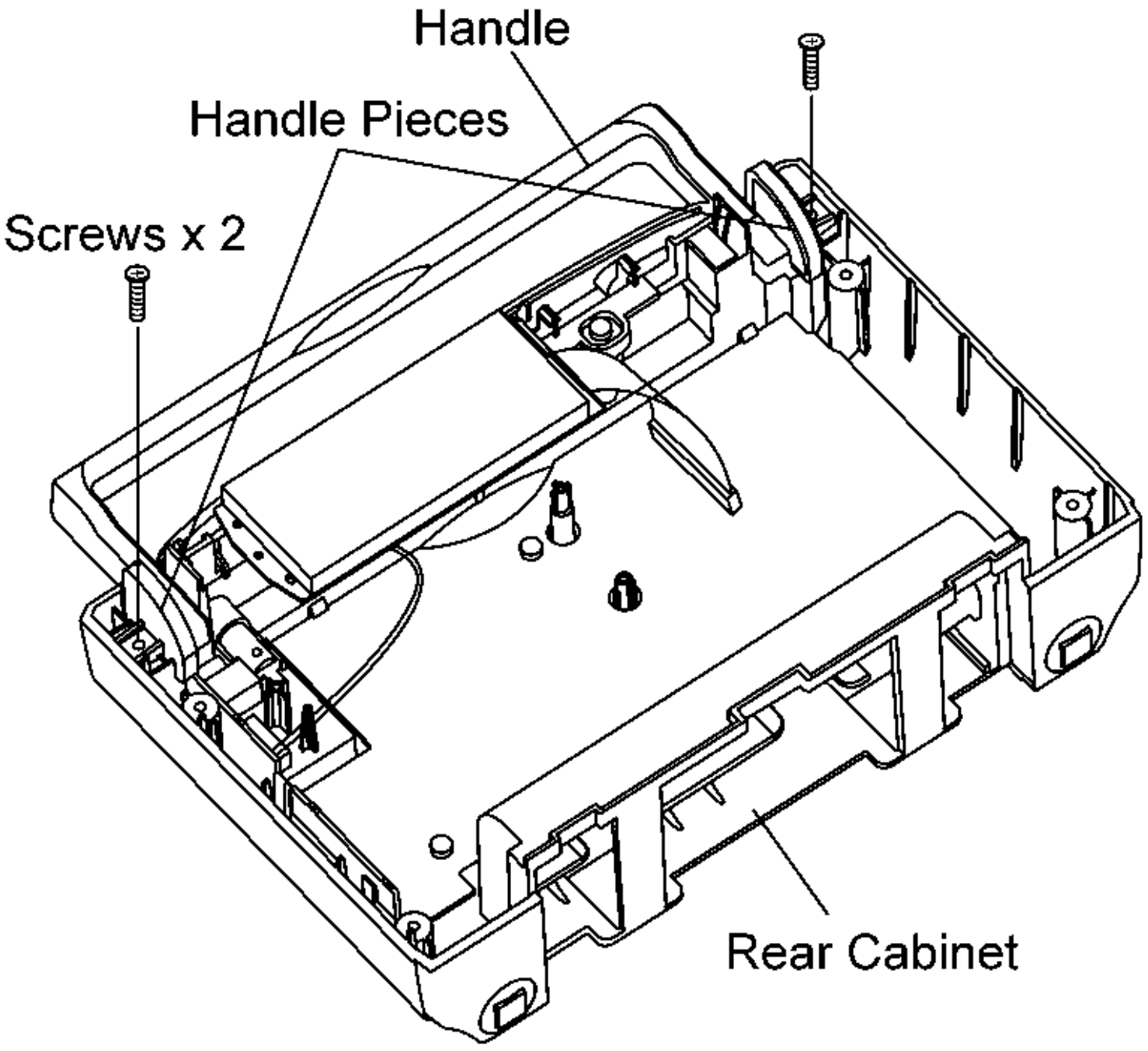

1. Remove the screws x 2.
2. Remove the power button piece and power button in the direction of arrow.

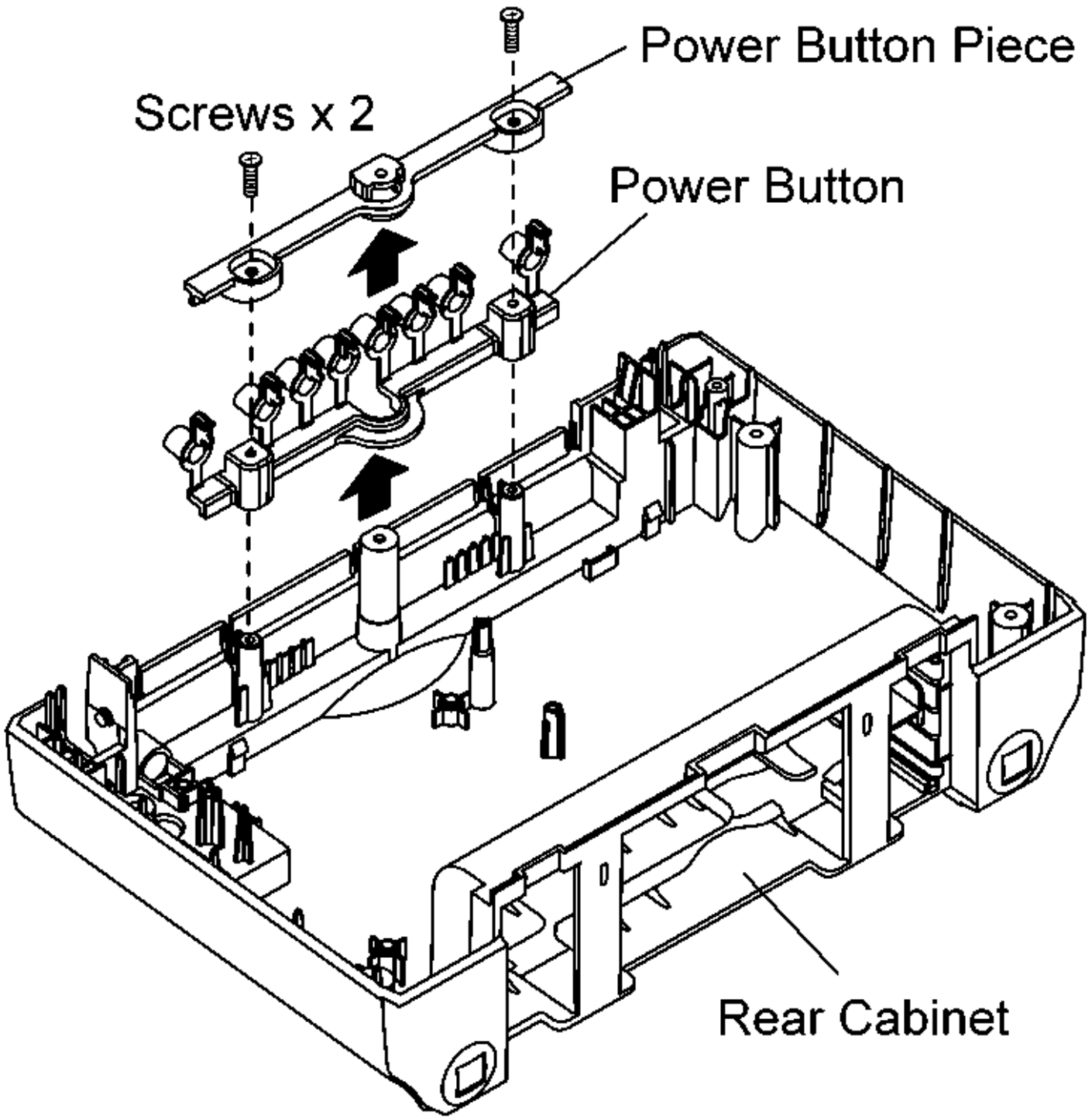

1.Remove the screw x 1.
2.Unsolder the 4P wire.
3.Release the claw.
4.Remove the ANT PCB in the direction of arrow.

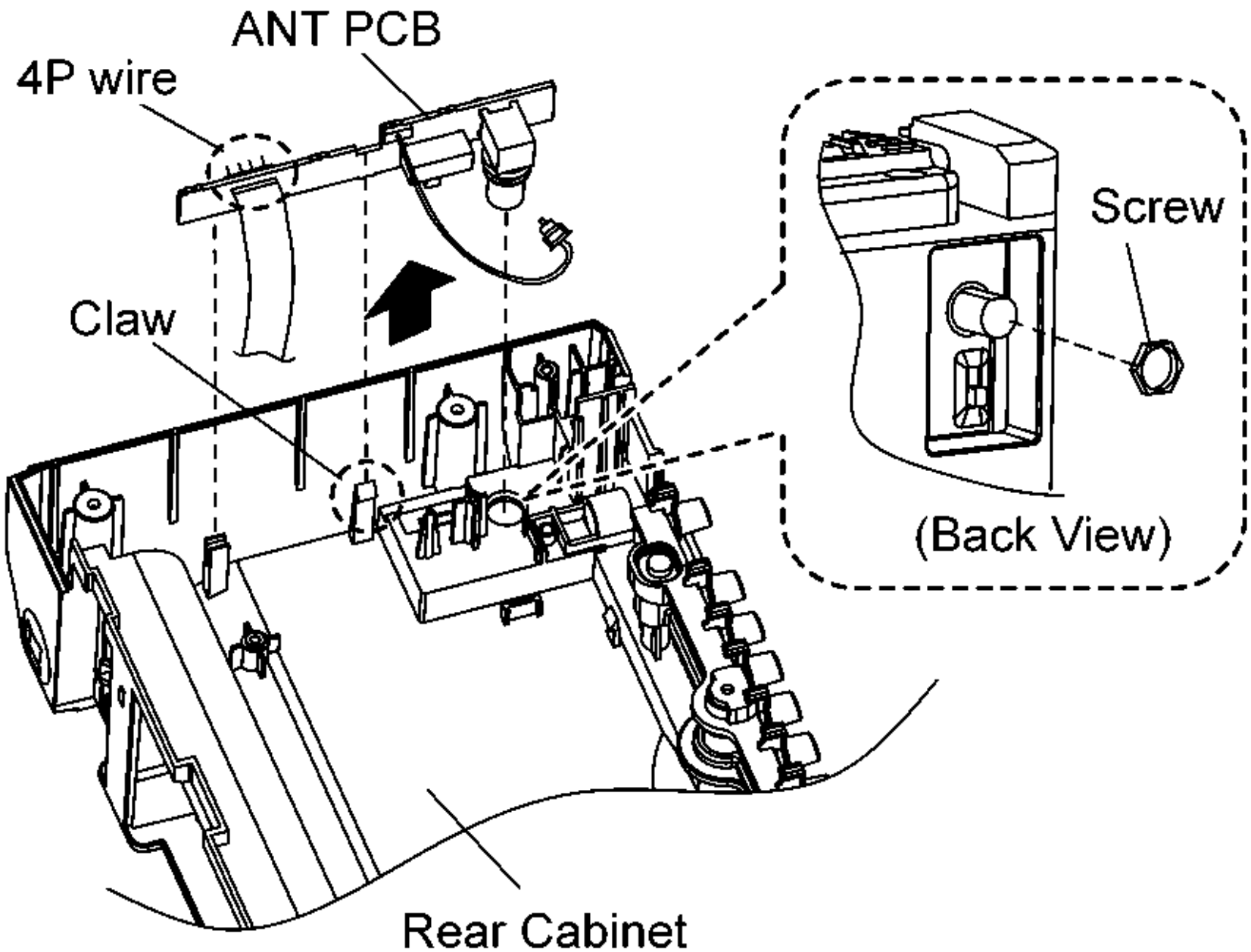

1.Remove the screw x 2.
2.Release the jack piece.

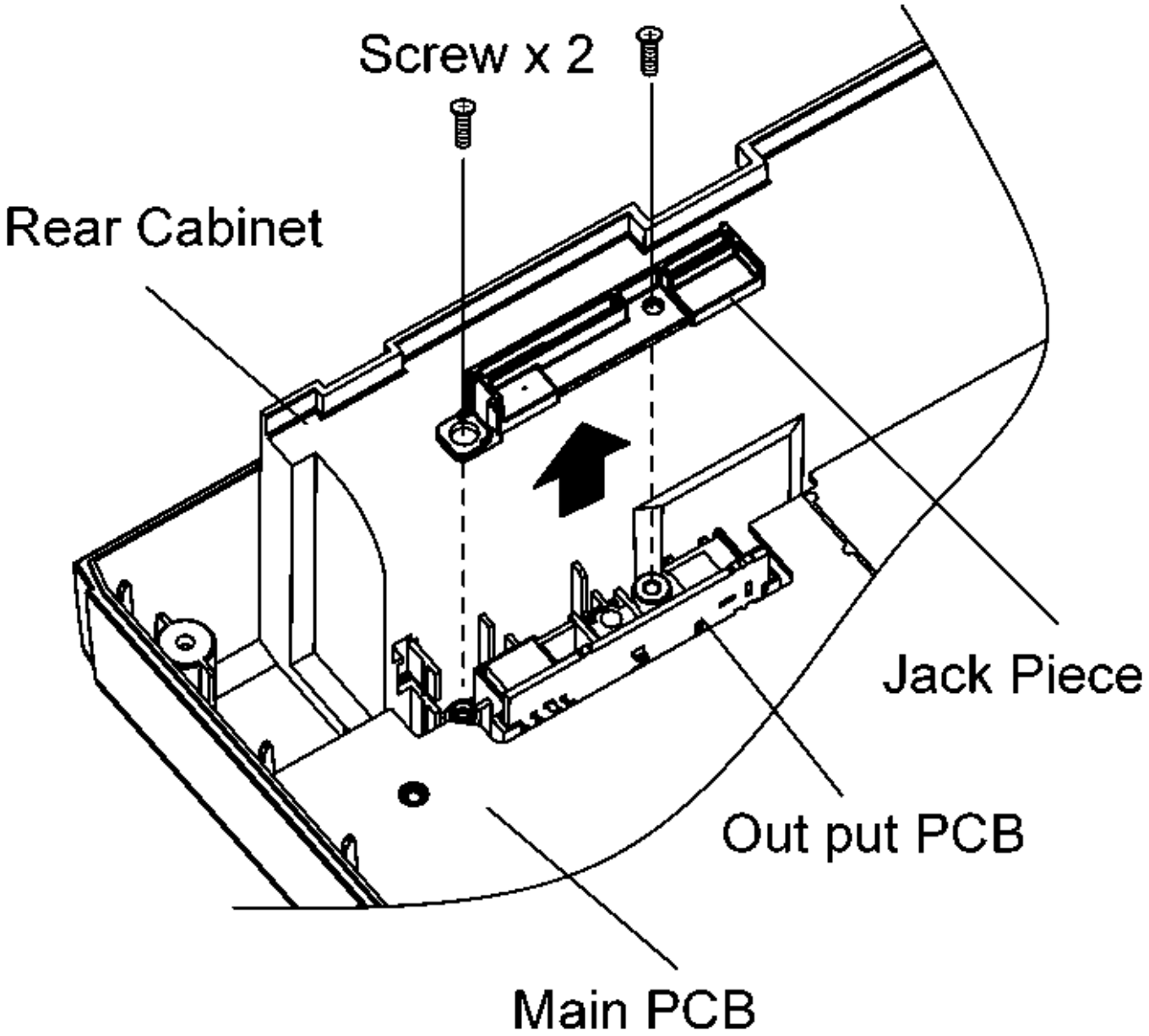

1. Remove the screws x 6.
2. Release the claws x 2.
3. Remove the main PCB and out put PCB in the direction of arrow.

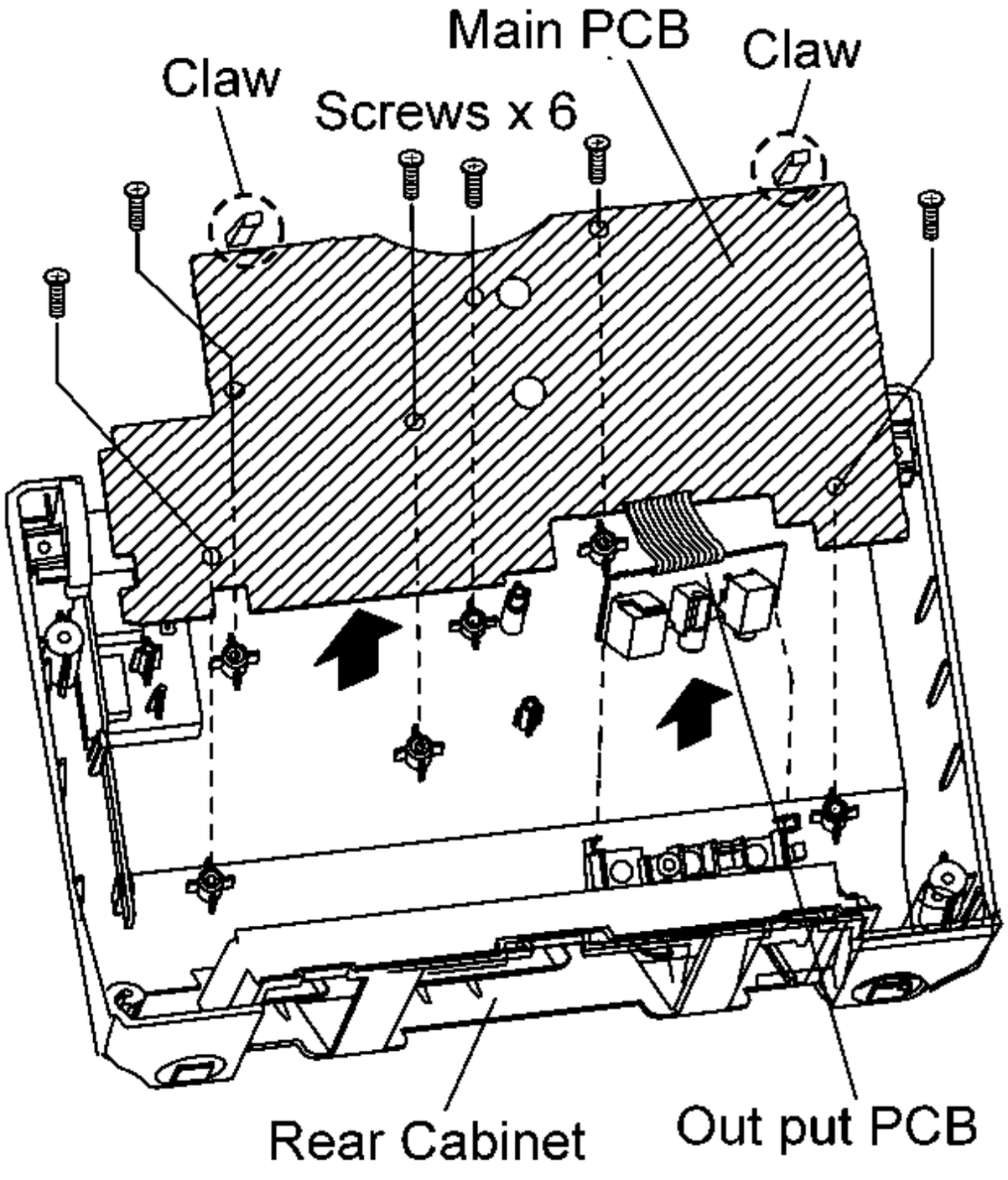

1.Release the claws x 2.
2.Remove the battery PCB (1) and battery PCB (2) in the direction of arrow ① and ②.

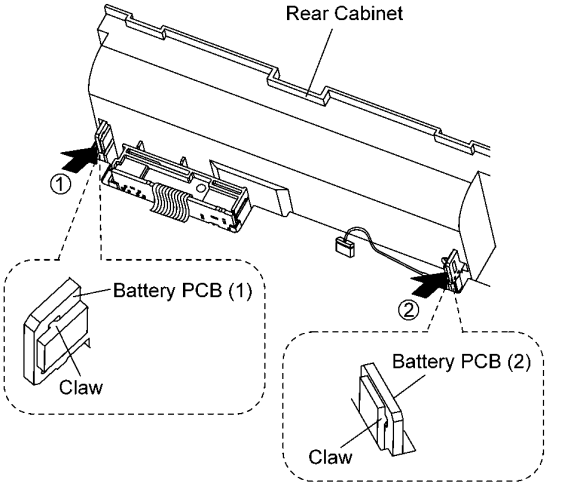

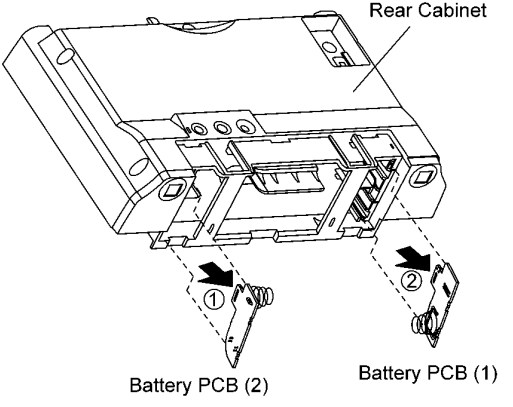

C1BB00000846
C1BB00000717
C3EBCG000108

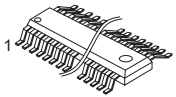

C0AAAA000035

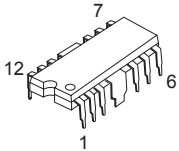

M30621MCP

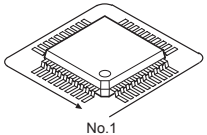

C0CAABC00007
C0EAG0000052

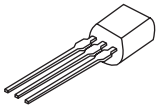

2SA20570P

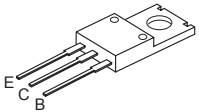

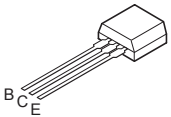

B1ACCF000076
B1GACFGJ0005
B1GCCFGJ0003
B1GACFNN0011

2SD1819ARL

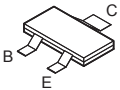

B1ACND000003

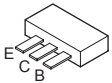

MAZ41300H
MAZ40620MF

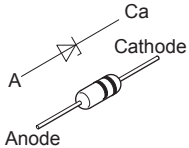

B0CDAB000019

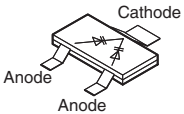

B0AACK000004

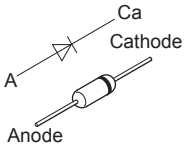

1N4005ST

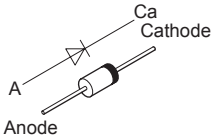

B1AAGD000015

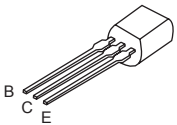

1SS390TE61

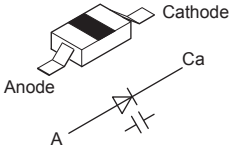

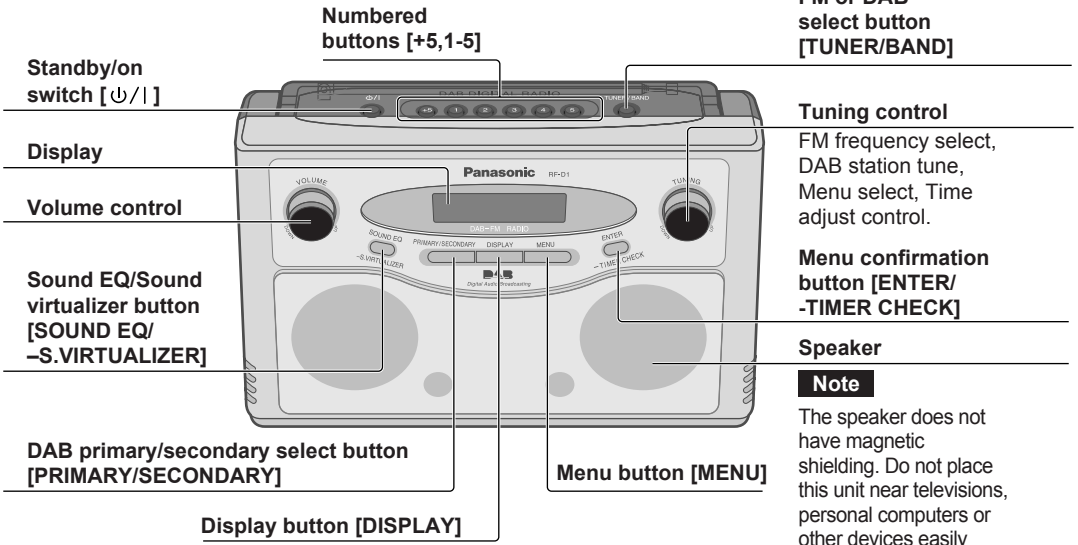
Numbered buttons [+5,1-5]
FM or DAB select button [TUNER/BAND]
Standby/on switch [⏻/I]
Tuning control
FM frequency select, DAB station tune, Menu select, Time adjust control.
Display
Volume control
Sound EQ/Sound virtualizer button [SOUND EQ/ –S.VIRTUALIZER]
Menu confirmation button [ENTER/ -TIMER CHECK]
Speaker
Note
The speaker does not have magnetic shielding. Do not place this unit near televisions, personal computers or other devices easily influenced by magnetism.
DAB primary/secondary select button [PRIMARY/SECONDARY]
Menu button [MENU]
Display button [DISPLAY]
DAB PRESET RADIO
TUNER/BAND
+5
1
2
3
4
5
Panasonic
RF-D1
VOLUME
TUNING
DAB+FM RADIO
SOUND EQ
–S.VIRTUALIZER
PRIMARY/SECONDARY
DISPLAY
MENU
ENTER
–TIMER CHECK
Digital Audio Broadcasting

Notes:

1.SW601: DAB EXT/IN switch.
2.SW901: Tuner/Band switch
3.SW902: DM +5 switch.
4.SW903: DM1 switch.
5.SW904: DM2 switch.
6.SW905: DM3 switch.
7.SW906: DM4 switch.
8.SW907: DM5 switch.
9.SW911: Sound EQ switch.
10.SW912: Primary/Seconday switch.
11.SW913: Display switch.
12.SW914: Menu switch.
13.SW915: Enter/Tuning Mode switch.
14.SW918: Power switch.
15.SW921: Volume switch.
16.SW922: Tuning switch.

17.DC voltage measurement are taken witch electronics.

18.Voltmeter from negative terminal of battery.
( )...FM position, [ ]...DAB position,
No mark...FM & DAB position.

19.Battery current:
Volume minimum output (FM).....145 mA.
Volume maximum output (FM).....255 mA.
Volume minimum output (DAB).....350 mA.
Volume maximum output (DAB).....750 mA.
(Radio, 74dB 30% Modulation.)

20. +B Voltage Line, FM Signal Line.
DAB Signal Line.

- This schematic diagram may be modified at any time with the development of new technology.

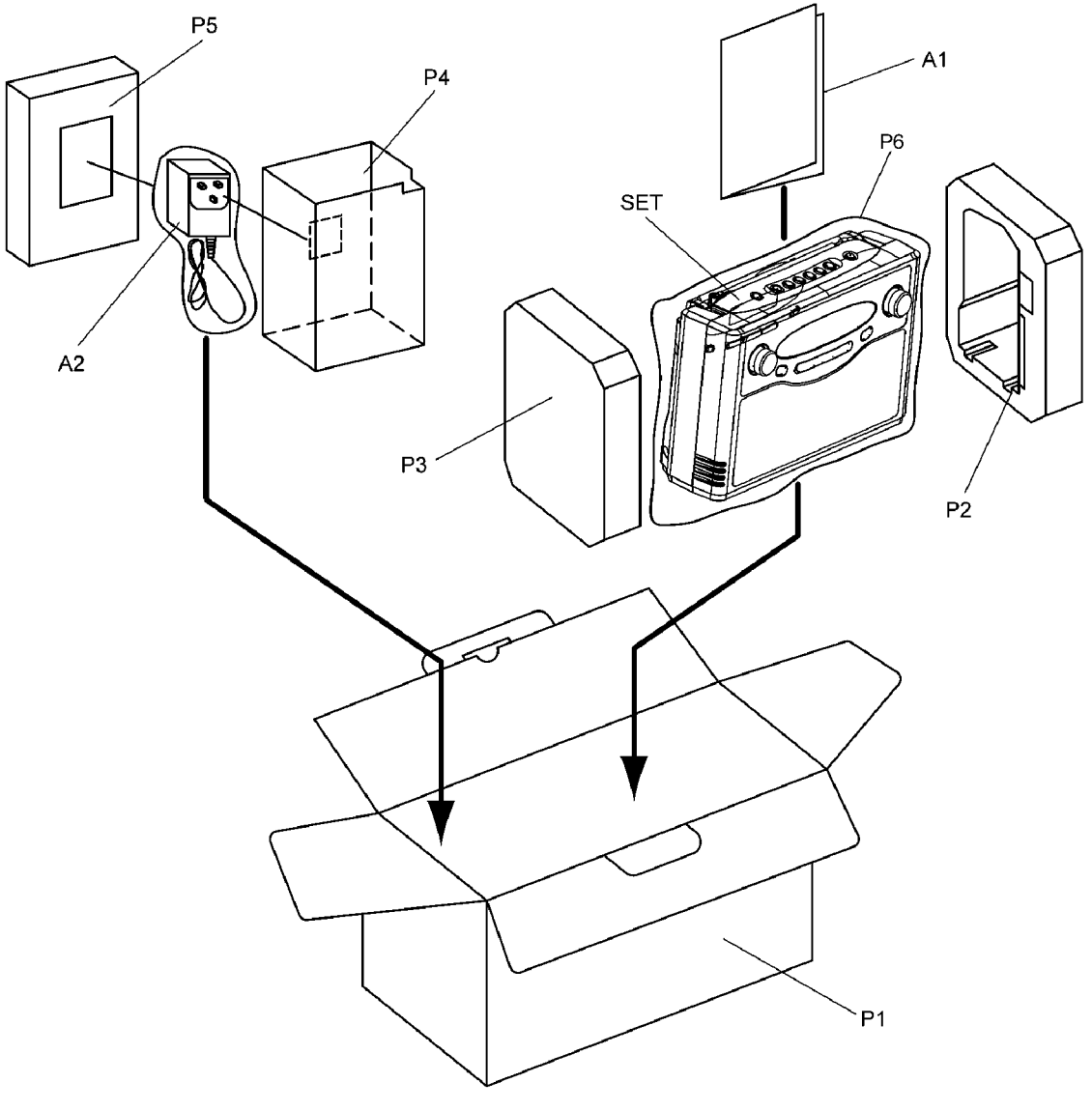
P5
P4
A1
P6
SET
A2
P3
P2
P1

A MAIN P.C.B.

Note:
This circuit board diagram may be modified at any time with the development of new technology.

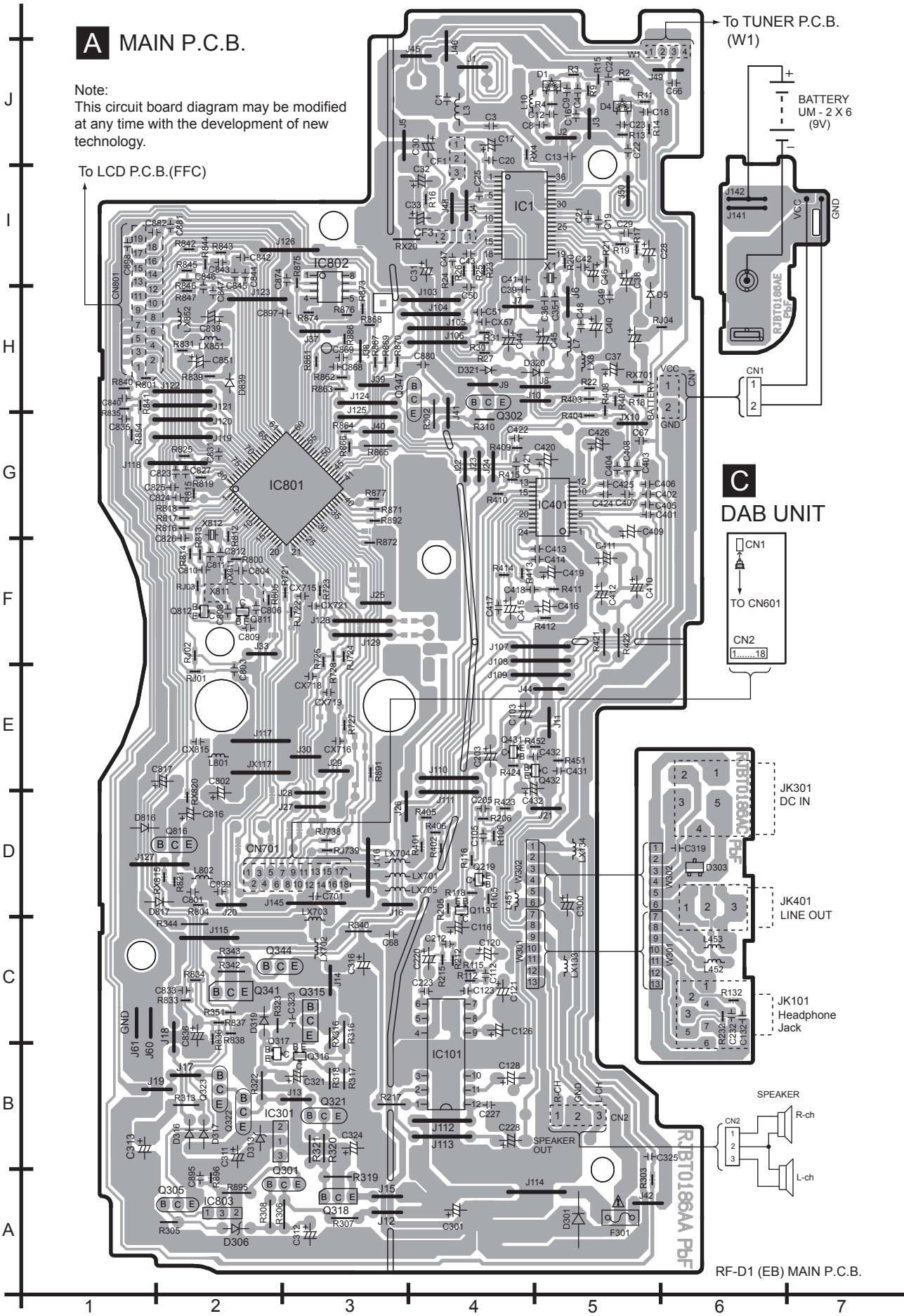

RF-D1 (EB) MAIN P.C.B.

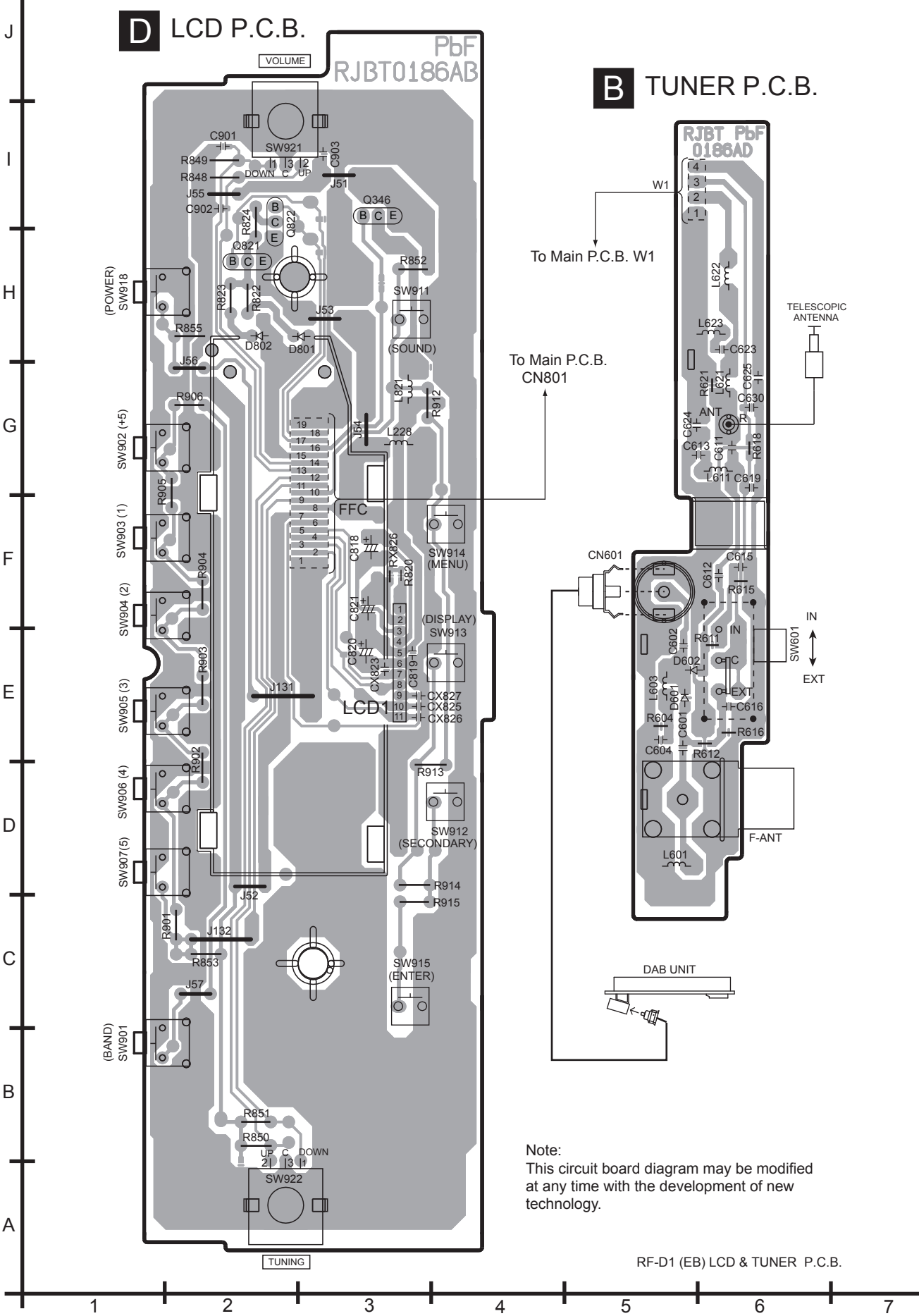

Note:
This circuit board diagram may be modified at any time with the development of new technology.

RF-D1 (EB) LCD & TUNER P.C.B.

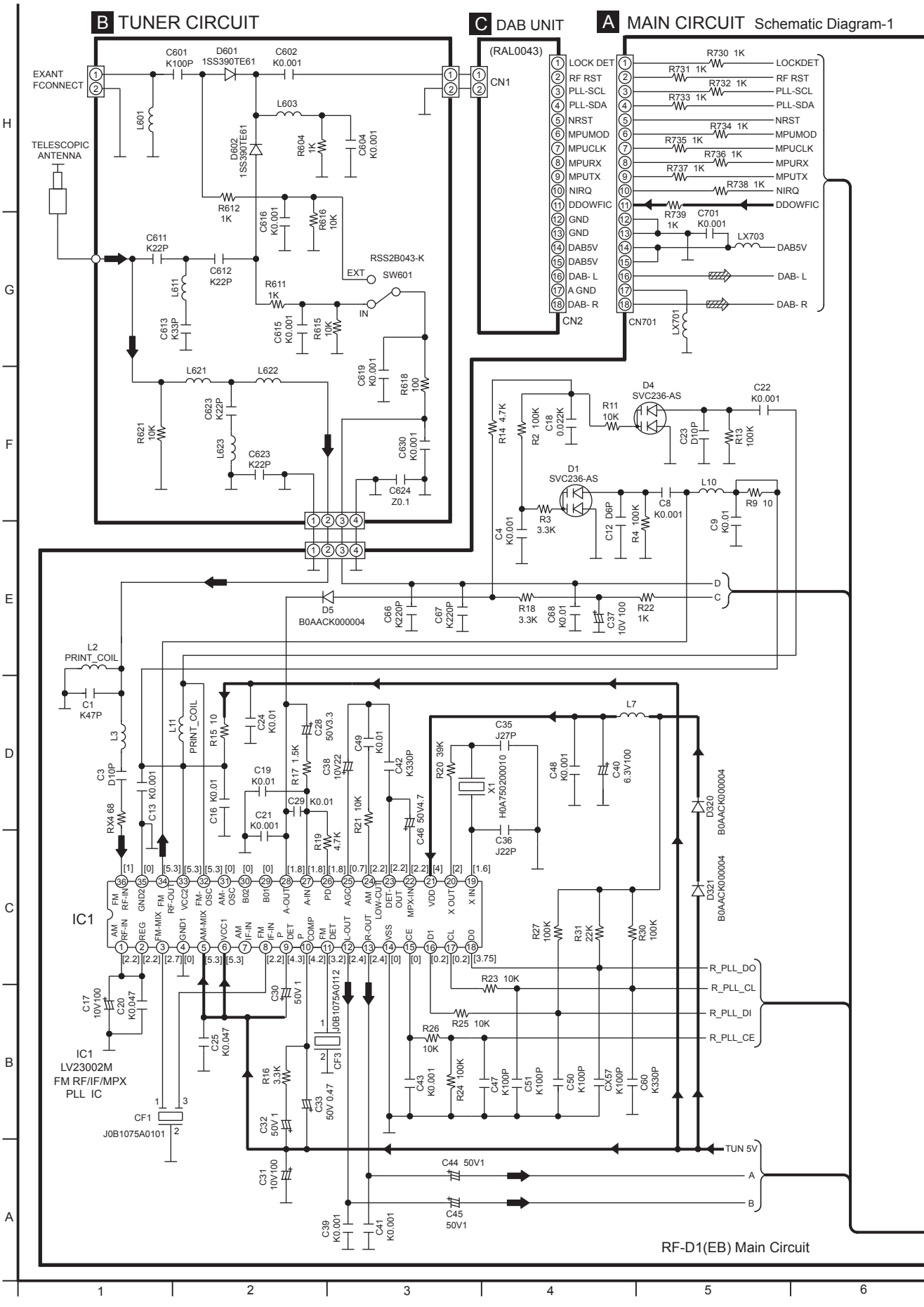
B TUNER CIRCUIT
C DAB UNIT
A MAIN CIRCUIT Schematic Diagram-1
(RAL0043)
EXANT FCONNECT
TELESCOPIC ANTENNA
C601 K100P
D601 1SS390TE61
C602 K0.001
L601
L603
D602 1SS390TE61
R604 1K
C604 K0.001
R612 1K
C616 K0.001
R616 10K
C611 K22P
C612 K22P
L611
C613 K33P
R611 1K
C615 K0.001
R615 10K
RSS2B043-K
EXT
SW601
IN
C619 K0.001
R618 100
L621
L622
R621 10K
C623 K22P
L623
C623 K22P
C630 K0.001
C624 Z0.1
CN1
CN2
LOCK DET
RF RST
PLL-SCL
PLL-SDA
NRST
MPUMOD
MPUCLK
MPURX
MPUTX
NIRQ
DDOWFIC
GND
GND
DAB5V
DAB5V
DAB- L
A GND
DAB- R
R730 1K
R731 1K
R732 1K
R733 1K
R734 1K
R735 1K
R736 1K
R737 1K
R738 1K
R739 1K
C701 K0.001
LX703
CN701
LX701
LOCKDET
RF RST
PLL-SCL
PLL-SDA
NRST
MPUMOD
MPUCLK
MPURX
MPUTX
NIRQ
DDOWFIC
DAB5V
DAB- L
DAB- R
D4 SVC236-AS
C22 K0.001
R14 4.7K
R2 100K
C18 0.022K
R11 10K
C23 D10P
R13 100K
D1 SVC236-AS
L10
R9 10
R3 3.3K
C12 D6P
R4 100K
C8 K0.001
C9 K0.01
C4 K0.001
D5 B0AACK000004
C66 K220P
C67 K220P
R18 3.3K
C68 K0.01
C37 10V 100
R22 1K
D
C
L2 PRINT_COIL
C1 K47P
L3
C3 D10P
RX4 68
C13 K0.001
L11 PRINT_COIL
R15 10
C16 K0.01
C24 K0.01
C28 50V3.3
C38 10V22
C49 K0.01
C42 K330P
C19 K0.01
C21 K0.001
C29 K0.01
R17 1.5K
R19 4.7K
R21 10K
C46 50V4.7
C35 J27P
R20 39K
X1 H0A750200010
C36 J22P
C48 K0.001
C40 6.3V100
L7
D320 B0AACK000004
D321 B0AACK000004
IC1
AM RF-IN
FM RF-IN
REG
GND2
FM-MIX
FM RF-OUT
VCC2
AM-MIX
FM-OSC
AM-OSC
GND1
VCC1
AM IF-IN
FM IF-IN
B02
B01
DET P
A-OUT
A-IN
COMP
PD
FM DET
AGC
L-OUT
R-OUT
AM LOW-CU
DET-OUT
VSS
MPX-IN
CE
VDD
D1
X OUT
CL
X IN
D0
R27 100K
R31 22K
R30 100K
R_PLL_DO
R_PLL_CL
R_PLL_DI
R_PLL_CE
R23 10K
R25 10K
R26 10K
C17 10V100
C20 K0.047
C30 50V 1
J0B1075A0112
CF3
C25 K0.047
IC1
LV23002M
FM RF/IF/MPX
PLL IC
R16 3.3K
C33 50V 0.47
R24 100K
C47 K100P
C51 K100P
C50 K100P
CX57 K100P
C60 K330P
CF1
J0B1075A0101
C32 50V 1
C31 10V100
TUN 5V
C44 50V1
C45 50V1
A
B
C39 K0.001
C41 K0.001
RF-D1(EB) Main Circuit

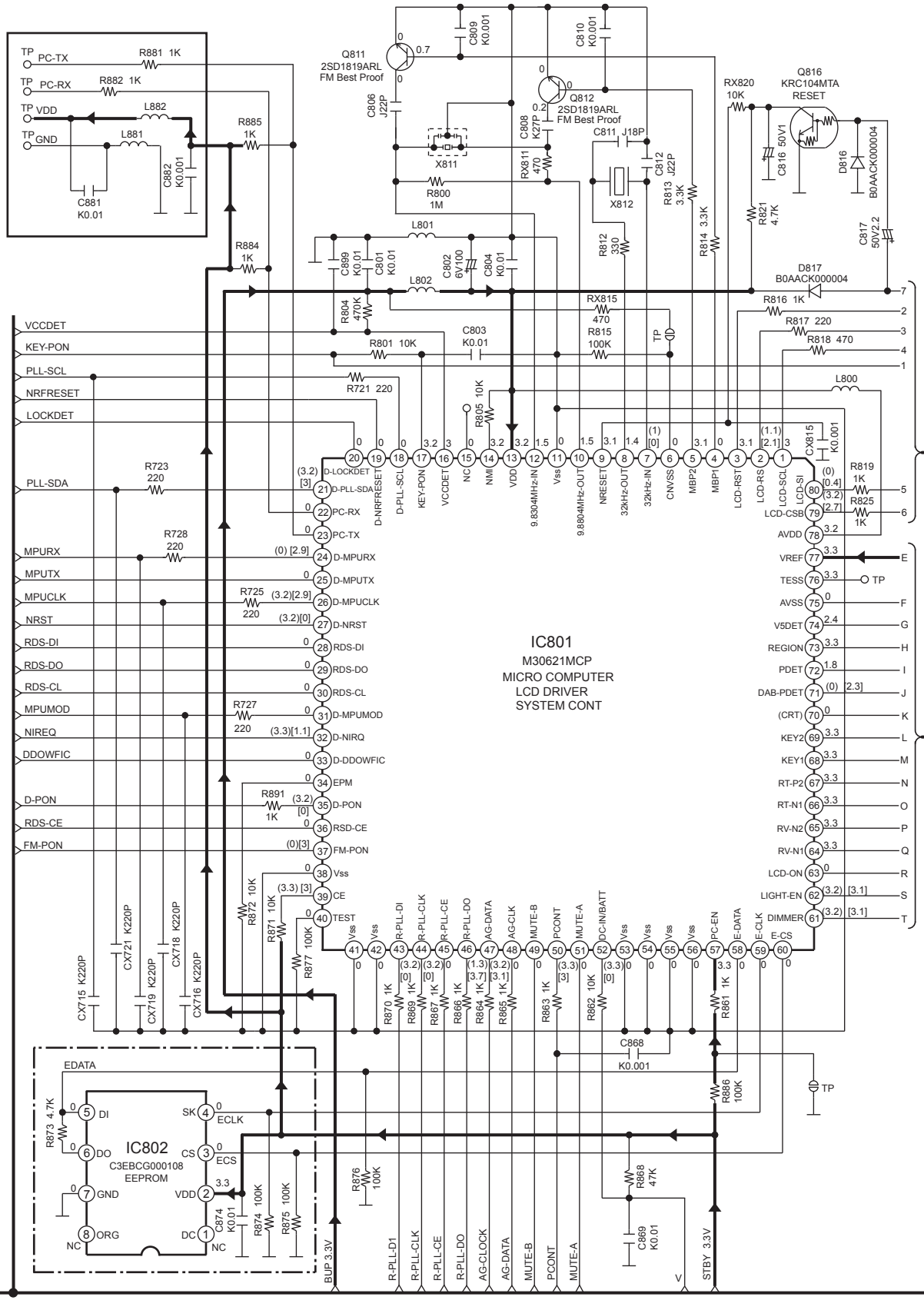

RF-D1(EB) Main Circuit

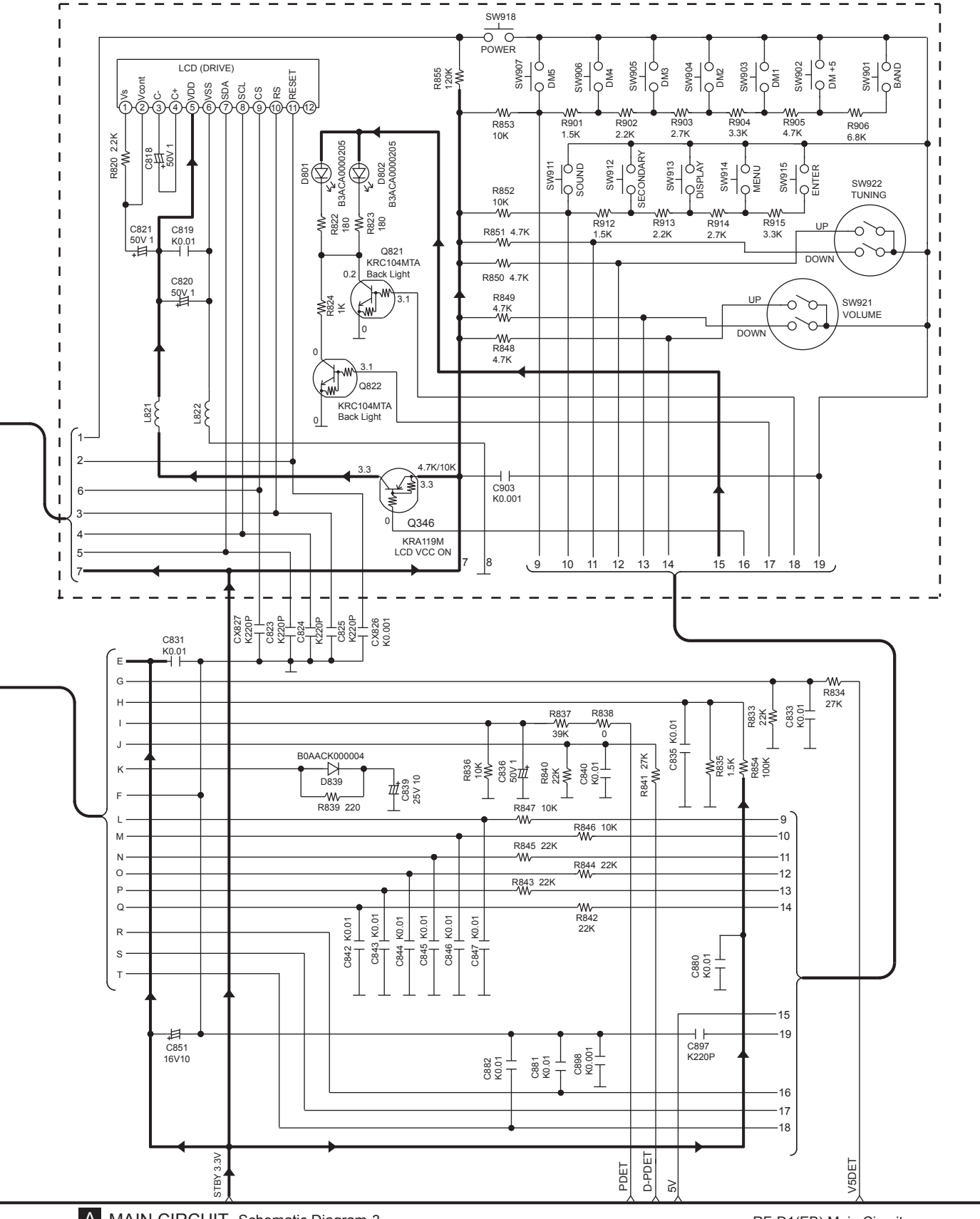
SW918
POWER
LCD (DRIVE)
Vs
Vcont
C-
C+
VDD
VSS
SDA
SCL
CS
RS
RESET
R855 120K
SW907 DM5
SW906 DM4
SW905 DM3
SW904 DM2
SW903 DM1
SW902 DM +5
SW901 BAND
R853 10K
R901 1.5K
R902 2.2K
R903 2.7K
R904 3.3K
R905 4.7K
R906 6.8K
R820 2.2K
C818 50V 1
D801 B3ACA0000205
D802 B3ACA0000205
SW911 SOUND
SW912 SECONDARY
SW913 DISPLAY
SW914 MENU
SW915 ENTER
SW922 TUNING
R852 10K
R912 1.5K
R913 2.2K
R914 2.7K
R915 3.3K
UP
DOWN
C821 50V 1
C819 K0.01
R822 180
R823 180
R851 4.7K
Q821 KRC104MTA Back Light
R850 4.7K
C820 50V 1
R824 1K
R849 4.7K
SW921 VOLUME
R848 4.7K
Q822 KRC104MTA Back Light
L821
L822
4.7K/10K
C903 K0.001
Q346 KRA119M LCD VCC ON
CX827 K220P
C823 K220P
C824 K220P
C825 K220P
CX826 K0.001
C831 K0.01
R834 27K
R837 39K
R838 0
C835 K0.01
R833 22K
C833 K0.01
B0AACK000004
D839
R839 220
C839 25V 10
R836 10K
C836 50V 1
R840 22K
C840 K0.01
R841 27K
R835 1.5K
R854 100K
R847 10K
R846 10K
R845 22K
R844 22K
R843 22K
R842 22K
C842 K0.01
C843 K0.01
C844 K0.01
C845 K0.01
C846 K0.01
C847 K0.01
C880 K0.01
C851 16V10
C882 K0.01
C881 K0.01
C898 K0.001
C897 K220P
STBY 3.3V
PDET
D-PDET
5V
V5DET

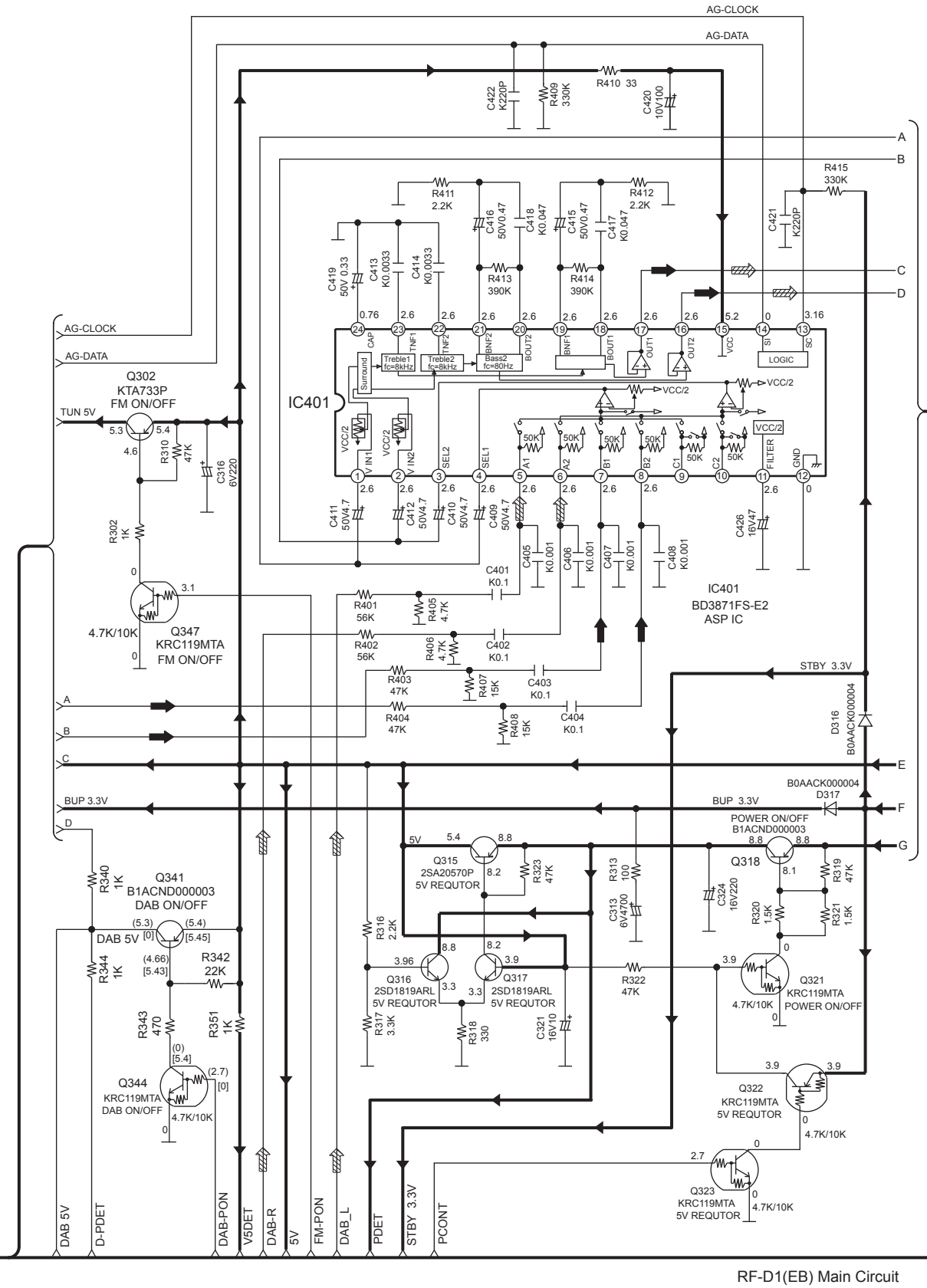
AG-CLOCK
AG-DATA
R410 33
C422 K220P
R409 330K
C420 10V100
R415 330K
C421 K220P
R411 2.2K
R412 2.2K
C416 50V0.47
C418 K0.047
C415 50V0.47
C417 K0.047
C419 50V 0.33
C413 K0.0033
C414 K0.0033
R413 390K
R414 390K
IC401
Treble1 fc=8kHz
Treble2 fc=8kHz
Bass2 fc=80Hz
Surround
LOGIC
VCC/2
Q302
KTA733P
FM ON/OFF
TUN 5V
R310 47K
C316 6V220
R302 1K
4.7K/10K
Q347
KRC119MTA
FM ON/OFF
C411 50V4.7
C412 50V4.7
C410 50V4.7
C409 50V4.7
C405 K0.001
C406 K0.001
C407 K0.001
C408 K0.001
C426 16V47
C401 K0.1
R401 56K
R405 4.7K
R402 56K
R406 4.7K
C402 K0.1
R403 47K
R407 15K
C403 K0.1
R404 47K
R408 15K
C404 K0.1
IC401
BD3871FS-E2
ASP IC
STBY 3.3V
D316
B0AACK000004
B0AACK000004
D317
BUP 3.3V
POWER ON/OFF
B1ACND000003
Q315
2SA20570P
5V REQUTOR
R323 47K
R313 100
C313 6V4700
Q318
C324 16V220
R319 47K
R320 1.5K
R321 1.5K
Q341
B1ACND000003
DAB ON/OFF
DAB 5V
R340 1K
R344 1K
R342 22K
R343 470
R351 1K
Q344
KRC119MTA
DAB ON/OFF
4.7K/10K
R316 2.2K
Q316
2SD1819ARL
5V REQUTOR
Q317
2SD1819ARL
5V REQUTOR
R317 3.3K
R318 330
C321 16V10
R322 47K
Q321
KRC119MTA
POWER ON/OFF
Q322
KRC119MTA
5V REQUTOR
Q323
KRC119MTA
5V REQUTOR
DAB 5V
D-PDET
DAB-PON
V5DET
DAB-R
5V
FM-PON
DAB_L
PDET
STBY 3.3V
PCONT

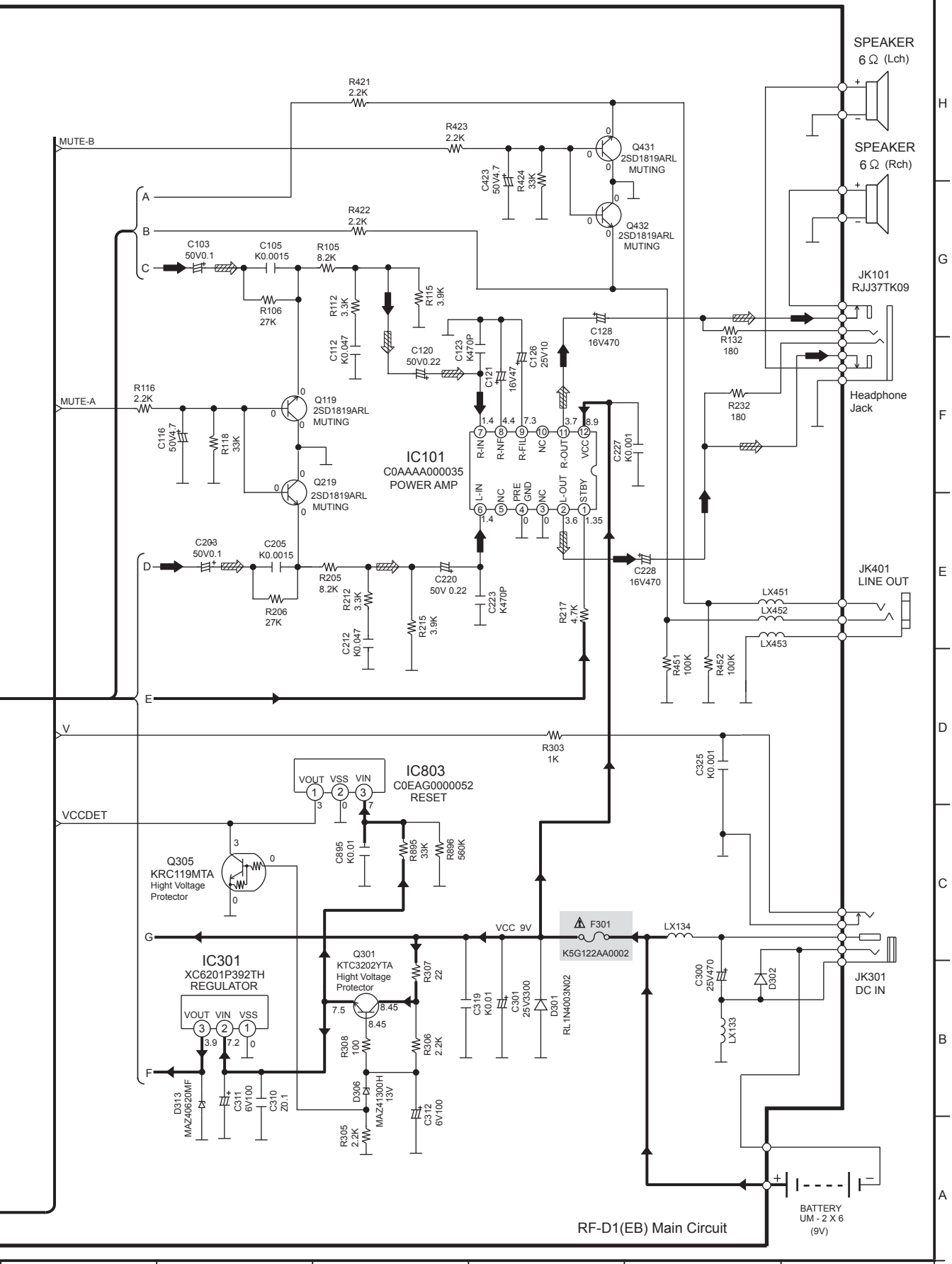
SPEAKER
6 Ω (Lch)
SPEAKER
6 Ω (Rch)
JK101
RJJ37TK09
Headphone
Jack
JK401
LINE OUT
JK301
DC IN
MUTE-B
MUTE-A
VCCDET
R421
2.2K
R423
2.2K
R422
2.2K
Q431
2SD1819ARL
MUTING
Q432
2SD1819ARL
MUTING
C423
50V4.7
R424
33K
C103
50V0.1
C105
K0.0015
R105
8.2K
R106
27K
R112
3.3K
R115
3.9K
C112
K0.047
C120
50V0.22
C123
K470P
C121
16V47
C126
25V10
C128
16V470
R132
180
R232
180
R116
2.2K
C116
50V4.7
R118
33K
Q119
2SD1819ARL
MUTING
Q219
2SD1819ARL
MUTING
IC101
C0AAAA000035
POWER AMP
R-IN
R-NF
R-FIL
NC
R-OUT
VCC
L-IN
NC
PRE GND
NC
L-OUT
STBY
C227
K0.001
C203
50V0.1
C205
K0.0015
R205
8.2K
R206
27K
R212
3.3K
C212
K0.047
R215
3.9K
C220
50V 0.22
C223
K470P
C228
16V470
R217
4.7K
LX451
LX452
LX453
R451
100K
R452
100K
R303
1K
C325
K0.001
IC803
C0EAG0000052
RESET
VOUT VSS VIN
C895
K0.01
R895
33K
R896
560K
Q305
KRC119MTA
Hight Voltage
Protector
VCC 9V
F301
K5G122AA0002
LX134
IC301
XC6201P392TH
REGULATOR
VOUT VIN VSS
Q301
KTC3202YTA
Hight Voltage
Protector
R307
22
R308
100
R306
2.2K
R305
2.2K
D306
MAZ41300H
13V
C312
6V100
C319
K0.01
C301
25V3300
D301
RL1N4003N02
C300
25V470
D302
LX133
D313
MAZ40620MF
C311
6V100
C310
Z0.1
BATTERY
UM - 2 X 6
(9V)
RF-D1(EB) Main Circuit

Before requesting service, make the below checks. If you are in doubt about some of the check points, or if the remedies indicated in the chart do not solve the problem, consult your dealer for instructions.

No sound or there is a lot of noise.	• Keep this unit away from mobile telephones. • Turn the volume up. • Switch off the unit, determine and correct the cause, then switch the unit on.
Humming heard during play.	• An AC adaptor or fluorescent light is near the cables. Keep other appliances and cords away from this unit's cables.
A beat sound is heard while receiving a radio broadcast.	• Turn the TV off or separate it from the unit.
The picture on the television near the set disappears or stripes appear on the screen.	• The location and orientation of the antenna are incorrect. • The TV antenna wire is too close to the unit. Separate the antenna wire of the TV set from the unit.
DAB reception is poor.	• Keep the antenna away from computers, televisions, other cables and cords. • Use an outdoor antenna.
DAB reception does not work.	• Check the DAB antenna selector switch.

Display

– –:– –	• You plugged the AC adaptor in or used batteries if the AC adaptor was not connected for the first time or there was a power failure recently. Set the time.
ERROR	• Incorrect operation performed. Read the instructions and try again.
NO SERVICE	• The station is currently not broadcasting.
NO SIGNAL	• This station cannot be received. Check your antenna.
DATA	• Data broadcast being received over the DAB broadcast signal cannot be used on this unit.
SCRAMBLED	• The broadcast station being received cannot be accessed (E.g. pay per use etc.).
Scan Failed.	• Stations are not receivable. Check your antenna and try Auto scanning.
F □□ (□□ indicates a number.)	• Turn the unit off, disconnect the AC adaptor, and consult your dealer.
STATION FULL	• DAB station memory is full. Use the following method to clear station memory. **1. Press MENU.** **2. Select "STATION CLEAR" with TUNING.** **3. Press ENTER/TIMER CHECK. "OK? Push ENTER" is displayed.** **4. Press ENTER/TIMER CHECK.** Station memory is erased and the unit automatically begins Auto scanning.

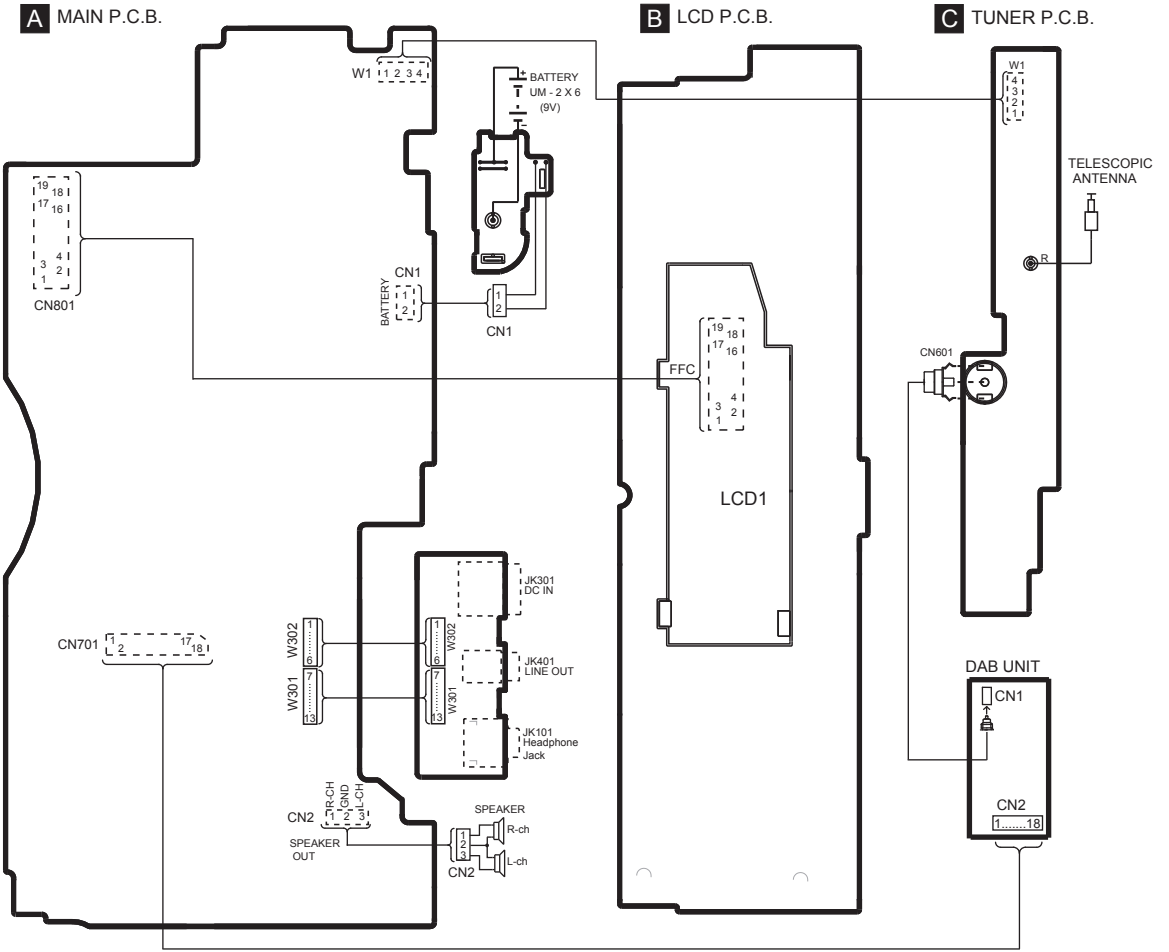
A MAIN P.C.B.
B LCD P.C.B.
C TUNER P.C.B.
W1
1 2 3 4
BATTERY
UM - 2 X 6
(9V)
CN801
CN1
BATTERY
CN1
FFC
LCD1
W1
TELESCOPIC
ANTENNA
R
CN601
JK301
DC IN
JK401
LINE OUT
JK101
Headphone
Jack
CN701
W302
W301
CN2
R-CH
GND
L-CH
SPEAKER
OUT
SPEAKER
R-ch
L-ch
CN2
DAB UNIT
CN1
CN2
1.....18