NATIONAL PANASONIC

Service Manual

ORDER NO. RD-410A

Supplementary

NATIONAL PANASONIC'S FINEST!
UNIQUE 11-BAND PORTABLE RADIO
MODEL RF-5000 or B

ATTENTION

Model RF-5000·····AC adaptor (Model RD-9450) is optionally available and is not incorporated in the radio.

Model RF-5000 B·····Incorporates AC adaptor (Model RD-9450) in the radio.

〈EXPORT DIVISION〉
MATSUSHITA ELECTRIC TRADING CO., LTD.
P. O. Box 288, Central Osaka, Japan

MATSUSHITA ELECTRIC INDUSTRIAL CO., LTD.
RADIO DIVISION

SPECIFICATIONS

Frequency Range:	FM	76~108 Mc/s
	LW	150~400 kc/s (2000~750 m)
	MW	525~1605 kc/s (571~187 m)
	SW_1	1.6~4.5 Mc/s (187~66.7 m)
	SW_2	4.5~6.5 Mc/s (66.7~46.2 m)
	SW_3	6.5~9.0 Mc/s (46.2~33.3 m)
	SW_4	9.0~12 Mc/s (33.3~25 m)
	SW_5	12~16 Mc/s (25~18.7 m)
	SW_6	16~20 Mc/s (18.7~15 m)
	SW_7	20~25 Mc/s (15~12 m)
	SW_8	25~30 Mc/s (12~10 m)
Intermediate Frequency:	FM	10.7 Mc/s
	AM	455 kc/s
Transistors:	2SC429	FM RF Amplifier
	2SC469	FM Oscillator
	2SC185	FM Mixer
	2SC469	FM 1st IF Amplifier
	2SC469	FM 2nd IF Amplifier
	2SC469	FM 3rd IF Amplifier
	2SC469	FM 4th IF Amplifier
	2SC185	AM RF Amplifier
	2SC185	AM Oscillator
	2SC184	AM Mixer
	2SC183	AM 1st IF Amplifier
	2SC183	AM 2nd IF Amplifier
	2SC183	AM BFO
	2SB173	AF Pre-Amplifier
	2SB345	1st AF Amplifier
	2SB345	2nd AF Amplifier
	2SB345	3rd AF Amplifier
	2SB324, 2SB324	Power Amplifier (push-pull)
Diodes:	SC-15	FM AFC
	OA90	FM AGC
	OA90	Detector for Tuning (FM) Indicator
	OA79, OA79	FM Detector
	1S1211, 1S1211	AM Operation Compensator
	1S1211, 1S1211	FM Operation Compensator
	OA90	AM Detector & AGC
	1S1211, 1S1211	AM Operation Compensator
	OA90	ANL
Sensitivity:	FM	0.5μV for 50mW Output
	LW	70μV/m for 50mW Output
	MW	50μV/m for 50mW Output
	SW_1	20μV/m for 50mW Output
	SW_2	10μV for 50mW Output
	SW_3	10μV for 50mW Output
	SW_4	10μV for 50mW Output
	SW_5	10μV for 50mW Output
	SW_6	10μV for 50mW Output
	SW_7	10μV for 50mW Output
	SW_8	10μV for 50mW Output
Power Output:	1.2W	Undistorted
	2W	Maximum
Batteries:	9V (Six "D" size flashlight batteries) (NATIONAL UM-1 or equivalent)	
Speakers:	18cm×12cm (7″×5″) Oval PM Dynamic Speaker & 12cm (5″) PM Dynamic Speaker (16Ω & 16Ω)	
Cabinet Dimensions:	424(Wide)×296(High)×146(Deep) mm (16 11/16″×11 21/32″×5 3/4″)	
Weight:	9.5kg. (20 lb. 15 oz.) with batteries	

DISASSEMBLY INSTRUCTIONS

To Remove Chassis (Refer to Figs. 1 & 2)

1. Remove cabinet front cover.
2. Remove five (5) control knobs from cabinet.
3. Raise the frame antenna upwards.
4. Set battery compartment cover mounting screw to "OPEN", and open the battery compartment cover.
5. Remove two (2) red cabinet back cover mounting screws (Nos. 2 & 4) as illustrated in Fig. 1.
6. Remove BFO pitch control knob.
7. Remove two (2) red battery case mounting screws (Nos. 6 & 7) as illustrated in Fig. 1.
8. Remove four (4) chassis & chassis cover mounting screws (Nos. 1, 3, 5 & 8) as illustrated in Fig. 1.
9. Pull out plugs.
10. Remove five (5) red chassis mounting screws (Nos. 1~5) as illustrated in Fig. 2.
11. Pull out the telescoping whip antenna upwards.
12. Remove chassis from cabinet.
13. To reassemble, reverse the above procedure.

Note: When mounting fine tuning knob, set red marking of fine tuning shaft facing up and insert fine tuning knob on to the shaft, aligning knob's marking to the central big mark on the panel.

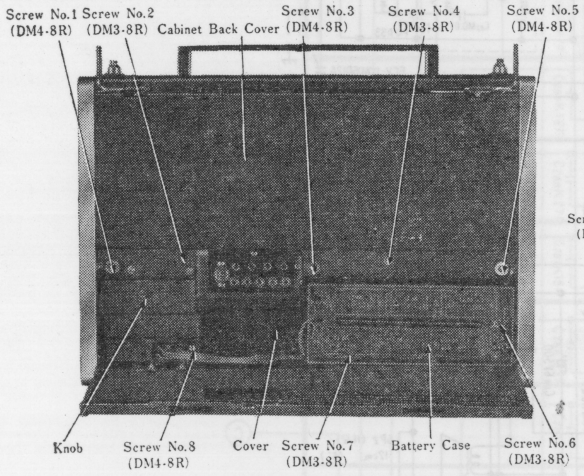

Fig. 1

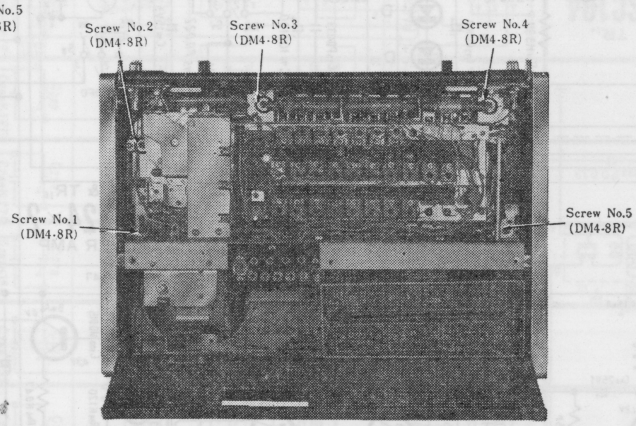

Fig. 2

Replacement of Band Selector Pin (Refer to Figs. 3 & 4)

1. Remove four (4) dial scale & back plate mounting screws, Nos. 1~4, as illustrated in Fig. 3.
2. Remove two (2) pin bracket mounting screws, Nos. 1~2, as illustrated in Fig. 4.
3. Mount new pin reversing step 2. (Keep FM band selector button in unpressed position.)

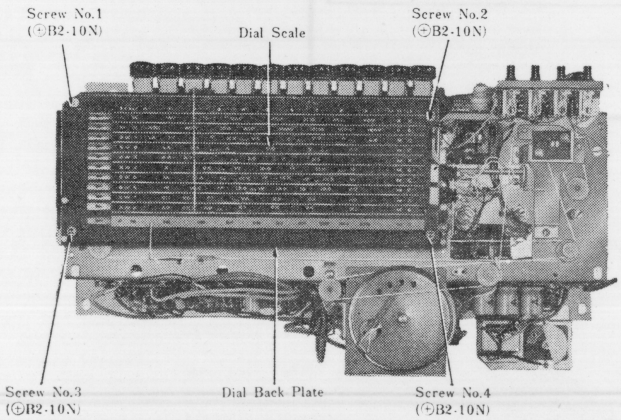

Fig. 3

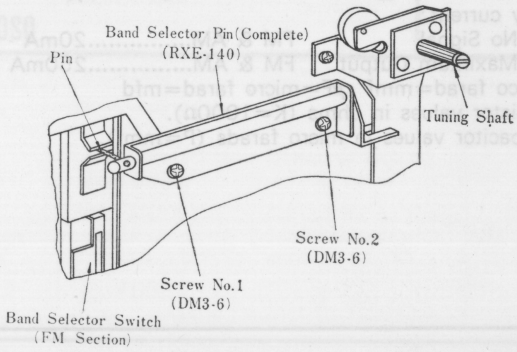

Fig. 4

To Remove Band Selector Switch (Refer to Figs. 3 & 5~7)

1. Remove four (4) dial scale & back plate mounting screws, Nos. 1~4, as illustrated in Fig. 3.
2. Remove screw ① (Fig. 5).
3. Remove stopper bracket ② (Fig. 5)
4. Pull buttons in the direction of arrow mark ③ (Fig. 5)
5. Remove the moving piece ④ (Fig. 6).
6. To reassemble, set moving contacts (shown in black) to upper terminal with pincette as illustrated in Fig. 7, and reverse the above procedure.

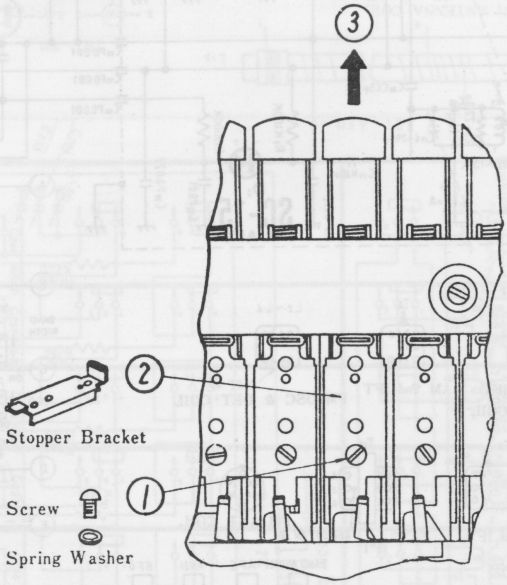

Fig. 5

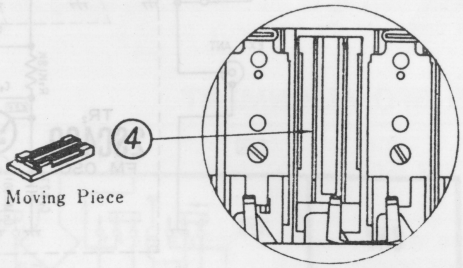

Fig. 6

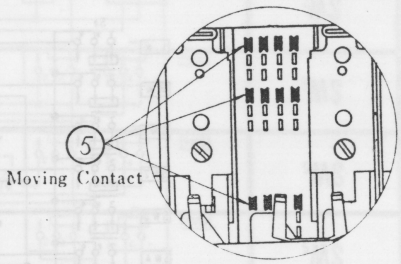

Fig. 7

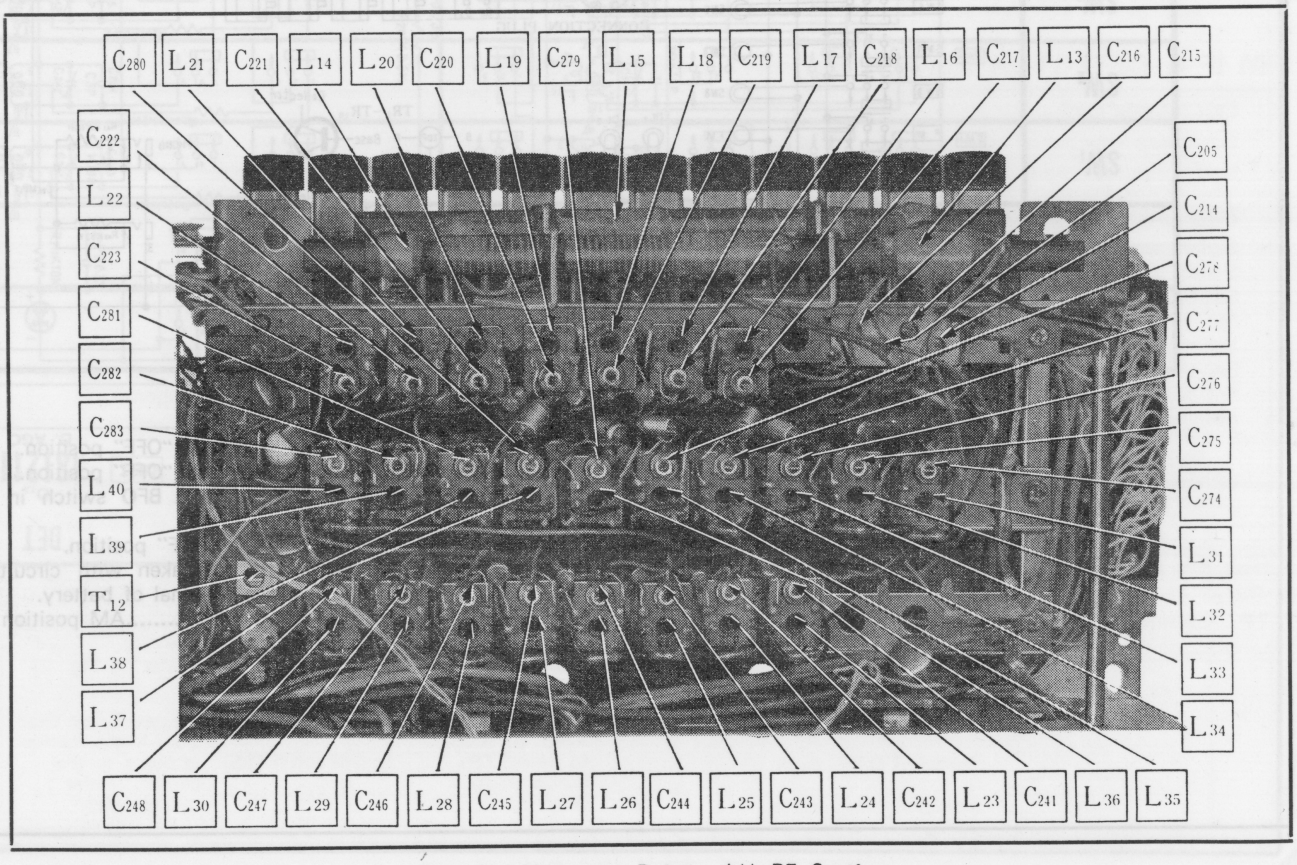

Fig. 8 Alignment Points - AM RF Section

ALIGNMENT INSTRUCTIONS

Alignment Points

1. For alignment points of MW and FM bands, use distance from starting point corresponding to each alignment frequency as shown in the table.
2. For alignment points other than MW and FM bands, use frequency marking of the dial scale by setting the dial pointer to the center of the frequency marking.

TABLE

Band	Frequency	Distance from "Start Point"	
MW	550 kc/s	15.3mm	19/32″
	1500 kc/s	147.9mm	5 13/16″
FM	77 Mc/s	22.6mm	7/8″
	106 Mc/s	145.3mm	5 23/32″

AM IF & BFO ALIGNMENT

Output of signal generator should be no higher than necessary to obtain an output reading.
Set volume control to maximum.
Set bass control to center.
Set treble control to center.
Set band selector switch to MW.
Set power source voltage to 9 volts DC.
Set fine tuning gang to center.
Set BFO switch to OFF.
Set ANL switch to OFF.
Set AFC switch to OFF.
Set band width switch to wide.
Set MGC control to DX.
Set BFO pitch tuning gang to center.

	SIGNAL GENERATOR COUPLING	SIGNAL GENERATOR FREQUENCY	RADIO DIAL SETTING	INDICATOR	ADJUSTMENT	REMARKS
1	Fashion loop of several turns of wire and radiate signal into loop of receiver.	455 kc/s (400∿ Mod.)	Point of noninterference (on/about 600 kc/s).	Output meter across voice coil.	T_{12} (AM 1st IFT) T_8 (AM 2nd IFT) T_9 (AM 3rd IFT)	Adjust for maximum output.
2	〃	〃	〃	〃	L_8 (BFO OSC Coil)	Receive 455 kc/s signal and tune for maximum output. Set BFO switch to ON and adjust L_8 to obtain zero beat.

Note: Make certain that maximum output is obtained when BFO pitch control is turned counter-clockwise or clockwise and zero beat is obtained at the center setting point.

FM IF & DETECTOR ALIGNMENT WITH OSCILLOSCOPE

OSCILLOSCOPE

Set sweep selector of oscilloscope to "External Sweep". Apply 60∿ sweep signal from sweep generator to horizontal input terminal of oscilloscope.

EQUIPMENT REQUIRED

Signal generator that provides 10.7 Mc/s marker.
Sweep generator that provides 10.7 Mc/s center frequency and 400 kc/s sweep width.
Set band selector switch to FM.
Set volume control to minimum.
Set bass control to center.
Set treble control to center.
Set AFC switch to OFF.
Set power source voltage to 9 volts DC.
Set fine tuning gang to center.
Set BFO switch to OFF.
Set ANL switch to OFF.
Set band width switch to wide.
Set MGC control to DX.
Set BFO pitch tuning gang to center.

Note: Unsolder lead between test point TP_2 and Point A before alignment and resolder after alignment.

	SWEEP GENERATOR COUPLING	SIGNAL GENERATOR COUPLING	RADIO DIAL SETTING	INDICATOR	ADJUSTMENT	REMARKS
1	High side thru. .001μF to point **TP_1**. Common to chassis.	High side thru. .001μF to point **TP_1**. Common to chassis.	Point of noninterference (on/about 100 Mc/s).	Connect vert. Amp. of scope to point **TP_2**. Common to chassis.	T_1 (FM 1st IFT) (P) T_2 (FM 1st IFT) (S) T_3 (FM 2nd IFT) T_4 (FM 3rd IFT) T_5 (FM 4th IFT) T_6 (FM 5th IFT) (P)	Adjust for maximum amplitude and proper linearity between ±100kc/s markers. (Refer to Fig. 9)
2	〃	〃	〃	Connect vert. Amp. of scope to point **TP_3**. Common to chassis.	T_7 (FM 5th IFT) (S)	Adjust **T_7** so that 10.7 Mc/s marker appears at the center. (Refer to Fig. 10)

Note: When aligning the Radio Detector circuit, the wave form may appear as in Figs. 9 & 10 or upside-down.

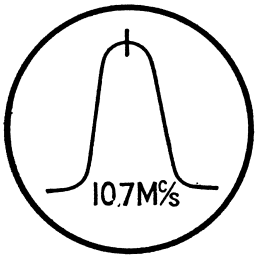

Fig. 9

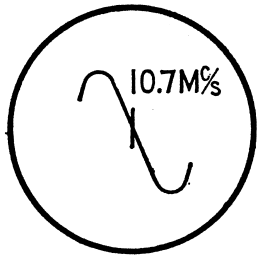

Fig. 10

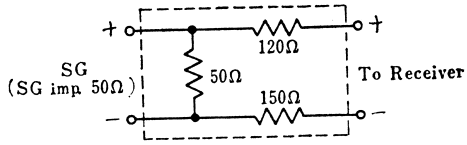

FM Dummy Antenna

Fig. 11

FM RF ALIGNMENT

Output of signal generator should be no higher than necessary to obtain an output reading.

Set volume control to maximum.
Set band selector switch to FM.
Set bass control to center.
Set treble control to center.
Set AFC switch to OFF.
Set power source voltage to 9 volts DC.
Set fine tuning gang to center.
Set BFO switch to OFF.
Set ANL switch to OFF.
Set band width switch to wide.
Set MGC control to DX.
Set BFO pitch tuning gang to center.

	SIGNAL GENERATOR COUPLING	SIGNAL GENERATOR FREQUENCY	RADIO DIAL SETTING	INDICATOR	ADJUSTMENT	REMARKS
3	Connect to twin lead wire through FM Dummy antenna. (Refer to Fig. 11)	77 Mc/s (400∿ Mod.)	77 Mc/s	Output meter across voice coil.	L_4 (FM OSC Coil) L_1 (FM ANT Coil) L_2 (FM DET (P) Coil) L_3 (FM DET (S) Coil)	Adjust for maximum output.
4	〃	106 Mc/s (400∿ Mod.)	106 Mc/s	〃	C_{16} (FM OSC Trimmer) C_2 (FM ANT Trimmer) C_{10} (FM DET (P) Trimmer) C_{14} (FM DET (S) Trimmer)	Adjust for maximum output. Repeat steps (3) and (4).

Note : As three output responses will be present, tuning is the center frequency.

AM RF ALIGNMENT

Output of signal generator should be no higher than necessary to obtain an output reading.

Set volume control to maximum.
Sat bass control to center.
Set treble control to center.
Set power source voltage to 9 volts DC.
Set BFO pitch tuning gang to center.
Set fine tuning gang to center.
Set BFO switch to OFF.
Set ANL switch to OFF.
Set band width switch to wide.
Set MGC control to DX.

	Band Switch Position	SIGNAL GENERATOR FREQUENCY	SIGNAL GENERATOR FREQUENCY	RADIO DIAL SETTING	INDICATOR	ADJUSTMENT	REMARKS
1	LW	Fashion loop of several turns of wire and radiate signal into loop of receiver.	150 kc/s (400∿ Mod.)	150 kc/s	Output meter across voice coil.	L_{31} (OSC Coil) L_{13} (ANT Coil)	Adjust for maximum output by sliding coil (L_{13}) along ferrite core.
2		〃	400 kc/s (400∿ Mod.)	400 kc/s	〃	C_{274} (OSC Trimmer) C_{214} (ANT Trimmer)	Adjust for maximum output. Repeat steps (1) and (2).
3	MW	〃	550 kc/s (400∿ Mod.)	550 kc/s	〃	L_{32} (OSC Coil) L_{14} (ANT Coil)	Adjust for maximum output by sliding coil (L_{14}) along ferrite core.
4		〃	1500 kc/s (400∿ Mod.)	1500 kc/s	〃	C_{275} (OSC Trimmer) C_{215} (ANT Trimmer)	Adjust for maximum output. Repeat steps (3) and (4).

	Band Switch Position	SIGNAL GENERATOR COUPLING	SIGNAL GENERATOR FREQUENCY	RADIO DIAL SETTING	INDICATOR	ADJUSTMENT	REMARKS
5	SW_1	Fashion loop of several turns of wire and radiate signal into loop of receiver.	1.6 Mc/s (400~ Mod.)	1.6 Mc/s	Output meter across voice coil.	L_{33} (OSC Coil) L_{15} (ANT Coil) L_{23} (DET Coil)	Adjust for maximum output by sliding coil (L_{15}) along ferrite core.
6		〃	4.5 Mc/s (400~ Mod.)	4.5 Mc/s	〃	C_{276} (OSC Trimmer) C_{216} (ANT Trimmer) C_{241} (DET Trimmer)	Adjust for maximum output. Repeat steps (5) and (6).
7	SW_2	Connect to AM EXT Antenna & Ground terminals thru. SW dummy antenna.	4.5 Mc/s (400~ Mod.)	4.5 Mc/s	〃	L_{34} (OSC Coil) L_{16} (ANT Coil) L_{24} (DET Coil)	Adjust for maximum output.
8		〃	6.5 Mc/s (400~ Mod.)	6.5 Mc/s	〃	C_{277} (OSC Trimmer) C_{217} (ANT Trimmer) C_{242} (DET Trimmer)	Adjust for maximum output. Repeat steps (7) and (8).
9	SW_3	〃	6.5 Mc/s (400~ Mod.)	6.5 Mc/s	〃	L_{35} (OSC Coil) L_{17} (ANT Coil) L_{25} (DET Coil)	Adjust for maximum output.
10		〃	9 Mc/s (400~ Mod.)	9 Mc/s	〃	C_{278} (OSC Trimmer) C_{218} (ANT Trimmer) C_{243} (DET Trimmer)	Adjust for maximum output. Repeat steps (9) and (10).
11	SW_4	〃	9 Mc/s (400~ Mod.)	9 Mc/s	〃	L_{36} (OSC Coil) L_{18} (ANT Coil) L_{26} (DET Coil)	Adjust for maximum output.
12		〃	12 Mc/s (400~ Mod.)	12 Mc/s	〃	C_{279} (OSC Trimmer) C_{219} (ANT Trimmer) C_{244} (DET Trimmer)	Adjust for maximum output. Repeat steps (11) and (12).
13	SW_5	〃	12 Mc/s (400~ Mod.)	12 Mc/s	〃	L_{37} (OSC Coil) L_{19} (ANT Coil) L_{27} (DET Coil)	Adjust for maximum output.
14		〃	16 Mc/s (400~ Mod.)	16 Mc/s	〃	C_{280} (OSC Trimmer) C_{220} (ANT Trimmer) C_{245} (DET Trimmer)	Adjust for maximum output. Repeat steps (13) and (14).
15	SW_6	〃	16 Mc/s (400~ Mod.)	16 Mc/s	〃	L_{38} (OSC Coil) L_{20} (ANT Coil) L_{28} (DET Coil)	Adjust for maximum output.
16		〃	20 Mc/s (400~ Mod.)	20 Mc/s	〃	C_{281} (OSC Trimmer) C_{221} (ANT Trimmer) C_{246} (DET Trimmer)	Adjust for maximum output. Repeat steps (15) and (16).

	Band Switch Position	SIGNAL GENERATOR COUPLING	SIGNAL GENERATOR FREQUENCY	RADIO DIAL SETTING	INDICATOR	ADJUSTMENT	REMARKS
17	SW_7	Connect to AM EXT Antenna & Ground terminals thru. SW dummy antenna.	20 Mc/s (400~ Mod.)	20 Mc/s	Output meter across voice coil.	L_{39} (OSC Coil) L_{21} (ANT Coil) L_{29} (DET Coil)	Adjust for maximum output.
18		〃	25 Mc/s (400~ Mod.)	25 Mc/s	〃	C_{282} (OSC Trimmer) C_{222} (ANT Trimmer) C_{247} (DET Trimmer)	Adjust for maximum output. Repeat steps (17) and (18).
19	SW_8	〃	25 Mc/s (400~ Mod.)	25 Mc/s	〃	L_{40} (OSC Coil) L_{22} (ANT Coil) L_{30} (DET Coil)	Adjust for maximum output.
20		〃	30 Mc/s (400~ Mod.)	30 Mc/s	〃	C_{283} (OSC Trimmer) C_{223} (ANT Trimmer) C_{248} (DET Trimmer)	Adjust for maximum output. Repeat steps (19) and (20).

Notes: 1. Cement antenna bobbin with wax after completing alignment.
2. Two signals may be received while adjusting oscillator coils. To adjust oscillator coil to the correct signal, set the core by turning downwards for SW_1~SW_4.
Converely, set the core by turning upwards for SW_5~SW_8.

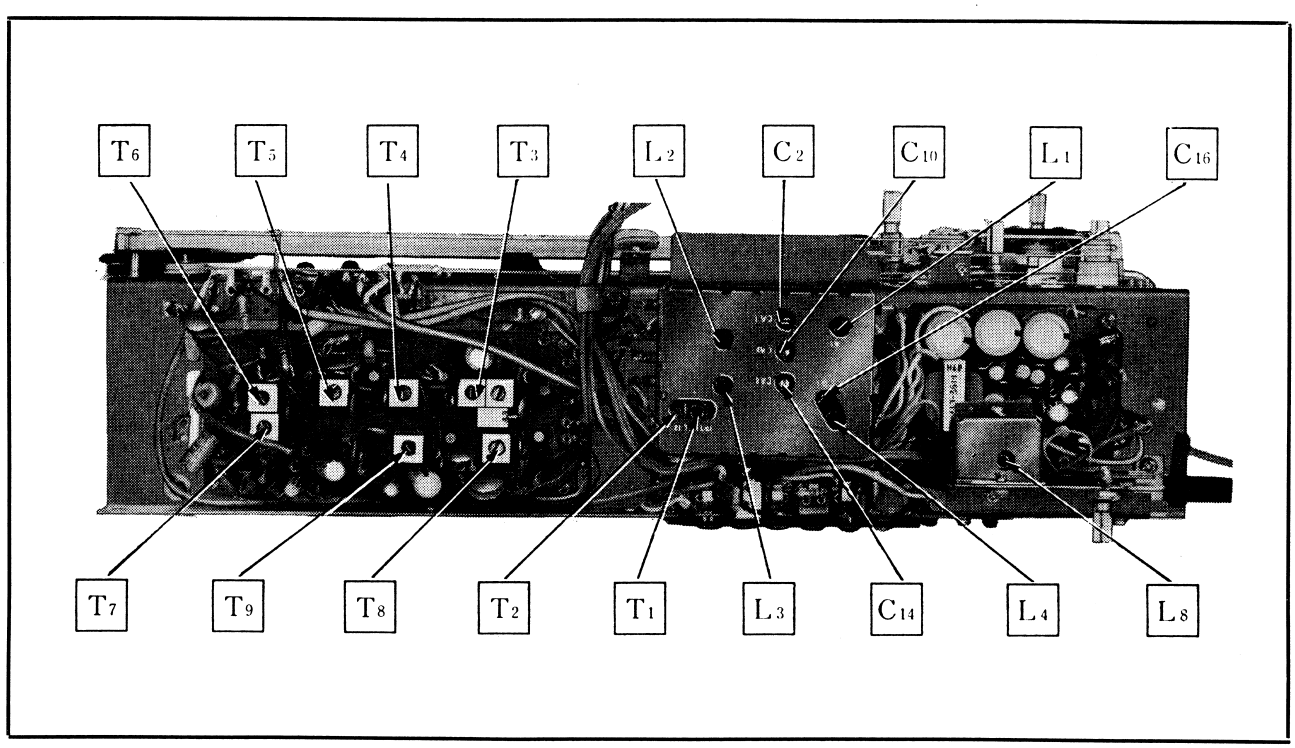

Fig. 13 Alignment Points - AM & FM IF, BFO & FM RF Section

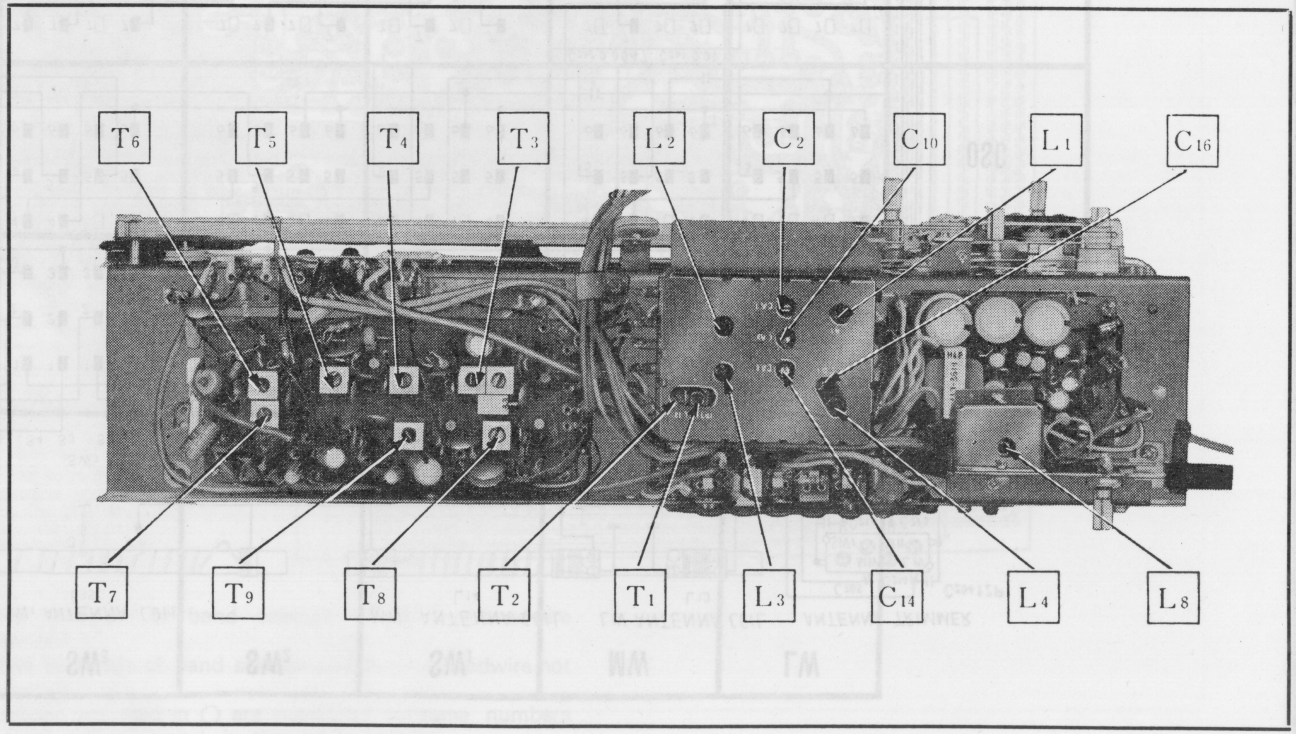

Fig. 13 Alignment Points - AM & FM IF, BFO & FM RF Section

Notes :

1. Remove four (4) dial scale & back plate mounting screws, Nos. 1~4, as illustrated in Fig. 3, on page 3, and remove dial scale & back plate.
2. Dial cord length is 90cm (35 7/16″).
3. Fasten dial cord to one end of the tension spring and attach the other end of tension spring to the chassis hole. Start stringing in numerical order (1~5) and fasten the dial cord end to the tension spring after removing the tension spring from the chassis hole.
4. Extend the tension spring to approximately 10~12mm (13/32″~15/32″).
5. Cement dial ends with lacquer.

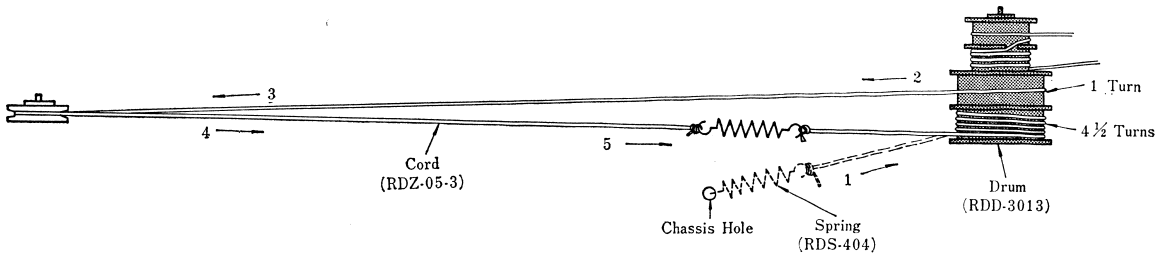

Notes :

1. Dial cord length is 120cm (47¼″).
2. AM tuning gang is positioned at minimum capacity.
3. Arrow marks (1~9) indicate correct order and direction of stringing dial cord.
4. Extend the tension spring to approximately 30~35mm (1 7/32″~1 3/8″).
5. Cement dial cord ends with lacquer.

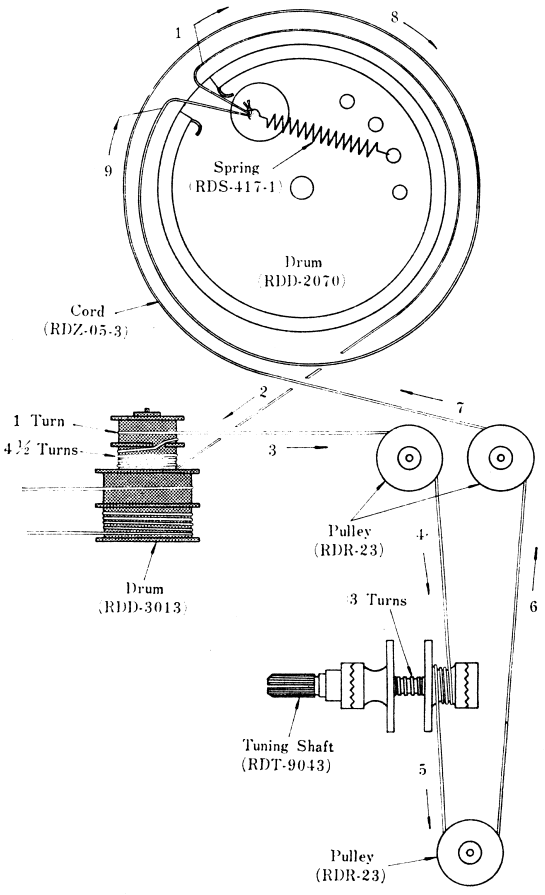

Fig. 15 Dial Cord Stringing Guide - AM Section

Notes :

1. Remove four (4) dial scale & back plate mounting screws, Nos. 1~4, as illustrated in Fig. 3 on page 3, and remove dial scale & back plate.
2. Dial cord length is 105cm (41 11/32").
3. Fasten dial cord to one end of the tension spring and attach the other end of tension spring to the chassis. Start stringing in numerical order (1~4) and fasten the dial cord end to the tension spring after removing the tension spring from the chassis.
4. Extend the tension spring to approximately 10~12 mm (13/32"~15/32").
5. Cement dial cord ends with lacquer.

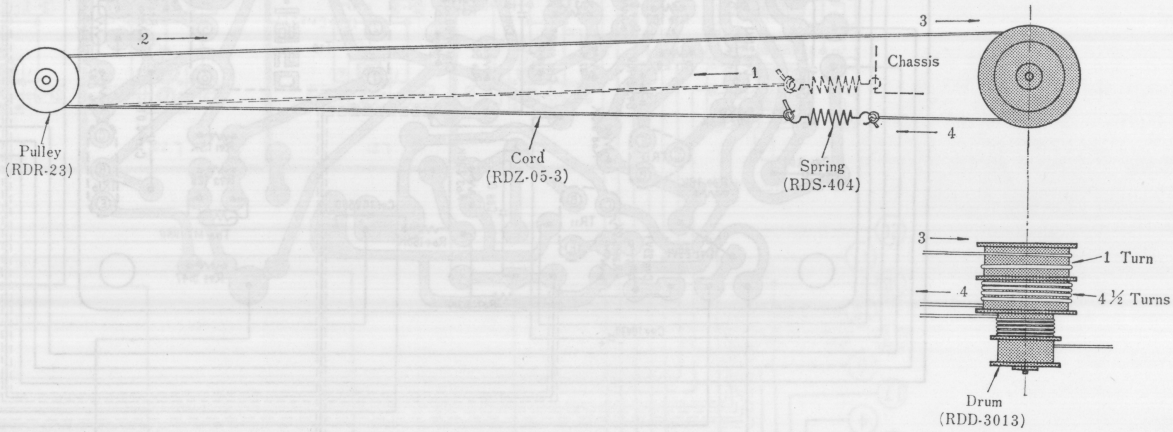

Notes :

1. Dial cord length is 150cm (59 1/16).
2. FM tuning gang is positioned at minimum capacity.
3. Arrow marks (1~7) indicate correct order and direction of stringing dial cord.
4. Extend the tension spring to approximately 30~35mm (1 7/32"~1 3/8").
5. Cement dial cord ends with lacquer.

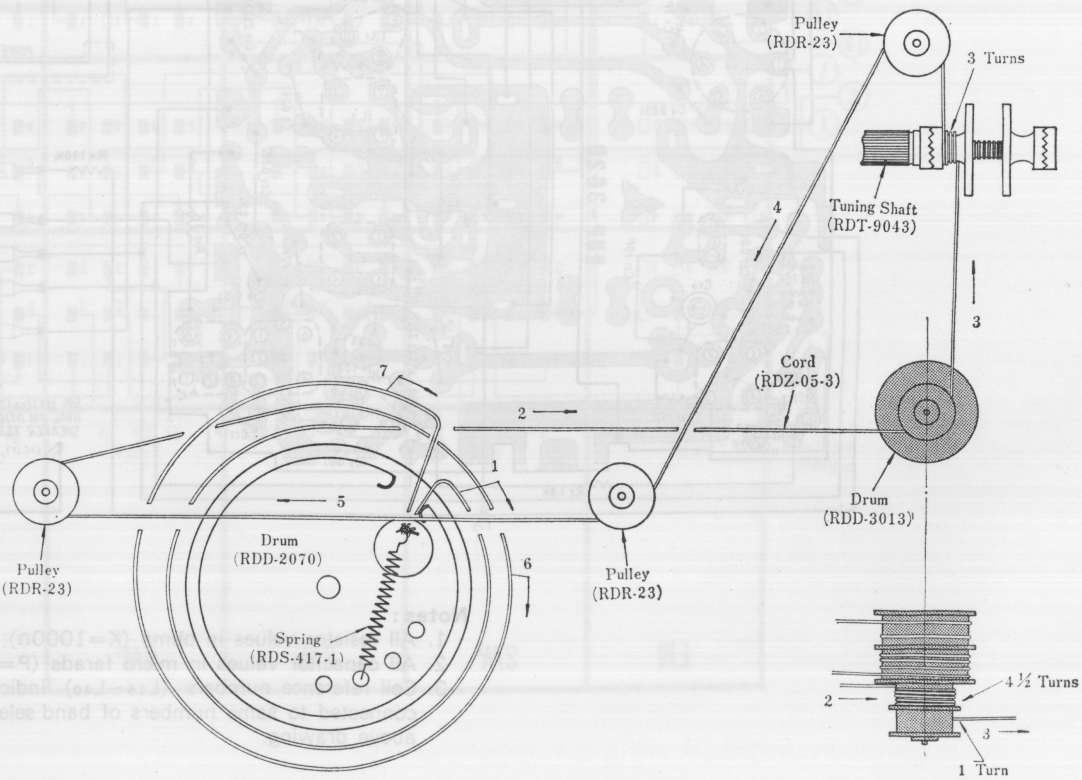

Fig. 16 Dial Cord Stringing Guide - FM Section

Notes :

1. Set AM & FM tuning gangs at maximum capacity.
2. Set AM & FM dial pointers to starting points of dial scale.
3. Attach dial cords to AM & FM dial pointers.
4. Set AM & FM dial pointers as illustrated in Fig. 17.
   AM Dial Pointer.....on cord ①
   FM Dial Pointer.....on cord ② & under cord ③
5. Cement dial cord to dial pointer with lacquer.

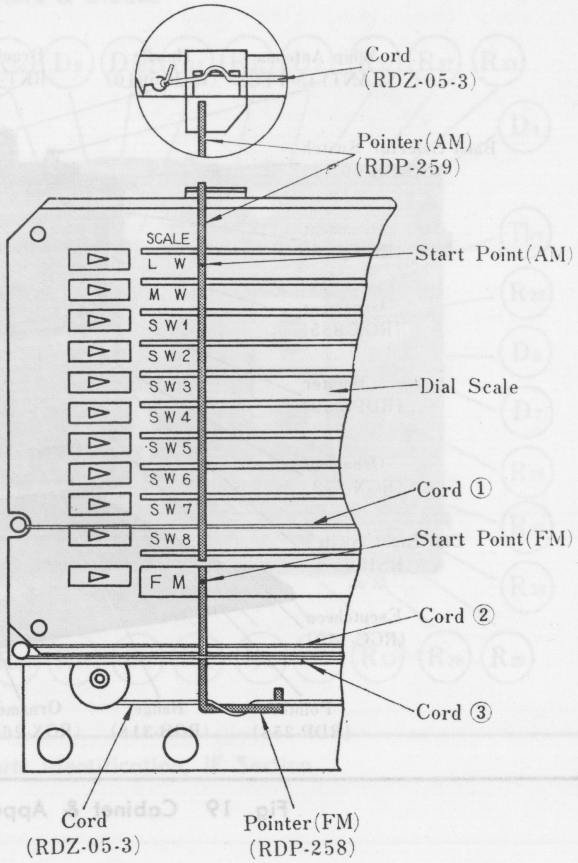

Fig. 17 To Mount Dial Pointer

Notes :

1. Cord length is 95cm (37 13/32″).
2. Tie cord to shaft ① and start stringing in numerical order (1~6), and attach spring.
3. Cement cord knot with lacquer.

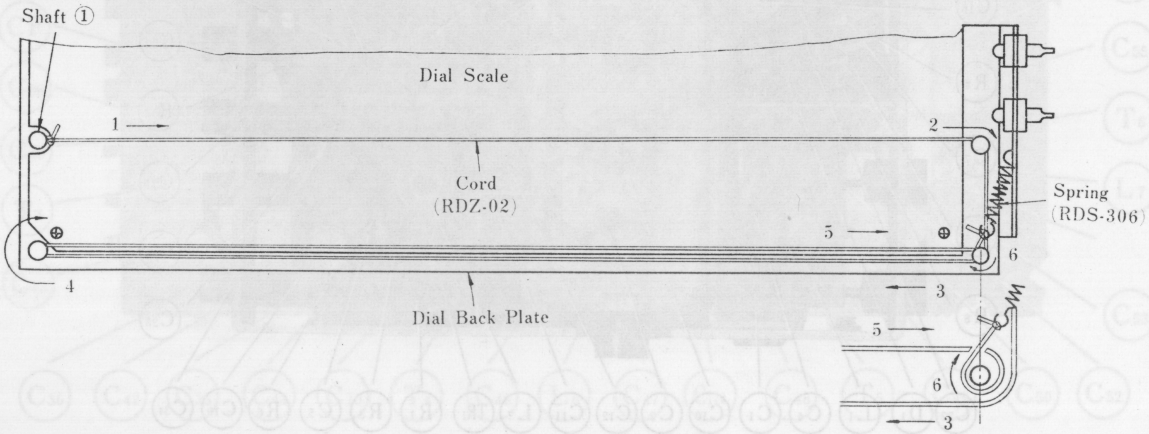

Fig. 18 Cord Stringing Guide

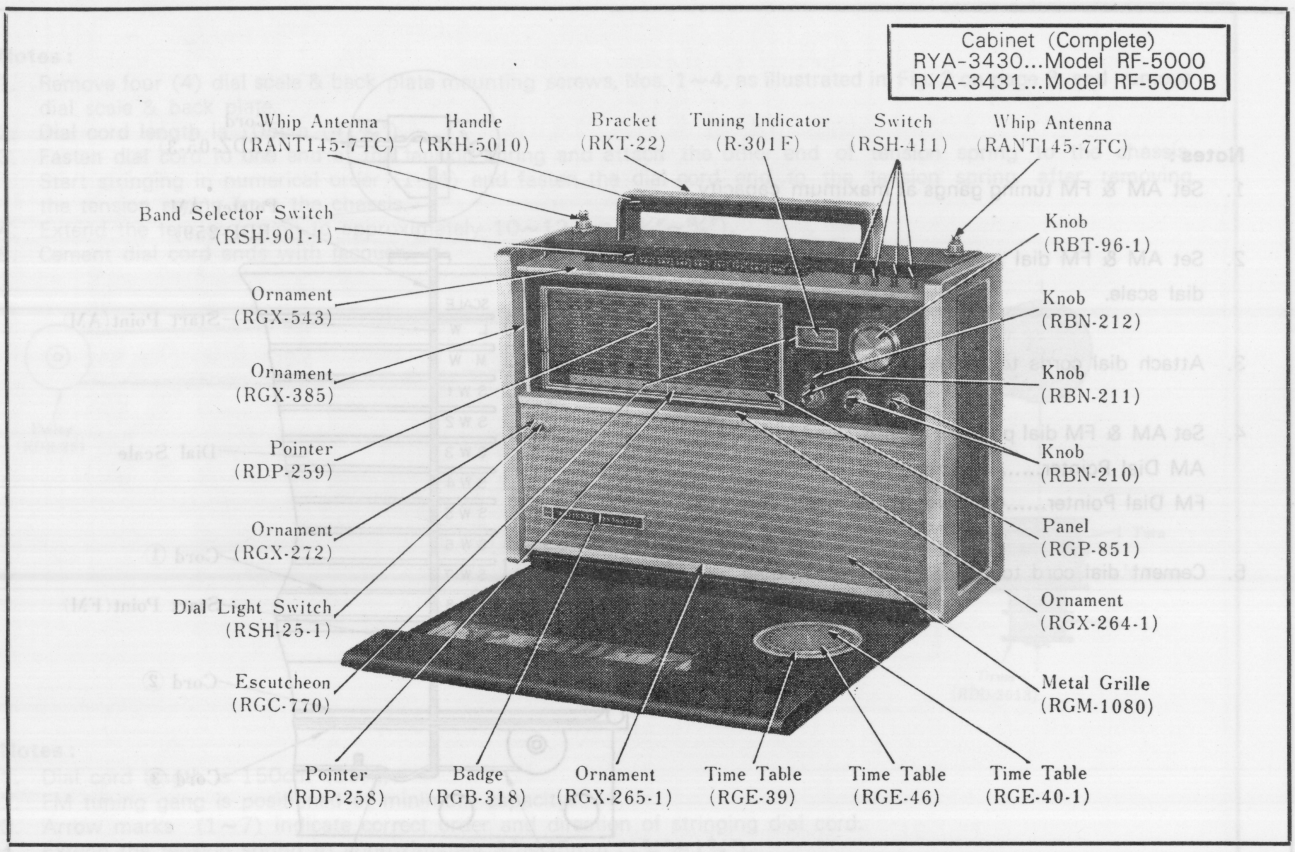

Fig. 19 Cabinet & Appearance - Parts Identification

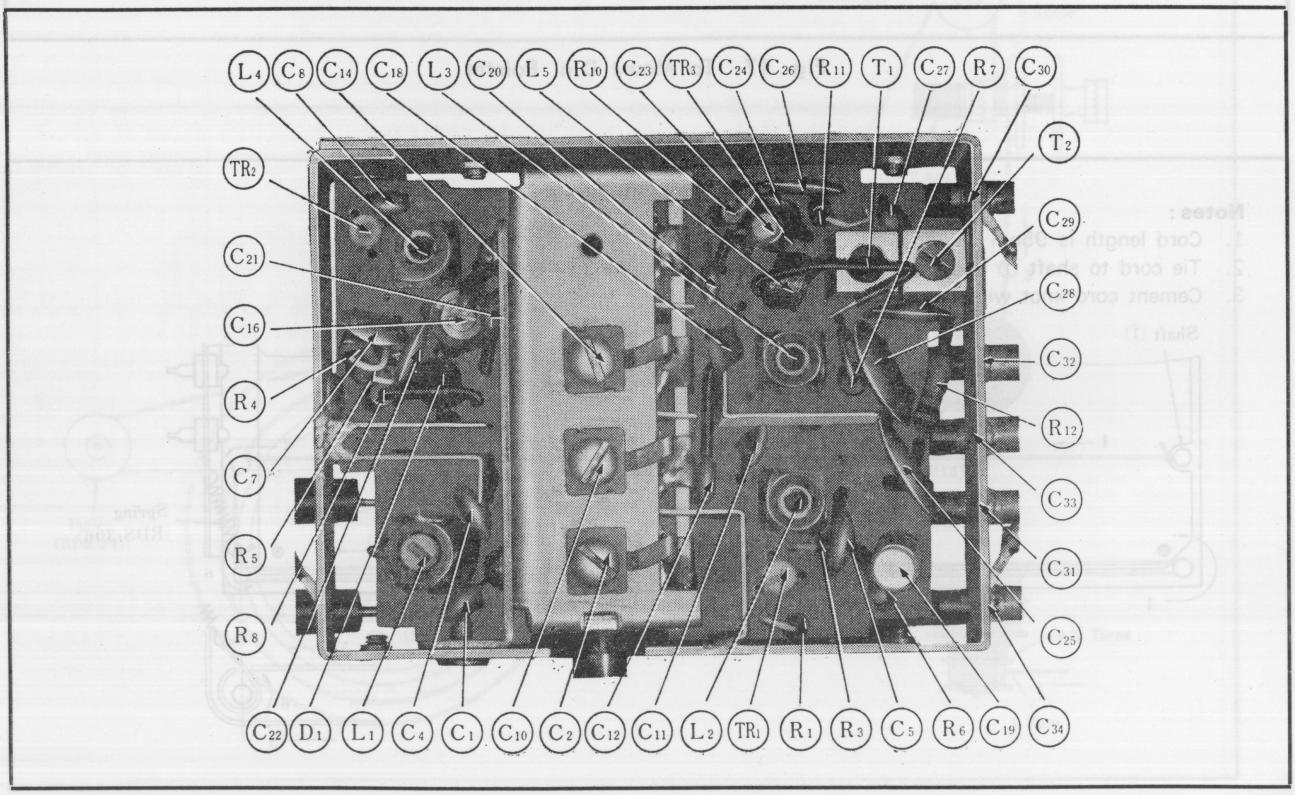

Fig. 20 Component View - Parts Identification, FM RF Section

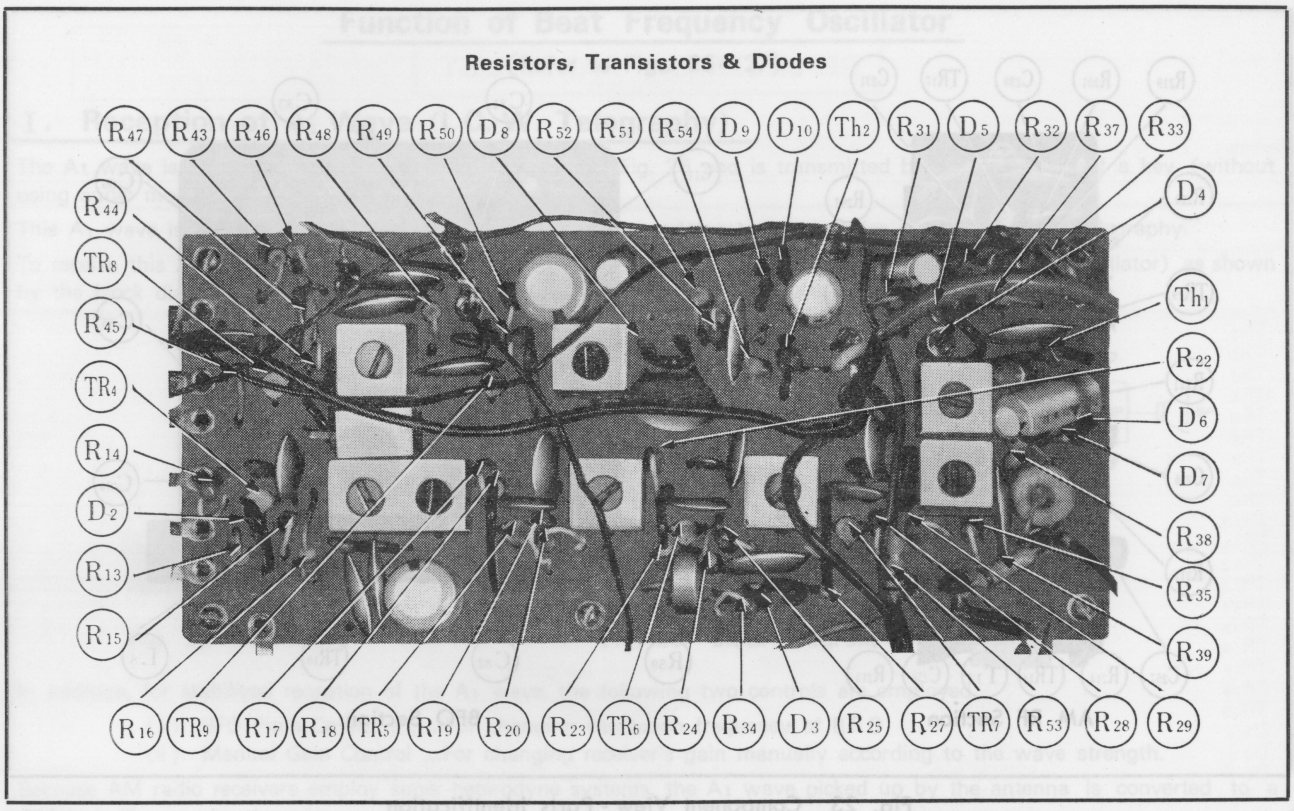

Fig. 21 Component View - Parts Identification, IF Section

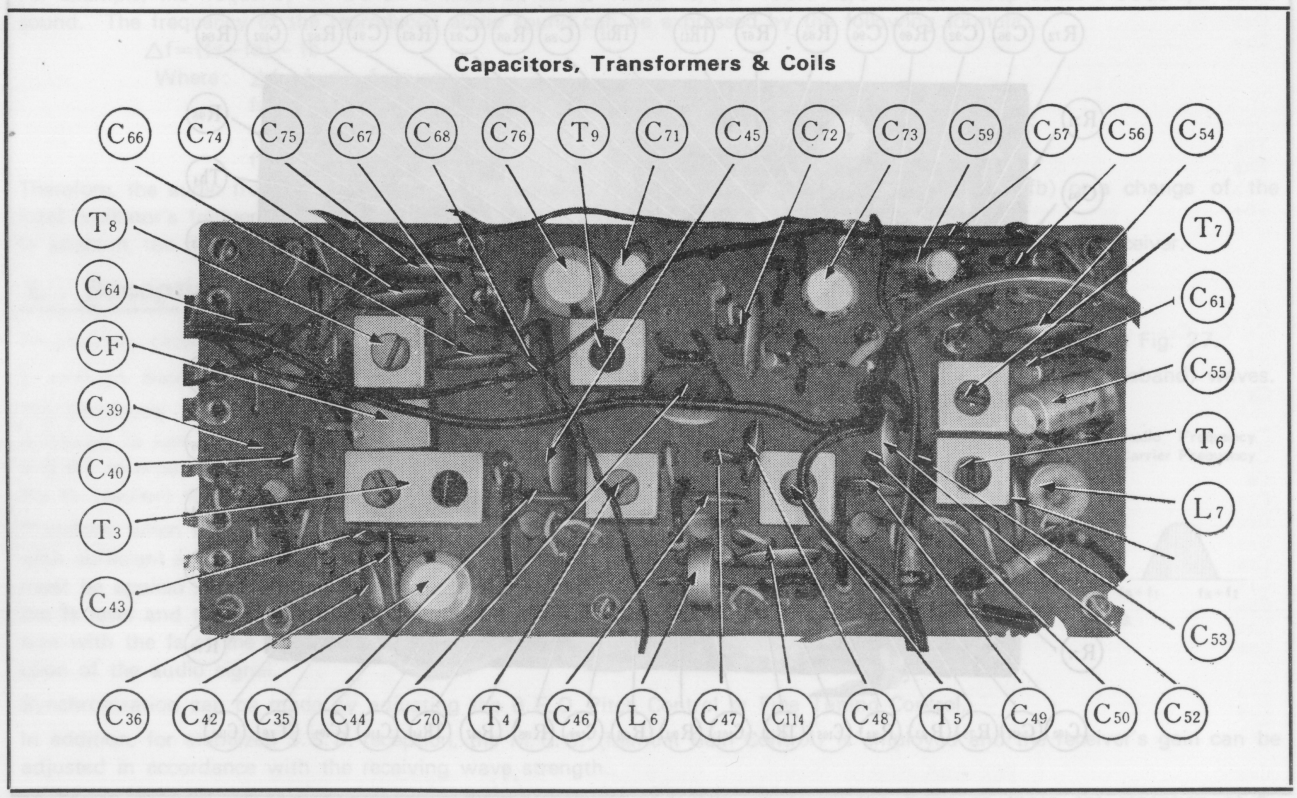

Fig. 22 Component View - Parts Identification, IF Section

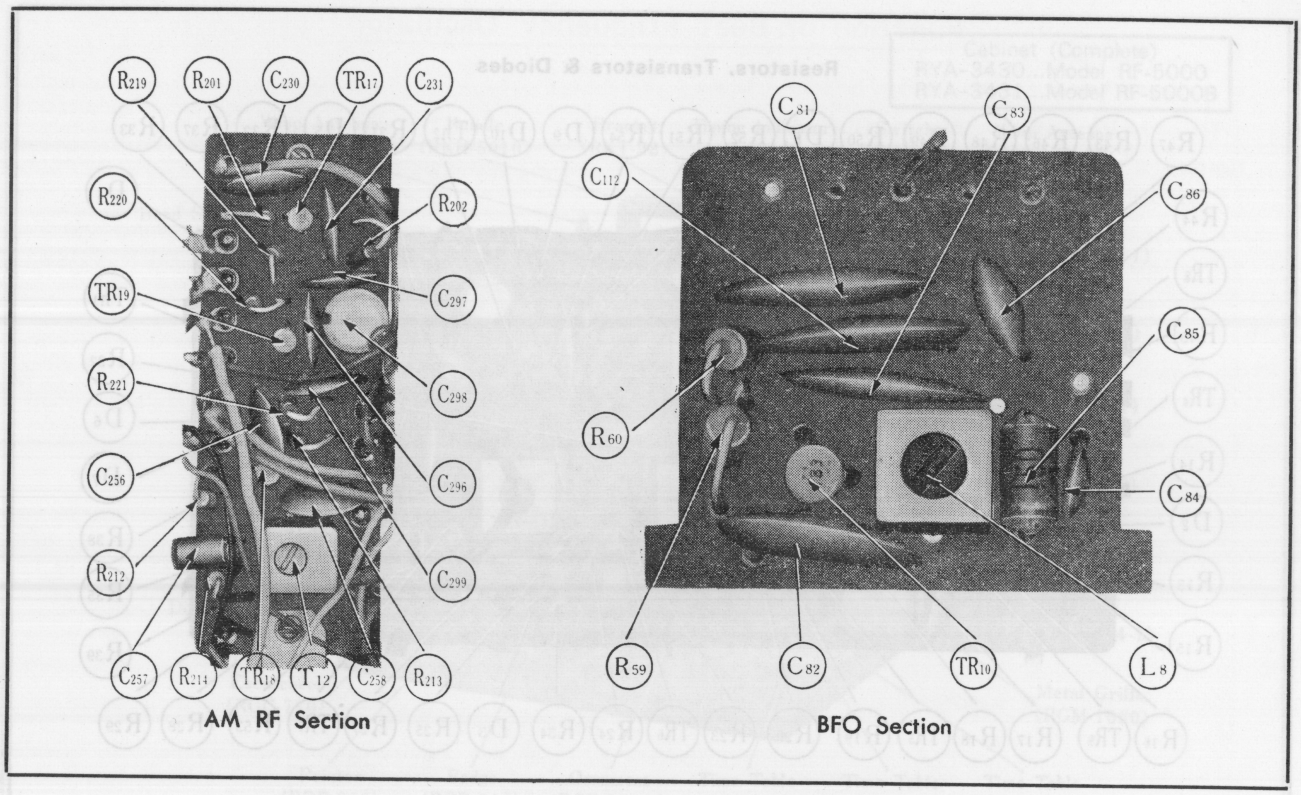

Fig. 23 Component View - Parts Identification

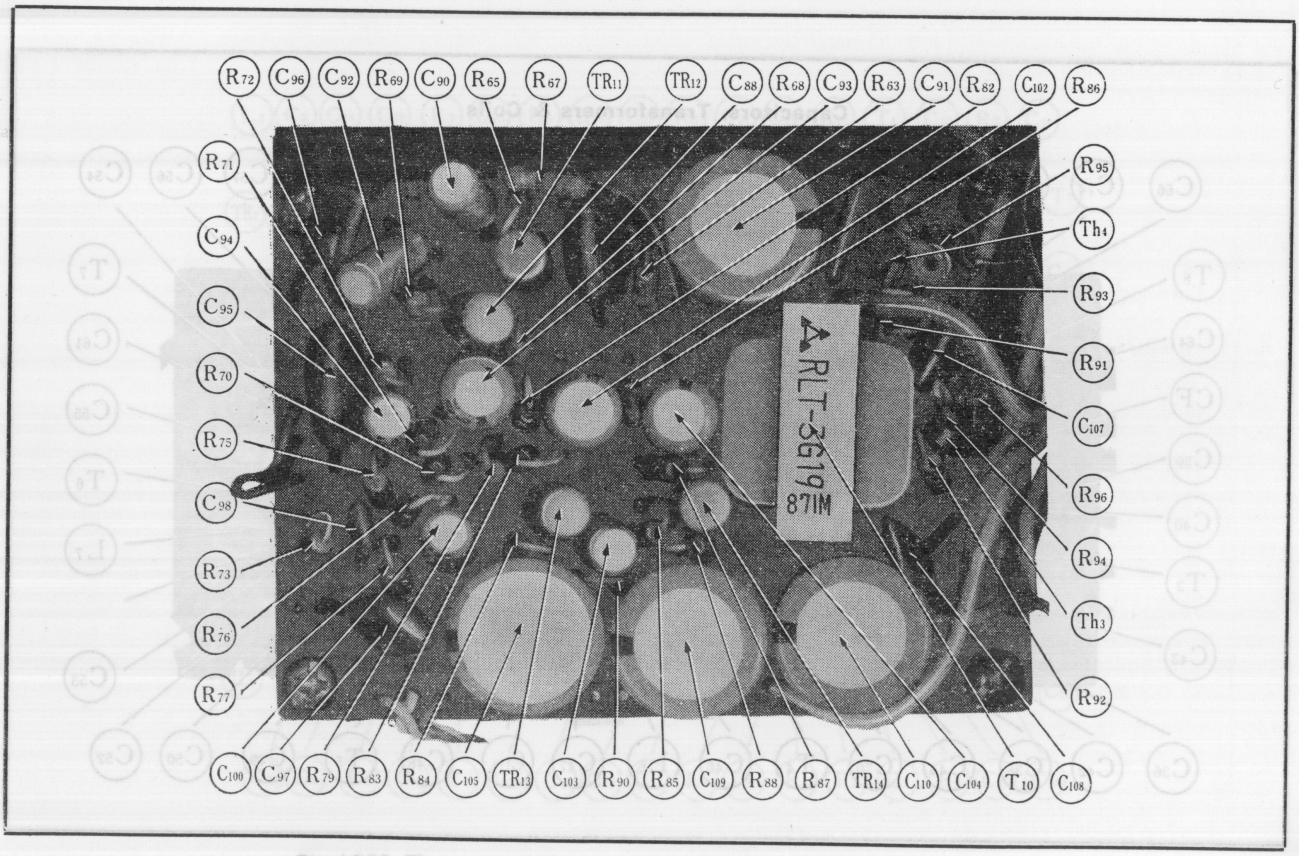

Fig. 24 Component View - Parts Identification, Audio Section

Function of Beat Frequency Oscillator

(Refer to Figs. 25～27)

I. Reception of A_1 Wave (I. C. W. Telegraphy)

The A_1 wave is the interrupted carrier wave as shown in Fig. 25 and is transmitted by the operation of a key (without using audio modulation wave).

This A_1 wave is also called the I. C. W. (Interrupted Continuous Wave) and used for ordinary wireless telegraphy.

To receive this A_1 wave with an ordinary AM radio receiver, it must have a B. F. O. (Beat Frequency Oscillator) as shown by the block diagram in Fig. 26.

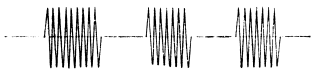

Fig. 25 A_1 Wave

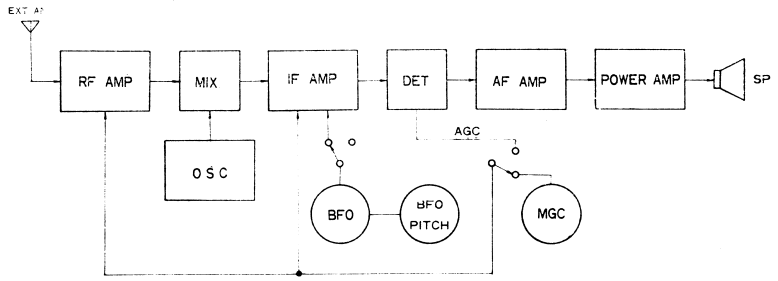

Fig. 26 Block Diagram of receiver & BFO

In addition, for stabilized reception of the A_1 wave, the following two controls are employed:

(i) BFO Pitch Control.....For changing oscillation frequency of BFO

(ii) Manual Gain Control ...For changing receiver's gain manually according to the wave strength.

Because AM radio receivers employ super-heterodyne systems, the A_1 wave picked up by the antenna is converted to a 455 kc/s IF wave by the mixer.

If this IF wave is modulated like an AM broadcasting wave, the audio sound is reproduced from the speaker after passing through the IF Amp. and detector stages.

For reproduction of interrupted audio sound, the output of the BFO must be applied to the IF amplifier stage and detected. For example, the frequency of the BFO must be set to 453.5 kc/s or 456.5 kc/s in order to reproduce a 1500 c/s audio sound. The frequency of the reproduced audio sound can be expressed by the following formula:

$$\triangle f = (fs - fo) - fb$$

Where: $\triangle f$ = Audio frequency

fs = Frequency of the A_1 wave

fo = Frequency of the local oscillator

fb = Frequency of the BFO

Therefore, the audio frequency ($\triangle f$) can be changed by either a change of the BFO's frequency (fb) or a change of the local oscillator's frequency (fo).

In addition, the frequency of the local oscillator (fo) can be changed with the fine tuning control of the receiver.

II. Reception of S. S. B. (Single Sideband) Waves

An ordinary broadcasting wave is a B. S. B. (Both Side Band) wave, with the frequency spectrum shown in Fig. 27.

In addition, because the RF-5000 has a B. F. O. (Beat Frequency Oscillator), it can receive S. S. B. (Single Sideband) waves.

The amplitude of the fs (carrier) in the S. S. B. is limited to low level (compared to that of the B. S .B.) in order to save transmitter power, and the fs (carrier) functions as a pilot signal.

Therefore, when receiving S. S. B. waves, a signal with sufficient amplitude, obtained by the B. F. O., must be applied to the S. S. B. wave to increase the fs level and the applied signal must synchronize with the fs of the S. S. B. wave for reproduction of the audio signal.

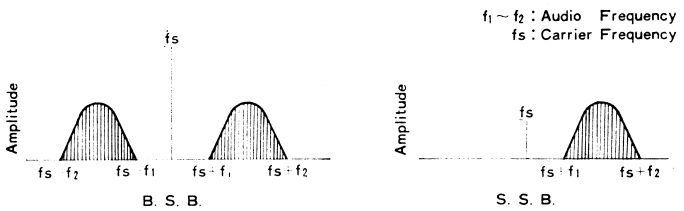

Fig. 27

Synchronization can be made by adjusting the B. F. O. Pitch Control or Fine Tuning Control.

In addition, for stabilized S. S. B. reception, the M. G. C. (Manual Gain Control) is employed and the receiver's gain can be adjusted in accordance with the receiving wave strength.

The block diagram and receiver's construction for reception of S. S. B. waves are the same as those for reception of A_1 waves.

REPLACEMENT PARTS LIST

Notes: 1. ※ indicates parts for the complete cabinet which are included when the cabinet is ordered.
2. Part numbers are indicated on most mechanical parts. Please use this number, therefore, when ordering parts.

Ref. No.	Part No.	Description
		TRANSISTORS AND DIODES
TR_1	2SC429	FM RF Amplifier
TR_2	2SC469	FM Oscillator
TR_3	2SC185	FM Mixer
TR_4	2SC469	FM 1st IF Amplifier
TR_5	2SC469	FM 2nd IF Amplifier
TR_6	2SC469	FM 3rd IF Amplifier
TR_7	2SC469	FM 4th IF Amplifier
TR_8	2SC183	AM 1st IF Amplifier
TR_9	2SC183	AM 2nd IF Amplifier
TR_{10}	2SC183	AM BFO
TR_{11}	2SB173	AF Pre Amplifier
TR_{12}	2SB345	1st AF Amplifier
TR_{13}	2SB345	2nd AF Amplifier
TR_{14}	2SB345	3rd AF Amplifier
TR_{15}	2SB324	Power Amplifier (push-pull)
TR_{16}	2SB324	
TR_{17}	2SC185	AM RF Amplifier
TR_{18}	2SC184	AM Mixer
TR_{19}	2SC185	AM Oscillator
D_1	SC-15	FM AFC
D_2	OA90	FM AGC
D_3	OA90	Detector for Tuning (FM) Indicator
D_4	OA79	FM Detector
D_5	OA79	
D_6	1S1211	FM Operation Compensator
D_7	1S1211	
D_8	OA90	AM Detector & AGC
D_9	1S1211	AM Operation Compensator
D_{10}	1S1211	
D_{11}	OA90	Automatic Noise Limitter
D_{12}	1S1211	AM D. AGC
D_{13}	1S1211	
		THERMISTORS
Th_1	MT-10K	Temperature Compensator, FM
Th_2	MT-10K	Temperature Compensator, FM
Th_3	MT-080	Temperature Compensator, AM
Th_4	MT-080	Temperature Compensator, AM
		CAPACITORS
C_1	ECM-S05070D-H	7PF, 50WV, ±0.5PF, Mica
C_3, C_9, C_{15} C_{17}	ECV-4EW03X50A	FM Tuning Gang, W/Trimmer (C_2, C_{10}, C_{14})
C_4	ECK-D05102P	0.001μF, 50WV, +100%, −0%, Ceramic
C_5	ECK-D05102P	0.001μF, 50WV, +100%, −0%, Ceramic
C_6	ECC-D05270K	27PF, 50WV, ±10%, Ceramic
C_7	ECK-D05102MY	0.001μF, 50WV, ±20%, Ceramic
C_8	ECM-S05150K-H	15PF, 50WV, ±10%, Mica
C_{11}	ECM-S05030C-H	3PF, 50WV, ±0.25PF, Mica
C_{12}	ECM-S05010C-H	1PF, 50WV, ±0.25PF, Mica
C_{16}	ECV-1ZW20P12	Trimmer, FM Oscillator
C_{18}	ECM-S05050C-H	5PF, 50WV, ±0.25PF, Mica
C_{19}	ECE-A25V1	1μF, 25WV, Electrolytic
C_{20}	ECM-S051R5C-H	1.5PF, 50WV, ±0.25PF, Mica
C_{21}	ECM-S05100K-H	10PF, 50WV, ±10%, Mica
C_{22}	ECK-D05103P	0.01μF, 50WV, +100%, −0%, Ceramic
C_{23}	ECC-U05331K	330PF, 50WV, ±10%, Ceramic
C_{24}	ECC-D05100K	10PF, 50WV, ±10%, Ceramic
C_{25}	ECK-D05223P	0.022μF, 50WV, +100%, −0%, Ceramic
C_{26}	ECK-D05103P	0.01μF, 50WV, +100%, −0%, Ceramic
C_{27}	ECC-D05010C	1PF, 50WV, ±0.25PF, Ceramic

Ref. No.	Part No.	Description
		CAPACITORS
C28	ECK-D05223P	0.022μF, 50WV, +100%, −0%, Ceramic
C29	ECK-D05103P	0.01μF, 50WV, +100%, −0%, Ceramic
C30	ECK-L5102P2-Y	0.001μF, 500WV, +100%, −0%, Ceramic
C31	ECC-L5470K2	47PF, 500WV, ±10%, Ceramic
C32	ECK-L5102P2-Y	0.001μF, 500WV, +100%, −0%, Ceramic
C33	ECK-L5102P2-Y	0.001μF, 500WV, +100%, −0%, Ceramic
C34	ECK-L5102P2-Y	0.001μF, 500WV, +100%, −0%, Ceramic
C35	ECE-A10V100	100μF, 10WV, Electrolytic
C36	ECK-D05333P	0.033μF, 50WV, +100%, −0%, Ceramic
C37	ECK-D05103P	0.01μF, 50WV, +100%, −0%, Ceramic
C38	ECK-D05103P	0.01μF, 50WV, +100%, −0%, Ceramic
C39	ECC-D05010C	1PF, 50WV, ±0.25PF, Ceramic
C40	ECK-D05103P	0.01μF, 50WV, +100%, −0%, Ceramic
C41	ECK-D05103P	0.01μF, 50WV, +100%, −0%, Ceramic
C42	ECK-D05333P	0.033μF, 50WV, +100%, −0%, Ceramic
C43	ECC-D05020C	2PF, 50WV, ±0.25PF, Ceramic
C44	ECK-D05103P	0.01μF, 50WV, +100%, −0%, Ceramic
C45	ECK-D05103P	0.01μF, 50WV, +100%, −0%, Ceramic
C46	ECK-D05103P	0.01μF, 50WV, +100%, −0%, Ceramic
C47	ECC-D05010C	1PF, 50WV, ±0.25PF, Ceramic
C48	ECK-D05103P	0.01μF, 50WV, +100%, −0%, Ceramic
C49	ECK-D05103P	0.01μF, 50WV, +100%, −0%, Ceramic
C50	ECC-D05020C	2PF, 50WV, ±0.25PF, Ceramic
C51	ECK-D05102P	0.001μF, 50WV, +100%, −0%, Ceramic
C52	ECK-D05103P	0.01μF, 50WV, +100%, −0%, Ceramic
C53	ECC-D05470K	47PF, 50WV, ±10%, Ceramic
C54	ECK-D05333P	0.033μF, 50WV, +100%, −0%, Ceramic
C55	ECE-A6V100	100μF, 6WV, Electrolytic
C56	ECQ-S1331JZ	330PF, 125WV, ± 5%, Styrol
C57	ECQ-S1331JZ	330PF, 125WV, ± 5%, Styrol
C58	ECK-D05333P	0.033μF, 50WV, +100%, −0%, Ceramic
C59	ECE-A15V5	5μF, 15WV, Electrolytic
C60	ECK-D05333P	0.033μF, 50WV, +100%, −0%, Ceramic
C61	ECQ-S1331JZ	330PF, 125WV, ± 5%, Styrol
C62	ECE-A25V1	1μF, 25WV, Electrolytic
C63	ECK-D05472MY	0.0047μF, 50WV, ±20%, Ceramic
C64	ECK-D05333P	0.033μF, 50WV, +100%, −0%, Ceramic
C65	ECC-D05010C	1PF, 50WV, ±0.25PF, Ceramic
C66	ECK-D05333P	0.033μF, 50WV, +100%, −0%, Ceramic
C67	ECC-D05010C	1PF, 50WV, 0.25PF, Ceramic
C68	ECK-D05333P	0.033μF, 50WV, +100%, −0%, Ceramic
C69	ECC-U05181K	180PF, 50WV, ±10%, Ceramic
C70	ECK-D05103MY	0.01μF, 50WV, ±20%, Ceramic
C71	ECE-A15V5	5μF, 15WV, Electrolytic
C72	ECK-D05103MY	0.01μF, 50WV, ±20%, Ceramic
C73	ECE-A6V100	100μF, 6 WV, Electrolytic
C74	ECK-D05333P	0.033μF, 50WV, +100%, −0%, Ceramic
C75	ECK-D05333P	0.033μF, 50WV, +100%, −0%, Ceramic
C76	ECE-A10V100	100μF, 10WV, Electrolytic
C78	ECE-A25V1	1μF, 25WV, Electrolytic
C79	ECE-A15V5	5μF, 15WV, Electrolytic

Ref. No.	Part No.	Description
		CAPACITORS
C80	ECE-B6V500	500μF, 6 WV, Electrolytic
C81	ECK-D05333P	0.033μF, 50WV, +100%, − 0%, Ceramic
C82	ECK-D05103MY	0.01μF, 50WV, ±20%, Ceramic
C83	ECK-D05103MY	0.01μF, 50WV, ±20%, Ceramic
C84	ECC-D05100K	10PF, 50WV, ±10%,Ceramic
C85	ECQ-S1151JZ	150PF, 125WV, ±5%, Styrol
C86	ECK-D05102P	0.001μF, 50WV, +100%, − 0%, Ceramic
C87	ECV-1YW05D12A	BFO Pitch Tuning Gang
C88	ECQ-M05104MZ	0.1μF, 50WV, ±20%, Polyester
C89	ECK-D05333P	0.033μF, 50WV, +100%, − 0%, Ceramic
C90	ECE-A25V1	1μF, 25WV, Electrolytic
C91	ECE-A10V500	500μF, 10WV, Electrolytic
C92	ECE-A25V1	1μF, 25WV, Electrolytic
C93	ECE-A6V100	100μF, 6 WV, Electrolytic
C94	ECE-A25V1	1μF, 25WV, Electrolytic
C95	ECQ-M05104MZ	0.1μF, 50WV, ±20%, Polyester
C96	ECQ-M05103MZ	0.01μF, 50WV, ±20%, Polyester
C97	ECQ-M05333MZ	0.033μF, 50WV, ±20%, Polyester
C98	ECQ-M05332MZ	0.0033μF, 50WV, ±20%, Polyester
C99	ECE-B10V30	30μF, 10WV, Electrolytic
C100	ECE-A25V1	1μF, 25WV, Electrolytic
C101	ECK-D05333P	0.033μF, 50WV, +100%, − 0%, Ceramic
C102	ECE-A6V100	100μF, 6 WV, Electrolytic
C103	ECE-A6V10	10μF, 6 WV, Electrolytic
C104	ECE-A6V100	100μF, 6 WV, Electrolytic
C105	ECE-A10V500	500μF, 10WV, Electrolytic
C106	ECQ-M05473MZ	0.047μF, 50WV, ±20%, Polyester
C107	ECQ-M05153MZ	0.015μF, 50WV, ±20%, Polyester
C108	ECQ-M05153MZ	0.015μF, 50WV, ±20%, Polyester
C109	ECE-A6V500	500μF, 6 WV, Electrolytic
C110	ECE-A6V500	500μF, 6 WV, Electrolytic
C111	ECK-D05333P	0.033μF, 50WV, +100%, − 0%, Ceramic
C112	ECK-D05333P	0.033μF, 50WV, +100%, − 0%, Ceramic
C113	ECE-A15V5	5mfd, 15WV, Electrolytic
C114	ECK-D05223P	0.033mfd, 50WV, +100%, − 0%, Ceramic
C115	ECK-D05223P	0.022μF, 50WV, +100%, − 0%, Ceramic
C201	ECC-U05070D	7PF, 50WV, ±0.5PF, Ceramic
C202	ECC-D05030C	3PF, 50WV, ±0.25PF, Ceramic
C203	ECC-D05030C	3PF, 50WV, ±0.25PF, Ceramic
C204	ECC-D05120K	12PF, 50WV, ±10%, Ceramic
C205, C214, C215, C216	ECV-4RW12W11	Trimmer, MW, LW & SW_1 Antenna
C206	ECC-D05220K	22PF, 50WV, ±10%, Ceramic
C207	ECC-D05100K	10PF, 50WV, ±10%, Ceramic
C208	ECC-D05150K	15PF, 50WV, ±10%, Ceramic
C209	ECC-D05270K	27PF, 50WV, ±10%, Ceramic
C210	ECC-D05220K	33PF, 50WV, ±10%, Ceramic
C211	ECC-D05390K	39PF, 50WV, ±10%, Ceramic
C212	ECC-D05220K	22PF, 50WV, ±10%, Ceramic
C213	ECM-S05390K-H	39PF, 50WV, ±10%, Mica
C224, C225, C254, C255 C271, C273	ECV-6FD43A26	AM Tuning Gang
C226	ECC-D05100K	10PF, 50WV, ±10%, Ceramic
C227	ECM-S05100K-H	10PF, 50WV, ±10%, Mica
C228	ECM-S05100K-H	10PF, 50WV, ±10%, Mica
C230	ECK-D05333P	10PF, 50WV, ±10%, − 0%, Mica
C231	ECK-D05333P	0.033μF, 50WV, +100%, − 0%, Ceramic
C232	ECK-D05333P	0.033μF, 50WV, +100%, − 0%, Ceramic
C233	ECC-D05180K	18PF, 50WV, ±10%, Ceramic
C234	ECC-D05050C	5PF, 50WV, ±0.25PF, Ceramic
C235	ECC-D05150K	15PF, 50WV, ±10%, Ceramic
C236	ECC-D05270K	27PF, 50WV, ±10%, Ceramic
C237	ECC-D05330K	33PF, 50WV, ±10%, Ceramic
C238	ECM-S05560K-H	56PF, 50WV, ±10%, Mica
C239	ECM-S05680K-H	68PF, 50WV, ±10%, Mica
C240	ECM-S05820K-H	82PF, 50WV, ±10%, Mica
C249	ECM-S05100K-H	10PF, 50WV, ±10%, Mica
C250	ECM-S05100K-H	10PF, 50WV, ±10%, Mica
C251	ECM-S05150K-H	15PF, 50WV, ±10%, Mica

Ref. No.	Part No.	Description
		CAPACITORS
C252	ECM-S05050C-H	5PF, 50WV, ±0.25PF, Mica
C253, C270, C272	ECV-3EW01X12A	Fine Tuning Gang
C256	ECK-D05333P	0.033μF, 50WV, +100%, −0%, Ceramic
C257	ECQ-S02152KZ-F	1500PF, 25WV, ±10%, Styrol
C258	ECK-D05333P	0.033μF, 50WV, +100%, −0%, Ceramic
C259	ECM-S05470K-H	47PF, 50WV, ±10%, Mica
C260	ECQ-S02152K-F	1500PF, 25WV, ±10%, Styrol
C261	ECK-D05103MY	0.01μF, 50WV, ±20%, Ceramic
C262	ECK-D05472MY	0.0047μF, 50WV, ±20%, Ceramic
C263	ECQ-S1181JZ-F	180PF, 125WV, ±5 %, Styrol
C264	ECQ-S1471JZ-F	470PF, 125WV, ±5 %, Styrol
C265	ECQ-S02152KZ-F	1500PF, 25WV, ±10%, Styrol
C266	ECQ-S02102KZ-F	1000PF, 25WV, ±10%, Styrol
C267	ECQ-S02172KZ-F	1700PF, 25WV, ±10%, Styrol
C268	ECQ-S02272KZ-F	2700PF, 25WV, ±10%, Styrol
C269	ECQ-S02332KZ-F	3300PF, 25WV, ±10%, Styrol
C284	ECC-D05070D	7PF, 50WV, ±0.5PF, Ceramic
C285	ECC-D05150K	15PF, 50WV, ±10%, Ceramic
C286	ECC-D05050C	5PF, 50WV, ±0.25PF, Ceramic
C287	ECC-D05150K	15PF, 50WV, ±10%, Ceramic
C288	ECC-D05270K	27PF, 50WV, ±10%, Ceramic
C289	ECC-D05180K	18PF, 50WV, ±10%, Ceramic
C290	ECM-S05470K-H	47PF, 50WV, ±10%, Mica
C291	ECM-S05470K-H	47PF, 50WV, ±10%, Mica
C292	ECM-S05680K-H	68PF, 50WV, ±10%, Mica
C293	ECM-S05050C-H	5PF, 50WV, ±0.25PF, Mica
C294	ECM-S05050C-H	5PF, 50WV, ±0.25PF, Mica
C295	ECM-S05100K-H	10PF, 50WV, ±10%, Mica
C296	ECK-D05333P	0.033μF, 50WV, +100%, −0%, Ceramic
C297	ECK-D05333P	0.033μF, 50WV, +100%, −0%, Ceramic
C298	ECE-A10V100	100μF, 10WV, Electrolytic
C299	ECK-D05103MY	0.01μF, 50WV, ±20% Ceramic
		RESISTORS
R1	ERD-14VK 822	8.2KΩ, ¼Watt, ±10%, Carbon
R2	ERD-14TK 182-E	1.8KΩ, ¼Watt, ±10%, Carbon
R3	ERD-14VK 270	27Ω, ¼Watt, ±10%, Carbon
R4	ERD-14VK 822	8.2KΩ, ¼Watt, ±10%, Carbon
R5	ERD-14VK 103	10KΩ, ¼Watt, ±10%, Carbon
R6	ERD-14VK 221	220Ω, ¼Watt, ±10%, Carbon
R7	ERD-14VK 472	4.7KΩ, ¼Watt, ±10%, Carbon
R8	ERD-14TK 104-E	100KΩ, ¼Watt, ±10%, Carbon
R9	ERD-14TK 104-E	100KΩ, ¼Watt, ±10%, Carbon
R10	ERD-14VK 561	560Ω, ¼Watt, ±10%, Carbon
R11	ERD-14VK 101	100Ω, ¼Watt, ±10%, Carbon
R12	ERD-14TK 102-E	1KΩ, ¼Watt, ±10%, Carbon
R13	ERD-14VK 102	1KΩ, ¼Watt, ±10%, Carbon
R14	ERD-14VK 101	100Ω, ¼Watt, ±10%, Carbon
R15	ERD-14VK 331	330Ω, ¼Watt, ±10%, Carbon
R16	ERD-14VK 561	560Ω, ¼Watt, ±10%, Carbon
R17	ERD-14VK 101	100Ω, ¼Watt, ±10%, Carbon
R18	ERD-14TK 122-E	1.2KΩ, ¼Watt, ±10%, Carbon
R19	ERD-14VK 681	680Ω, ¼Watt, ±10%, Carbon
R20	ERD-14VK 331	330Ω, ¼Watt, ±10%, Carbon
R21	ERD-14TK 563-E	56KΩ, ¼Watt, ±10%, Carbon
R22	ERD-14VK 101	100Ω, ¼Watt, ±10%, Carbon
R23	ERD-14TK 122-E	1.2KΩ, ¼Watt, ±10%, Carbon
R24	ERD-14VK 561	560Ω, ¼Watt, ±10%, Carbon
R25	ERD-14VK 331	330Ω, ¼Watt, ±10%, Carbon
R26	ERD-14VK 101	100Ω, ¼Watt, ±10%, Carbon
R27	ERD-14TK 122-E	1.2KΩ, ¼Watt, ±10%, Carbon
R28	ERD-14VK 471	470Ω, ¼Watt, ±10%, Carbon
R29	ERD-14VK 331	330Ω, ¼Watt, ±10%, Carbon
R30	ERD-14TK 272-E	2.7KΩ, ¼Watt, ±10%, Carbon
R31	ERD-14VK 102	1KΩ, ¼Watt, ±10%, Carbon
R32	ERD-14VK 102	1KΩ, ¼Watt, ±10%, Carbon
R33	EVL-TOAAOOB53	5KΩ(B), AM Tuning Indicator Control
R34	ERD-14VK 822	8.2KΩ, ¼Watt, ±10%, Carbon
R35	ERD-14VK 104	100KΩ, ¼Watt, ±10%, Carbon
R36	ERD-14TK 472-E	4.7KΩ, ¼Watt, ±10%, Carbon
R37	ERD-14VK 472	4.7KΩ, ¼Watt, ±10%, Carbon
R38	ERD-14VK 472	4.7KΩ, ¼Watt, ±10%, Carbon
R39	ERD-14TK 183-E	18KΩ, ¼Watt, ±10%, Carbon

Ref. No.	Part No.	Description
		RESISTORS
R40	ERD-14TK 562-E	5.6KΩ, ¼Watt, ±10%, Carbon
R41	ERD-14TK 472-E	4.7KΩ, ¼Watt, ±10%, Carbon
R42	EVJ-AOAT12A55	500KΩ(A), MGC Control
R43	ERD-14TK 152	1.5KΩ, ¼Watt, ±10%, Carbon
R44	ERD-14VK 154	150KΩ, ¼Watt, ±10%, Carbon
R45	ERD-14VK 334	330KΩ, ¼Watt, ±10%, Carbon
R46	ERD-14VK 561	560Ω, ¼Watt, ±10%, Carbon
R47	EVL-TOAAOOB13	1KΩ (B), FM Tuning Indicator Control
R48	ERD-14VK 102	1KΩ, ¼Watt, ±10%, Carbon
R49	ERD-14VK 563	56KΩ, ¼Watt, ±10%, Carbon
R50	ERD-14VK 471	470Ω, ¼Watt, ±10%, Carbon
R51	ERD-14VK 332	3.3KΩ, ¼Watt, ±10%, Carbon
R52	ERD-14VK 471	470Ω, ¼Watt, ±10%, Carbon
R53	ERD-14TK 103-E	10KΩ, ¼Watt, ±10%, Carbon
R54	ERD-14VK 472	4.7KΩ, ¼Watt, ±10%, Carbon
R55	ERD-14TK 562-E	5.6KΩ, ¼Watt, ±10%, Carbon
R56	ERD-14TK 103-E	10KΩ, ¼Watt, ±10%, Carbon
R57	ERD-14TK 223-E	22KΩ, ¼Watt, ±10%, Carbon
R58	ERD-14TK 223-E	22KΩ, ¼Watt, ±10%, Carbon
R59	ERD-14VK 101	100Ω, ¼Watt, ±10%, Carbon
R60	ERD-14VK 152	1.5KΩ, ¼Watt, ±10%, Carbon
R61	ERD-14TK 474-E	470KΩ, ¼Watt, ±10%, Carbon
R62	ERD-14TK 823-E	82KΩ, ¼Watt, ±10%, Carbon
R63	ERD-14VK 334	330KΩ, ¼Watt, ±10%, Carbon
R64	ERD-14TK 184-E	180KΩ, ¼Watt, ±10%, Carbon
R65	ERD-14VK 822	8.2KΩ, ¼Watt, ±10%, Carbon
R66	EVC-BOAL25D53	5KΩ(D), Volume Control
R67	ERD-14TK 332-E	3.3KΩ, ¼Watt, ±10%, Carbon
R68	ERD-14VK 332	3.3KΩ, ¼Watt, ±10%, Carbon
R69	ERD-14VK 183	18KΩ, ¼Watt, ±10%, Carbon
R70	ERD-14VK 101	100Ω, ¼Watt, ±10%, Carbon
R71	ERD-14VK 182	1.8KΩ, ¼Watt, ±10%, Carbon
R72	ERD-14VK 562	5.6KΩ, ¼Watt, ±10%, Carbon
R73	ERD-14VK 152	1.5KΩ, ¼Watt, ±10%, Carbon
R74	EVC-BOAN27A54	50KΩ(A), Bass Control
R75	ERD-14VK 153	15KΩ, ¼Watt, ±10%, Carbon
R76	ERD-14VK 101	100Ω, ¼Watt, ±10%, Carbon
R77	ERD-14VK 332	3.3KΩ, ¼Watt, ±10%, Carbon
R78	EVC-BOAN27A54	50KΩ(A), Treble Control
R79	ERD-14VK 332	3.3KΩ, ¼Watt, ±10%, Carbon
R80	ERD-14TK 222-E	2.2KΩ, ¼Watt, ±10%, Carbon
R81	ERD-14TK 103-E	10KΩ, ¼Watt, ±10%, Carbon
R82	ERD-14VK 470	47Ω, ¼Watt, ±10%, Carbon
R83	ERD-14VK 182	1.8KΩ, ¼Watt, ±10%, Carbon
R84	ERD-14VK 392	3.9KΩ, ¼Watt, ±10%, Carbon
R85	ERD-14VK 332	3.3KΩ, ¼Watt, ±10%, Carbon
R86	ERD-14VK 561	560Ω, ¼Watt, ±10%, Carbon
R87	ERD-14VK 220	22Ω, ¼Watt, ±10%, Carbon
R88	ERD-14VK 103	10KΩ, ¼Watt, ±10%, Carbon
R89	ERD-14TK 273-E	27KΩ, ¼Watt, ±10%, Carbon
R90	ERD-14VK 470	47Ω, ¼Watt, ±10%, Carbon
R91	ERD-14VK 152	1.5KΩ, ¼Watt, ±10%, Carbon
R92	ERD-14VK 152	1.5KΩ, ¼Watt, ±10%, Carbon
R93	ERD-14VK 121	120Ω, ¼Watt, ±10%, Carbon
R94	ERD-14VK 121	120Ω, ¼Watt, ±10%, Carbon
R95	ERW-12RR47	0.47Ω, ½Watt, ±10%, Wire
R96	ERW-12RR47	0.47Ω, ½Watt, ±10%, Wire
R98	ERD-14TK 153	15KΩ, ¼Watt, ±10%, Carbon
R201	ERD-14VK 332	3.3KΩ, ¼Watt, ±10%, Carbon
R202	ERD-14VK 122	1.2KΩ, ¼Watt, ±10%, Carbon
R203	ERD-14TK 102-E	1KΩ, ¼Watt, ±10%, Carbon
R204	ERD-14TK 122-E	1.2KΩ, ¼Watt, ±10%, Carbon
R205	ERD-14TK 331-E	330Ω, ¼Watt, ±10%, Carbon
R206	ERD-14TK 471-E	470Ω, ¼Watt, ±10%, Carbon
R207	ERD-14TK 151-E	150Ω, ¼Watt, ±10%, Carbon
R208	ERD-14TK 101-E	100Ω, ¼Watt, ±10%, Carbon
R209	ERD-14TK 151-E	150Ω, ¼Watt, ±10%, Carbon
R210	ERD-14TK 221-E	220Ω, ¼Watt, ±10%, Carbon
R211	ERD-14TK 103-E	10KΩ, ¼Watt, ±10%, Carbon
R212	ERD-14VK 682	6.8KΩ, ¼Watt, ±10%, Carbon
R213	ERD-14VK 102	1KΩ, ¼Watt, ±10%, Carbon
R214	ERD-14VK 272	2.7KΩ, ¼Watt, ±10%, Carbon
R215	ERD-14TK 102-E	1KΩ, ¼Watt, ±10%, Carbon
R216	ERD-14TK 561-E	560Ω, ¼Watt, ±10%, Carbon
R217	ERD-14TK 271-E	270Ω, ¼Watt, ±10%, Carbon
R218	ERD-14TK 101-E	100Ω, ¼Watt, ±10%, Carbon
R219	ERD-14VK 153	15KΩ, ¼Watt, ±10%, Carbon
R220	ERD-14VK 102	1KΩ, ¼Watt, ±10%, Carbon

Ref. No.	Part No.	Description
		RESISTORS
R_{221}	ERD-14VK 122	1.2KΩ, ¼Watt, ±10%, Carbon
R_{222}	ERD-14TK 331-E	330Ω, ¼Watt, ±10%, Carbon
		COILS AND TRANSFORMERS
L_1	RLA-4P5	FM Antenna Coil
L_2	RLD-4N12	FM Detector Coil, Primary
L_3	RLD-4N12	FM Detector Coil, Secondary
L_4	RLO-4N9	FM Oscillator Coil
L_5	RLQ-Y72S-1	FM Choke Coil
L_6	RLQ-X121-1	Choke Coil
L_7	RLQ-X121-1	Choke Coil
L_8	RLO-9B1	BFO Oscillator Coil
L_{10}	RLQ-Q46S-1	SW_8 Choke Coil
L_{11}	RLQ-Q14G-1	SW_5 Choke Coil
L_{13}	RLF-6H1	LW Antenna Coil
L_{14}	RLF-6H1	MW Antenna Coil
L_{15}	RLF-3G2	SW_1 Antenna Coil
L_{16}	RLA-3Q46	SW_2 Antenna Coil
L_{17}	RLA-3Q47	SW_3 Antenna Coil
L_{18}	RLA-3Q48	SW_4 Antenna Coil
L_{19}	RLA-3Q49	SW_5 Antenna Coil
L_{20}	RLA-3Q50	SW_6 Antenna Coil
L_{21}	RLA-3Q51	SW_7 Antenna Coil
L_{22}	RLA-3Q52	SW_8 Antenna Coil
L_{23}	RLD-3Q3	SW_1 Detector Coil
L_{24}	RLD-3Q4	SW_2 Detector Coil
L_{25}	RLD-3Q5	SW_3 Detector Coil
L_{26}	RLD-3Q6	SW_4 Detector Coil
L_{27}	RLD-3Q7	SW_5 Detector Coil
L_{28}	RLD-3Q8	SW_6 Detector Coil
L_{29}	RLD-3Q9	SW_7 Detector Coil
L_{30}	RLD-3Q10	SW_8 Detector Coil
L_{31}	RLO-1Q6	LW Oscillator Coil
L_{32}	RLO-2Q37	MW Oscillator Coil
L_{33}	RLO-3Q84	SW_1 Oscillator Coil
L_{34}	RLO-3Q85	SW_2 Oscillator Coil
L_{35}	RLO-3Q86	SW_3 Oscillator Coil
L_{36}	RLO-3Q85	SW_4 Oscillator Coil
L_{37}	RLO-3Q88	SW_5 Oscillator Coil
L_{38}	RLO-3Q89	SW_6 Oscillator Coil
L_{39}	RLO-3Q90	SW_7 Oscillator Coil
L_{40}	RLO-3Q91	SW_8 Oscillator Coil
T_1	RLI-4B113-T	FM 1st IF Transformer, Primary
T_2	RLI-4B351-T	FM 1st IF Transformer, Secondary
T_3	RLI-4D201	FM 2nd IF Transformer
T_4	RLI-4C204	FM 3rd IF Transformer
T_5	RLI-4C204	FM 4th IF Transformer
T_6	RLI-4C504	FM 5th IF Transformer, Primary
T_7	RLI-4C505	FM 5th IF Transformer, Secondary
T_8	RLI-211-T	AM 2nd IF Transformer
T_9	RLI-2C450-T	AM 3rd IF Transformer
T_{10}	RLT-3G19	Input Transformer, P=3KΩ : S=400Ω
T_{11}	RLI-7C3-T	AM 1st IF Transformer
		SPEAKER AND EARPHONE
SP_1	EAS-18D28S	18cm×12cm (7″×5″) PM Dynamic Speaker, 16Ω
SP_2	EAS-12P16SC	12cm (5″) PM Dynamic Speaker, 16Ω
EP	EAE-1MB	Magnetic Earphone,
		SWITCHES
S_1~S_6	RSH-901-1	Band Selector & Power Source Switch
S_7 & S_8	RSH-411	Bandwidth, AFC, ANL & BFO Switch
S_9	RSH-25-1	Dial Light Switch
		APPEARANCE
	RYA-3430	Cabinet (Complete)...Model RF-5000
	RYA-3431	Cabinet (Complete)...Model RF-5000B
	※RYM-760	Cabinet Front (Complete)
	※RYF-570	Cover (Complete), Battery Compartment...Model RF-5000
	RYF-571	Cover (Complete), Battery Compartment...Model RF-5000B

Ref. No.	Part No.	Description
		APPEARANCE
	※RYF-580	Cover (Complete), Cabinet Front
	※RKU-9013-2	Cover Only, Cabinet Back
	※RKH-5010	Handle, Cabinet
	※RKT22	Bracket, Handle M'tg.
	※⊕B3-8V	Screw, Handle Bracket M'tg. (2 Req'd)
	RKD-4290	Scale, Dial, MW, SW_2, SW_4, SW_6 & SW_8
	RKD-4360	Scale, Dial, LW, SW_1, SW_3, SW_5, SW_7 & FM
	⊕B2-10N	Screw, Dial Scale M'tg. (4 Req'd)
	※RGP-851	Panel, Dial
	RGL-36-2	Panel Light, LW, SW_1, SW_3, SW_5 & SW_7
	RGL-36-3	Panel Light, FM
	RGL-37-1	Panel Light, MW, SW_2, SW_4, SW_6 SW_8
	RDP-258	Pointer, Dial, FM
	RDP-259	Pointer, Dial AM
	RANT145-7TC	Whip Antenna (2 Req'd)
	RSA-22	Frame Antenna
	R-301F	Tuning Indicator
	RBV-128	Knob, MGC
	FC1.7-4	Screw, MGC Knob M'tg.
	RBT-96-1	Knob, Tuning
	RBN-180-2	Knob,
	RBN-210	Knob, Volume & Fine Tuning
	RBN-211	Knob, Treble
	RBN-212	Knob, Bass
		MISCELLANEOUS
	RVL-207-1	Dial Light, 6V 0.04A (13 Req'd)
	RVL-407	Neon Lamp, Arrester
	RJP-3-1	Plug, Phono, Record & EXT Speaker
	RJP-6	Plug, EXT FM Antenna (2 Req'd)
	RJP-11	Plug, EXT AM Antenna
	RJP-18	Plug, Connector, 8 Pin
	RJP-67	Plug, Battery, 5 Pin
	RJP-11-2	Plug, EXT AM Ground
	RJJ-25-1	Jack, Multiplex Output, Stereo Input, Record & Earphone
	RJJ-70	Jack, Phono
	RJS-25-1	Socket, Battery.....Model RF-5000 Only
	RJV-4801	Socket, Connector
	RJF-3107	Jack, FM Antenna
	⊕B3-10N	Screw, FM Antenna Jack M'tg. (2 Req'd)
	RJF-3408	Terminal, EXT FM & AM Antenna & Ground
	⊕B3-8N	Screw, Jack Terminal M'tg (2 Req'd)
	RJK-5305	Tube, Battery (2 Req'd)
	RJB-1003-4	Case, Battery
	RJC-102	Terminal, Battery (2 Req'd)
	RJC-601	Spring, Battery (2 Req'd)
	RUV-307	Cover, Cabinet Inside
	※RUS-60-1	Spring, Cabinet Front Cover Bracket (2 Req'd)
	※RMA-190	Bracket, Core Antenna M'tg. (2 Req'd)
	※RMA-194	Bracket, (Large), Frame Antenna M'tg. (2 Req'd)
	RMA-195	Bracket, (Small), Frame Antenna M'tg. (2 Req'd)
	RMY-22	Heat Sink, Transistor
	RMZ-30	Cover, Panel Light (6 Req'd)
	RDT-9043	Shaft, Tuning
	RDD-2070	Drum, Dial (2 Req'd)
	L3-5.5	Screw, Dial Drum M'tg. (4 Req'd)
	RDH-272	Dial Back Plate
	RDS-417-1	Spring (Long), Dial (2 Req'd)
	RDS-404	Spring (Short), Dial (2 Req'd)
	RDZ-02	Cord, Pointer Guide, 95cm (37 13/32")
	RDZ-05-3	Cord, Dial, 465cm, (181½")
	RDY-8	Shaft, Pointer Guide
	RDE-69	Shaft, Pointer Guide (3 Req'd)
	※RGE-39	Time Table, Outside
	※RGE-40-1	Time Table, Center
	RXE-140	Band Selector Pin (Complete)
	※RGE-46	Time Table, Inside
	※⊕B3-6K	Screw, Time Table M'tg
	※RBH-4001	Hinge, Battery Compartment Cover (2 Req'd)
	※NN-3	Nut, Hinge M'tg. (2 Req'd)
	※RNE-429	Nut, Hinge & Dial Light Switch M'tg (4 Req'd)
	※⊕P3-5K	Screw, Hinge M'tg. (4 Req'd)
	RHG-5-1	Rubber Cushion, Tuning Gang (5 Req'd)
	RHG-202	Rubber Cushion, Dial Light M'tg. (2 Req'd)
	RHG-109	Rubber Cushion, Core Antenna M'tg. (4 Req'd)
	DM3-8R	Red Screw, Battery Case & Cabinet Back Cover M'tg. (4 Req'd)
	DM4-8R	Red Screw, Chassis M'tg. (9 Req'd)

AC ADAPTOR

For the parts list and the technical data of the AC adaptor designed for the RF-5000 or B, please refer to the AC Adaptor (Model RD-9450) service manual.

MODEL RF-5000 or B

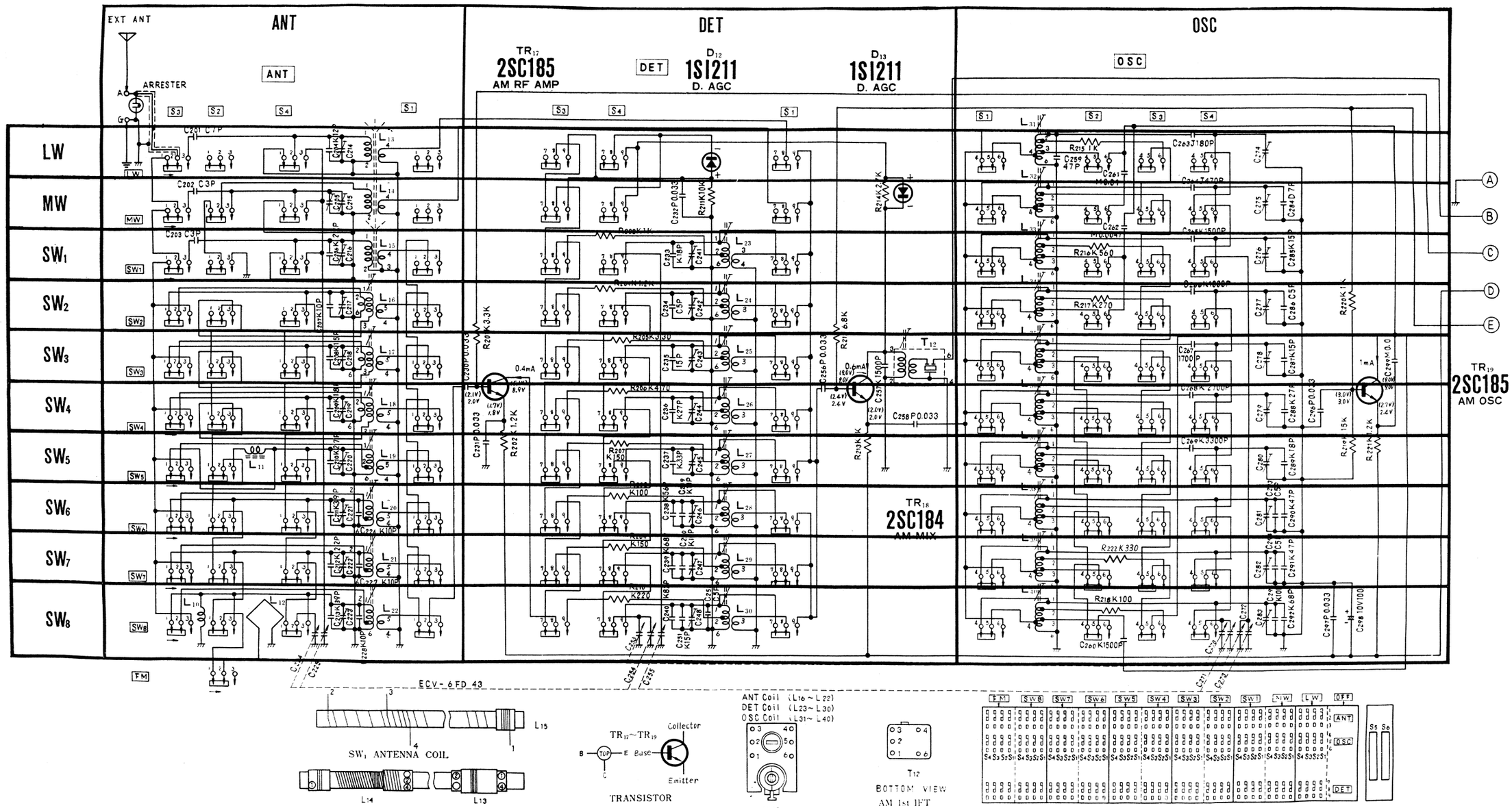

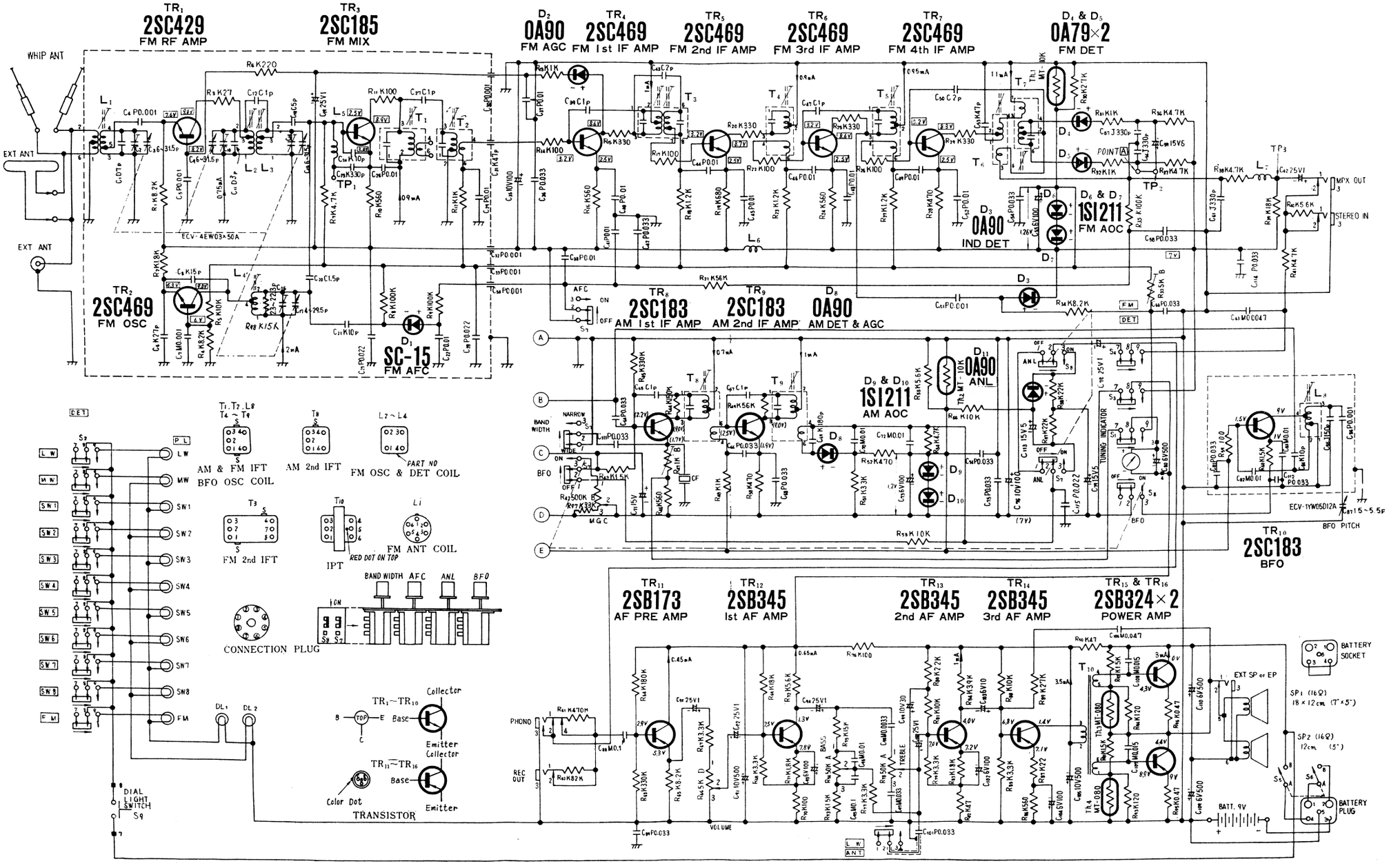

Notes:

1. $S_1 \sim S_4$: Band selector switch in "OFF" position.
2. S_5, S_6: Power source switch in "OFF" position.
3. S_7, S_8: Bandwidth, AFC, ANL & BFO switch in "OFF" position.
4. S_9: Dial light switch in "OFF" position.
5. DC voltage measurements are taken with circuit tester (10KΩ/Volt) from negative terminal of battery.
   ▭.....FM position. ( ).....AM position
6. Capital letters (J,K,M,P,C,D) in the circuit diagram show allowable tolerances of resistors and capacitors as follows:
   J=±5% K=±10% M=±20% P=+100% − 0%
   C=±0.25PF D=±0.5PF
7. Battery current:
   No Signal FM & AM.....20mA
   Maximum Output FM & AM.....250mA
8. PF=pico farad=mmf μF=micro farad=mfd
9. All resistor values in ohms (K=1000Ω).
10. All capacitor values in micro farads (P=mmf).

Fig. 12 Schematic Diagram

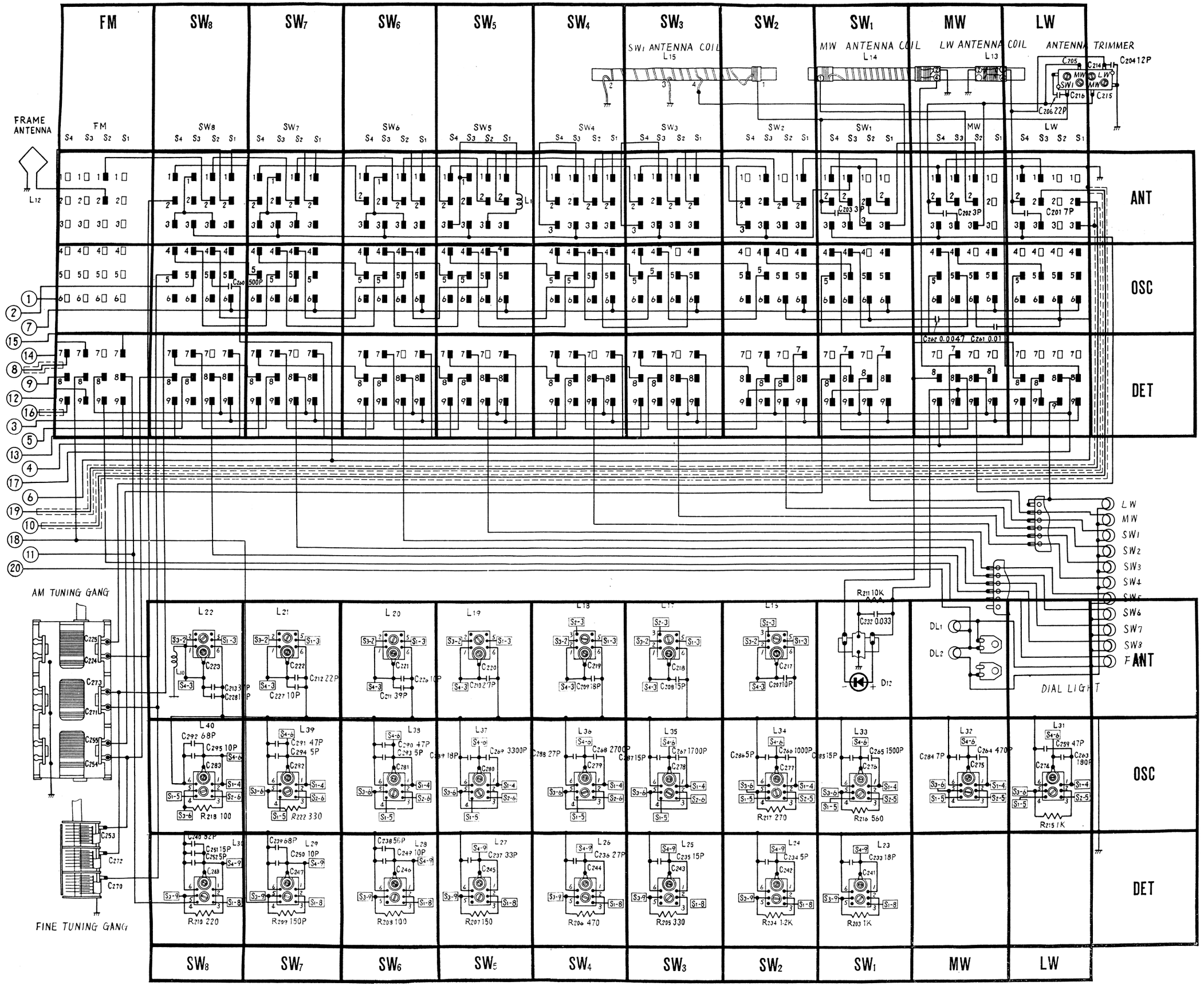
FM
SW8
SW7
SW6
SW5
SW4
SW3
SW2
SW1
MW
LW
SW1 ANTENNA COIL
L15
MW ANTENNA COIL
L14
LW ANTENNA COIL
L13
ANTENNA TRIMMER
C204 12P
C205
C214
C216
C215
C206 22P
FRAME ANTENNA
L12
ANT
OSC
DET
C203 3P
C202 3P
C201 7P
C260 500P
C262 0.0047
C261 0.01
LW
MW
SW1
SW2
SW3
SW4
SW5
SW6
SW7
SW8
FANT
R211 10K
C232 0.033
D12
DL1
DL2
DIAL LIGHT
AM TUNING GANG
FINE TUNING GANG
R218 100
R222 330
R217 270
R216 560
R215 1K
R210 220
R209 150P
R208 100
R207 150
R206 470
R205 330
R204 1.2K
R203 1K

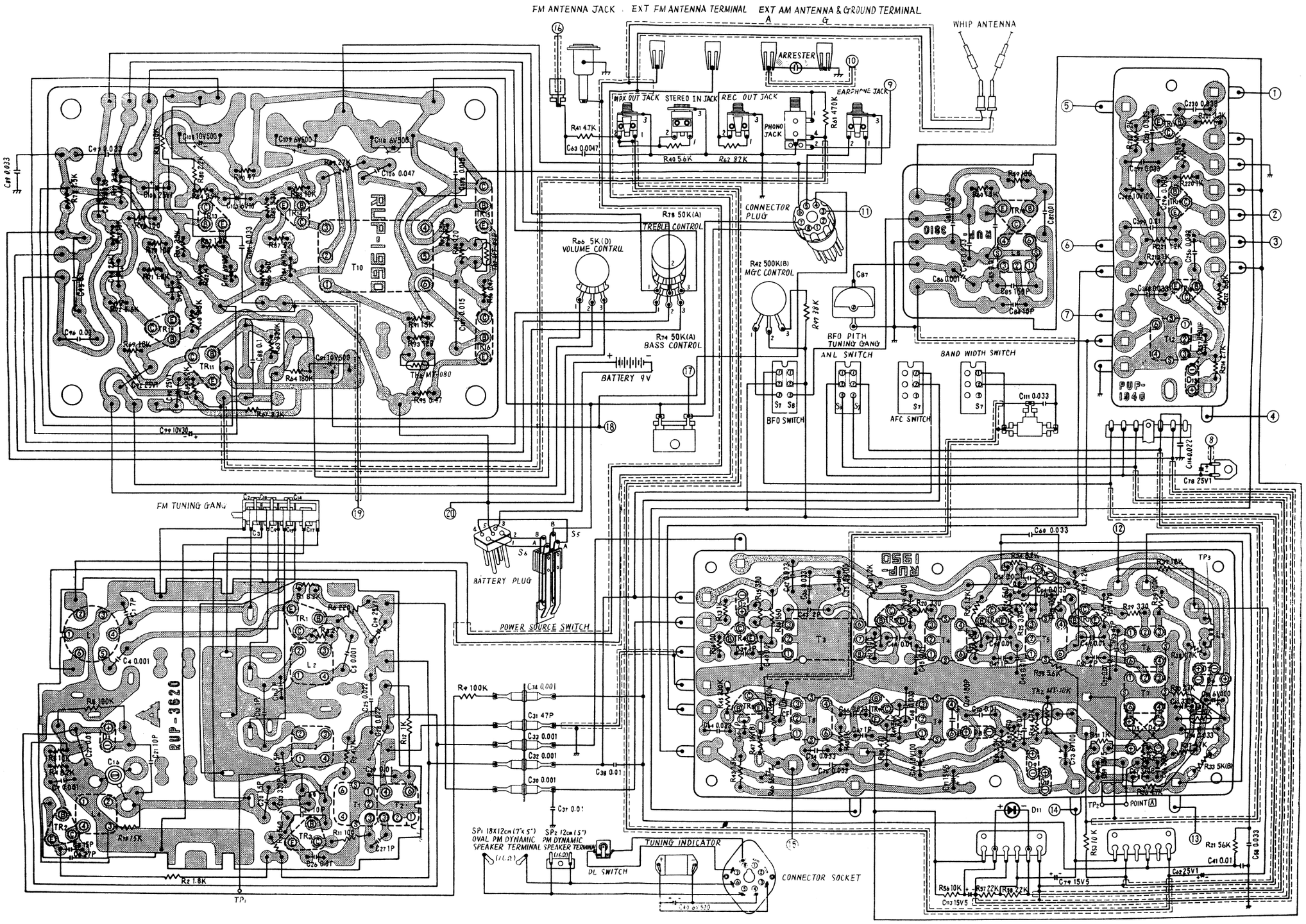

Notes:

1. All resistor values in ohms (K=1000Ω).
2. All capacitor values in micro farads (P=mmf).
3. Coil reference numbers (L_{16}~L_{40}) indicated in ▭ are connected to same numbers of band selector switch in the above drawing.
4. Black terminals of band selector switch ⟶ Leadwire connected.
   White terminals of band selector switch ⟶ Leadwire not connected.
5. Numbers indicated in ○ are connected to same numbers of band selector switch in the above drawing.

Fig. 14 Circuit Board Wiring View (Conductor Side)