MODEL RF-870HB

FM IF & DETECTOR ALIGNMENT WITH OSCILLOSCOPE

OSCILLOSCOPE

Set sweep selector of oscilloscope to "External Sweep". Apply 60~ sweep signal from sweep generator to horizontal input terminals of oscilloscope.

EQUIPMENT REQUIRED

Signal generator that provides 10.7 Mc/s marker.
Sweep generator that provides 10.7 Mc/s center frequency and 400 kc/s sweep width.
Set band selector switch to "FM".
Set volume control to minimum.
Set tone switch to news.
Set AFC switch to OFF.
Set power source voltage to 4.5 volts DC.

Note: Unsolder lead between test point **TP3** and point A before alignment and resolder it after alignment.

	SWEEP GENERATOR COUPLING	SIGNAL GENERATOR COUPLING	RADIO DIAL SETTING	INDICATOR	ADJUST	REMARKS
1	High side thru. .001μF to point **TP2**. Common to Chassis.	High side thru. .001μF to point **TP2**. Common to Chassis.	Point of non-interference. (on/about 90 Mc/s).	Connect vert. Amp. of scope to point **TP3**. Common to Chassis.	T1 (1st IFT) T2 (2nd IFT) T6 (3rd IFT) T7 (4th IFT) T9 (5th IFT) (P)	Adjust for maximum amplitude and proper linearity between ±100 kc/s markers. (Refer to Fig. 4)
2	〃	〃	〃	Connect vert. Amp. of scope to point **TP4**. Common to Chassis.	T10 (5th IFT) (S)	Adjust T10 so that 10.7Mc/s marker appers at the center. (Refer to Fig. 5)

Note: When aligning the Ratio Detector circuit, the wave form may appear as in Figs. 4 & 5 or upside-down.

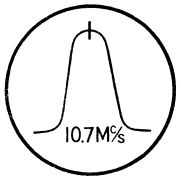

Fig. 4

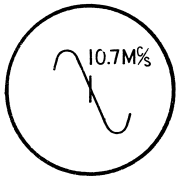

Fig. 5

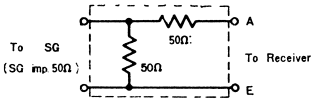

Fig. 6 FM Dummy Antenna

FM RF ALIGNMENT

Output of signal generator should be no higher than necessarv to obtain an output reading.
Set volume control to maximum.
Set band selector switch to FM.
Set tone switch to news.
Set AFC switch to OFF.
Set power source voltage to 4.5 volts DC.

	SIGNAL GENERATOR COUPLING	SIGNAL GENERATOR FREQUENCY	RADIO DIAL SETTING	INDICATOR	ADJUST	REMARKS
3	Connect to point **TP1** through FM Dummy antenna. Common to Chassis. (Refer to Fig. 6)	90 Mc/s (400~ Mod.)	90 Mc/s	Output meter across earphone jack. (Load 8Ω)	L6 (FM OSC Coil) L4 (FM Collector Coil)	Adjust for maximum output.
4	〃	106 Mc/s (400~ Mod.)	106 Mc/s	〃	C31 (FM OSC Trimmer) C21 (FM Collector Trimmer)	Adjust for maximum output. Repeat steps (3) and (4).

Note: As three output responses will be present, proper tuning is the center frequency.

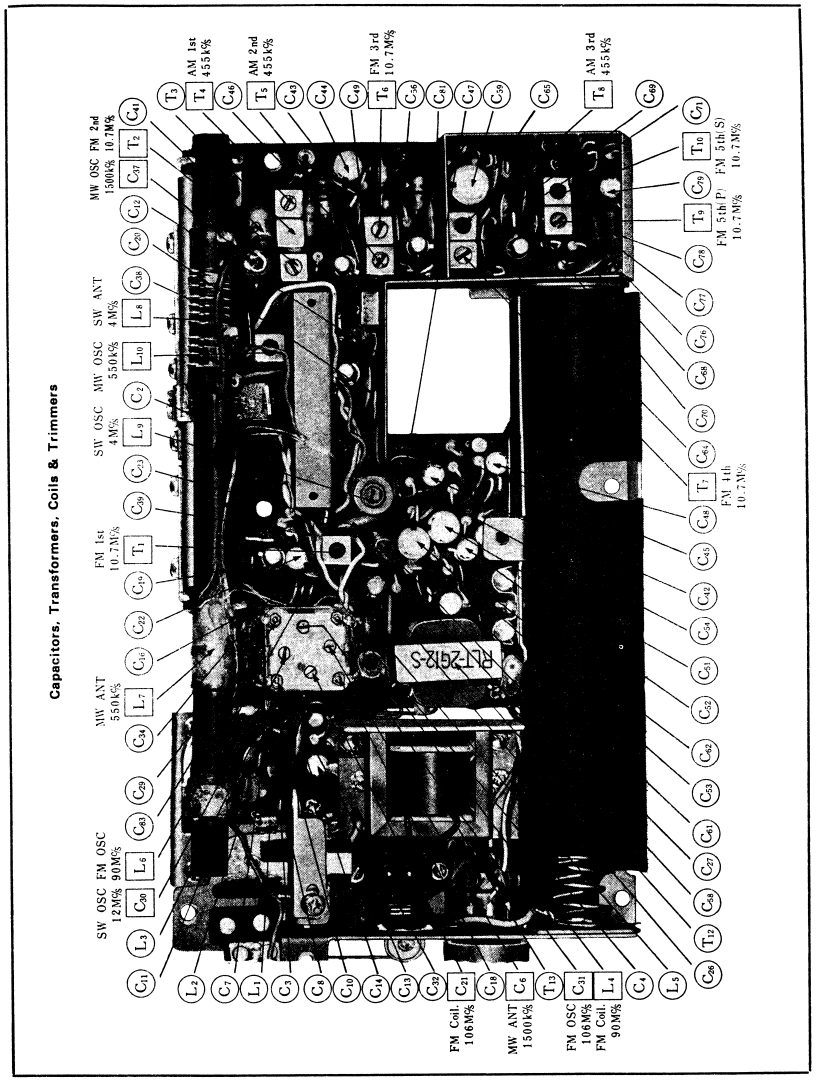

Fig. 9 Component View - Parts Identification, Alignment Points.

N185 National RF-870HB

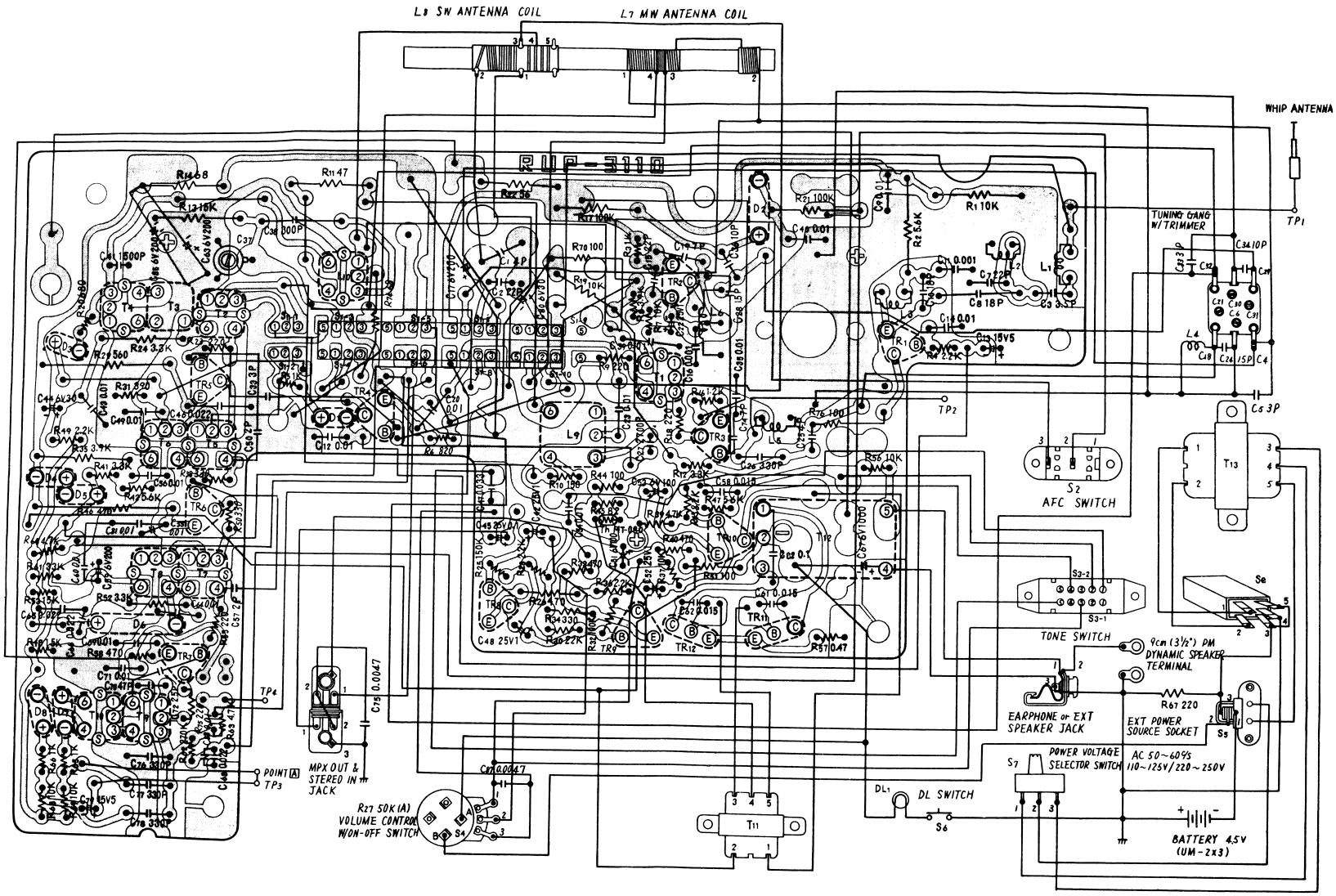

Notes:

1. All resistor values in ohms (K=1000Ω).
2. All capacitor values in micro farads (P=μμF).

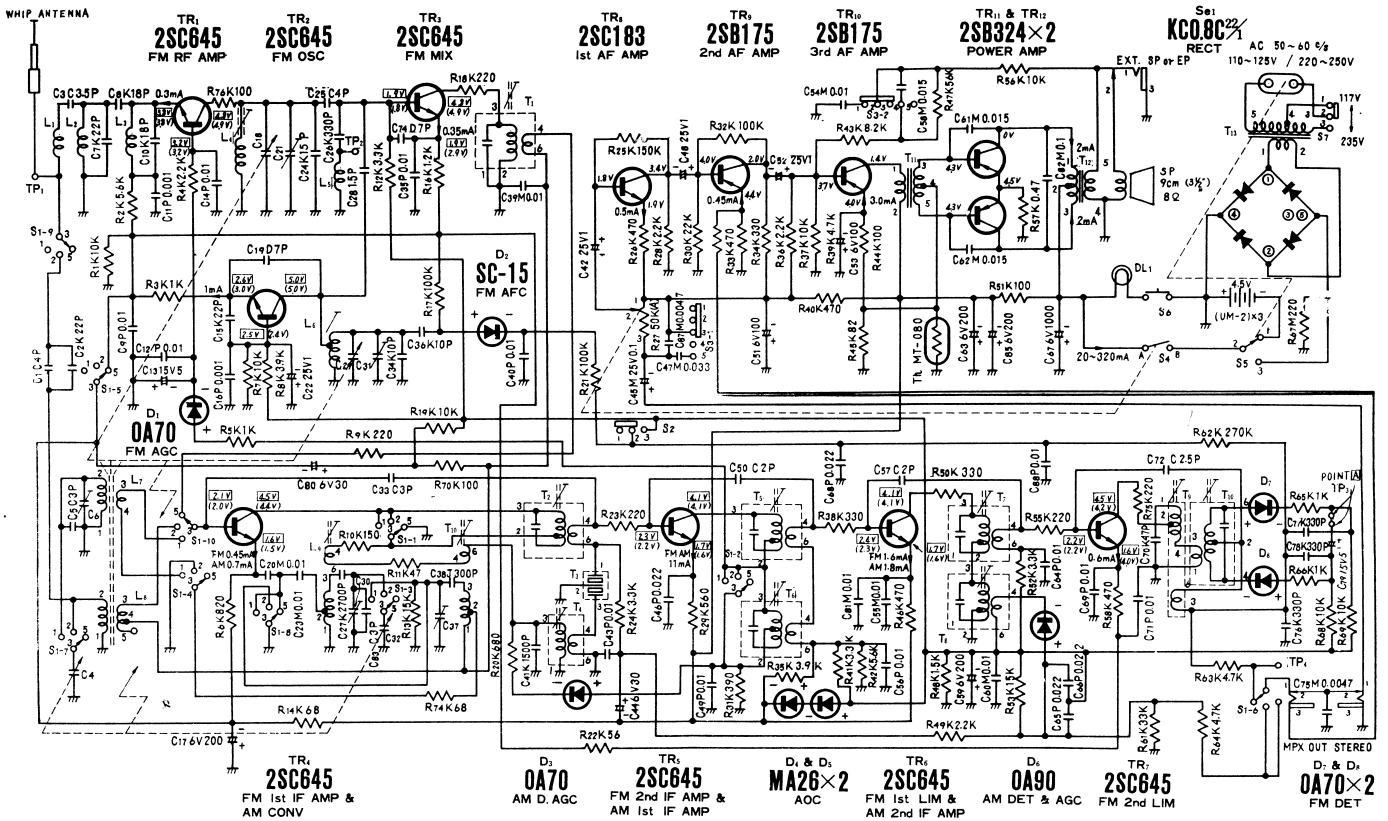

Notes:

1. S1-1~S1-10: Band selector switch in "FM" position.
2. S2: AFC switch in "ON" position.
3. S3-1~S3-2: Tone switch in "MUSIC" position.
4. S4: Power source switch in "OFF" position.
5. S5: AC-DC selector switch in "DC" position.
6. S6: Dial light switch in "OFF" position.
7. S7: Power source voltage selector switch in "117 V" position.
8. DC voltage measurements are taken with circuit tester (10 KΩ/V) from negative terminal of battery.
   ▭.....FM position. ( ).....AM position.
9. Capital letters (M, K, J, P, C, D) in the circuit diagram show allowable tolerance of resistors and capacitors as follows:
   M=±20% K=±10% J=±5% P=+100%
   C=±0.25PF D=±0.5PF − 0%
10. Battery current: No signal.....FM & AM 18mA
    Maximum Output...FM & AM 300mA
11. PF=pico farad=mmf
    μF=micro farad=MF
12. All resistor values in ohms (K=1000Ω).
13. All capacitor values in micro farads (P=μμF).

FM-AM 3-BAND 12-TRANSISTOR 8-DIODE PORTABLE RADIO

MODEL RF-870HB

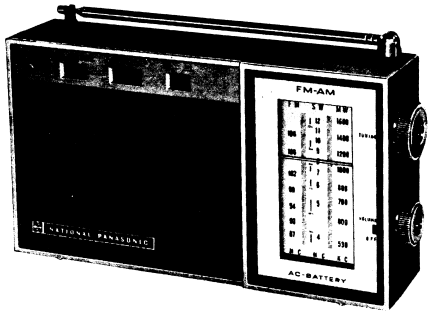

SPECIFICATIONS

Frequency Range:	FM 87~108 Mc/s MW 525~1605 kc/s (571~187m) SW 3.9~12 Mc/s (76.9~25m)
Intermediate Frequency:	FM 10.7 Mc/s AM 455 kc/s
Transistors:	2SC645 FM RF Amplifier 2SC645 FM Oscillator 2SC645 FM Mixer 2SC645 FM 1st IF Amp. & AM Converter 2SC645 FM 2nd IF Amp. & AM 1st IF Amp. 2SC645 FM 1st Limitter & AM 2nd IF Amp. 2SC645 FM 2nd Limitter 2SC183 1st AF Amplifier 2SB175 2nd AF Amplifier 2SB175 3rd AF Amplifier 2SB324, 2SB324 Power Amplifier (push-pull)
Diodes:	O A 7 0 FM AGC SC-15 FM AFC O A 7 0 AM D. AGC M A 2 6, M A 2 6 Operation Compensator O A 9 0 AM Detector & AGC O A 7 0, O A 7 0 FM Detector
Sensitivity:	FM 1μV for 50mW Output MW 50μV/m for 50mW Output SW 50μV/m for 50mW Output
Power Output:	600mW Undistorted 1W Maximum
Power Source:	AC (110~120V/220~250V 50~60c/s) or Battery (three "C" Size Flashlight Batteries 4.5V) (NATIONAL UM-2 or equivalent)
Power Consumption:	2W (AC)
Speaker:	9cm (3½") PM Dynamic Speaker, 8Ω
Cabinet Dimensions:	214(Wide)×123(High)×55(Deep)mm (8⅞"×4⅞"×2⅛")
Weight:	1.23 kg. (2 lb. 11 oz.) with Batteries

Notes:

1. Remove dial back plate.
2. Dial cord length is 90cm (35⅞").
3. Tuning gang is positioned at maximum capacity.
4. Arrow marks (1~10) indicate correct order and direction of stringing dial cord.
5. Cement dial cord ends.

To Mount Dial Pointer

1. Set tuning gang to fully closed position.
2. Set dial pointer to start point of pointer guide.
3. Attach dial cord to dial pointer.

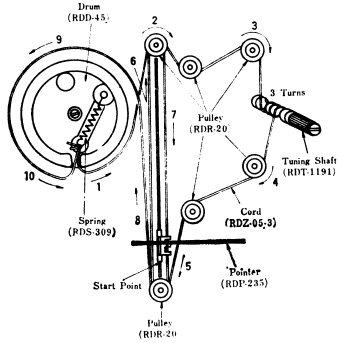

Dial Cord Stringing Guide.

ALIGNMENT INSTRUCTION

FREQUENCY & DISTANCE ON DIAL SCALE

To accurately align the proper frequencies to the dial scale, refer to Table and mark the edge of the dial scale plate accordingly using the "Start point" mark on the dial scale as a reference point.

TABLE

Band	Frequency	Distance from "Start Point"	
MW	550 kc/s	7.1mm	9/32"
	1500 kc/s	64mm	2 17/32"
SW	4 Mc/s	5mm	3/16"
	12 Mc/s	67.1mm	2 23/32"
FM	90 Mc/s	11.5mm	7/16"
	106 Mc/s	48.8mm	1 29/32"

MW, SW IF & RF ALIGNMENT

Output of signal generator should be no higher than necessary to obtain an output reading.
Set volume control to maximum.
Set tone switch to news
Set power source voltage to 4.5 volts DC.

	Band Switch Position	SIGNAL GENERATOR COUPLING	SIGNAL GENERATOR FREQUENCY	RADIO DIAL SETTING	INDICATOR	ADJUST	REMARKS
1	MW	Fashion loop of several turns of wire and radiate signal into loop of receiver.	455 kc/s (400~ Mod.)	Point of non-interference (on/about 600 kc/s)	Output meter across earphone jack (Load 8Ω)	T_4 (1st IFT) T_5 (2nd IFT) T_8 (3rd IFT)	Adjust for maximum output.
2	MW	〃	550 kc/s (400~ Mod.)	550 kc/s	〃	L_{10} (OSC Coil) L_7 (ANT Coil)	Adjust for maximum output by sliding coil (L_7) along ferrite core.
3	MW	〃	1500 kc/s (400~ Mod.)	1500 kc/s	〃	C_{37} (OSC Trimmer) C_6 (ANT Trimmer)	Adjust for maximum output. Repeat steps (2) and (3).
4	SW	〃	4 Mc/s (400~ Mod.)	4 Mc/s	〃	L_9 (OSC Coil) L_8 (ANT Coil)	Adjust for maximum output by sliding coil (L_8) along ferrite core.
5	SW	〃	12 Mc/s (400~ Mod.)	12 Mc/s	〃	C_{30} (OSC Trimmer)	Adjust for maximum output. Repeat steps (4) and (5).

Note: Cement antenna bobbin with wax after completing alignment.