N176 National RF-7270

# FM/AM PORTABLE AND CAR RADIO WITH BUILT-IN CASSETTE TAPE RECORDER

## MODEL RF-7270

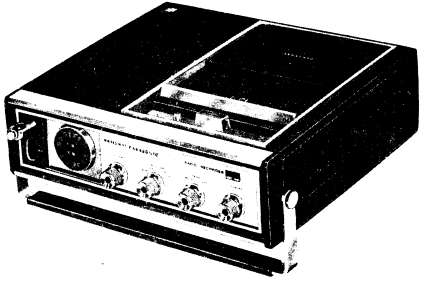

MODEL RF-7270

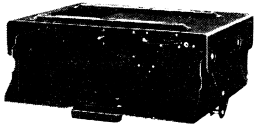

MODEL RD-7270CA

## SPECIFICATIONS

Frequency Range: FM 87~108 Mc/s
AM 525~1605 kc/s (571~187m)

Intermediate Frequency: FM 10.7 Mc/s
AM 455 kc/s

Transistors:

| | |
|---|---|
| 2SC429 | FM RF Amplifier |
| 2SC645 | FM Converter |
| 2SC645 | FM 1st IF Amp. & AM Converter |
| 2SC645 | FM 2nd IF Amp. & AM 1st IF Amp. |
| 2SC645 | FM 3rd IF Amp. & AM 2nd IF Amp. |
| 2SB173 | Pre-Amplifier |
| 2SB175 | 1st Equalizer Amplifier |
| 2SB175 | 2nd Equalizer Amplifier |
| 2SB175 | 3rd Equalizer Amplifier |
| 2SB173 | 1st AF Amplifier |
| 2SB175 | 2nd AF Amplifier |
| 2SB324 } 2SB324 } | Power Amplifier (push-pull) |
| 2SB175 | AC Bias Oscillator |
| 2SB324 | AC Bias Power Amplifier |
| 2SB175 | 1st Recording Level Indicator Amp. |
| 2SB178 | 2nd Recording Level Indicator Amp. |

Diodes:

| | |
|---|---|
| OA90 | FM AGC |
| SC-15 | FM AFC |
| 1S1211 } 1S1211 } | Operation Compensator |
| OA90 } OA90 } | FM Detector |
| OA90 | AM Detector & AGC |
| 1S1211 | Operation Compensator |
| OA90 | Recording Signal Rectifier |
| FR-IP | Recording Level Rectifier |

Power Output:
1W Undistorted } Portable (7.5V)
1.5W Maximum
1.2W Undistorted } Car (15V)
2W Maximum

Batteries: 7.5V (Five "D" size flashlight batteries)
(NATIONAL UM-1 or equivalent)
or Car Battery (6V/12V)

Speaker: 15×10cm(6"×4")Oval, PM Dynamic Speaker, 8Ω

Cabinet Dimensions: 271(Wide)×256(High)×86(Deep)mm
(10⅝"×10⅛"×3⅜")

Weight: 4kg. (8 lb. 13 oz.) with Batteries

Tape Deck:

| | |
|---|---|
| Recording System: | AC Bias 35 kc/s |
| Erasure System: | AC Erase 35 kc/s |
| Tape Speed: | 1⅞ ips. |
| Frequency Response: | 120~6,000 c/s |
| Input Impedance: | Microphone 2 KΩ, Auxiliary 100KΩ |
| Playing Time: | 1 Hour (Both Sides) |
| Cassette Tape: | 91m(3600") of Triple Play Tape(18μ) |



## DIAL CORD STRINGING GUIDE

**Notes:**
1. Dial cord length is 120cm (47¼").
2. Remove dial scale.
3. Tuning gang is turned fully counter-clockwise.
4. Set drum (Part No. RDD-3036) so that stopper of drum hits protuberance of chassis as illustrated in Fig. 5.
5. Arrow marks (1~8) indicate correct order and direction of stringing dial cord.
6. Cement dial cord ends.

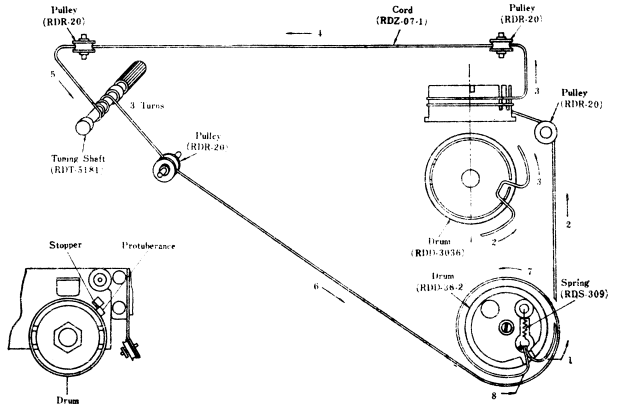


Fig. 5 Fig. 6

## ALIGNMENT POINTS - RADIO

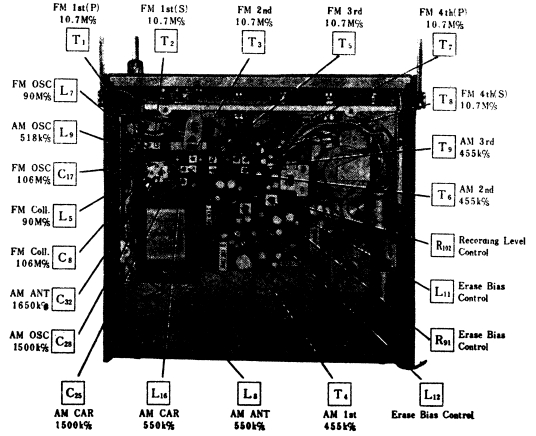


Fig. 7 Top View.

# N176 National RF-7270

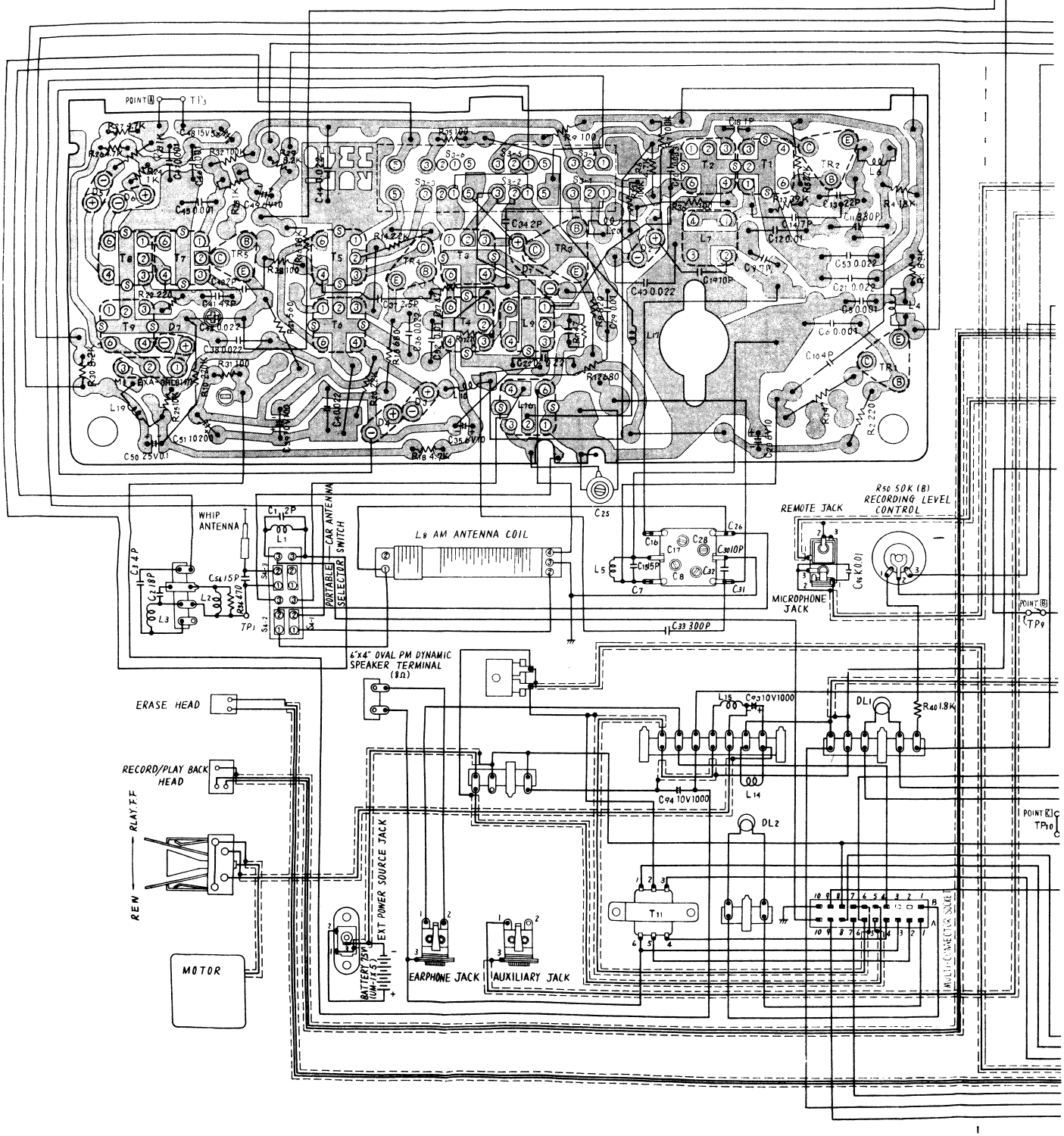

**MODEL RF-7270**

## ALIGNMENT INSTRUCTION-RADIO

### AM-IF & PORTABLE RF ALIGNMENT

Output of signal generator should be no higher than necessary to obtain an output reading.
Set volume control to maximum. Set band selector switch to AM.
Set tone control to high (treble). Set power source voltage to 7.5 volts DC.

| | SIGNAL GENERATOR COUPLING | SIGNAL GENERATOR FREQUENCY | RADIO DIAL SETTING | INDICATOR | ADJUST | REMARKS |
|---|---|---|---|---|---|---|
| 1 | Fashion loop of several turns of wire and radiate signal into loop of receiver. | 455 kc/s (1000~ Mod.) | Tuning gang fully closed | Output meter across voice coil. | $T_4$ (1st IFT) $T_6$ (2nd IFT) $T_9$ (3rd IFT) | Adjust for maximum output. |
| 2 | 〃 | 518 kc/s (1000~ Mod.) | Tuning gang fully closed | 〃 | $L_9$ (OSC Coil) | 〃 |
| 3 | 〃 | 550 kc/s (1000~ Mod.) | 550 kc/s | 〃 | $L_8$ (ANT Coil) | Adjust for maximum output by sliding coil ($L_8$) along ferrite core. |
| 4 | 〃 | 1500 kc/s (1000~ Mod.) | 1500 kc/s | 〃 | $C_{28}$ (ANT Trimmer) | Adjust for maximum output. |
| 5 | 〃 | 1650 kc/s (1000~ Mod.) | Tuning gang fully open. | 〃 | $C_{32}$ (OSC Trimmer) | Adjust for maximum output. Repeat steps 2 through 5. |

**Note:** Cement antenna bobbin with wax after completing alignment.

### AM-CAR RF ALIGNMENT

Output of signal generator should be no higher than necessary to obtain output reading.
Set volume control to maximum. Set band selector switch to AM.
Set portable-Car antenna selector switch to "CAR". Set power source voltage to 15 volts DC.
Set tone control to high (treble).

| | SIGNAL GENERATOR COUPLING | SIGNAL GENERATOR FREQUENCY | RADIO DIAL SETTING | INDICATOR | ADJUST | REMARKS |
|---|---|---|---|---|---|---|
| 6 | Refer to Fig. 9 | 550 kc/s (1000~ Mod.) | 550 kc/s | Output meter across voice coil. | $L_{16}$ (ANT Coil) | Adjust for maximum output. |
| 7 | 〃 | 1500 kc/s (1000~ Mod.) | 1500 kc/s | 〃 | $C_{25}$ (ANT Trimmer) | Adjust for maximum output Repeat steps 6 and 7. |

### RECOMMENDED EQUIPMENT CONNECTION FOR AM CAR RF ALIGNMENT

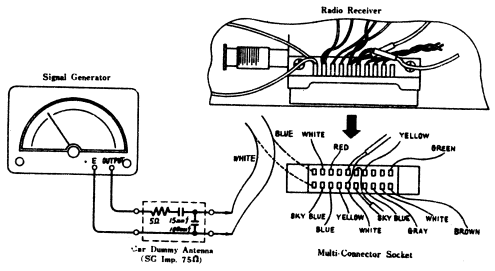


Fig. 9

**Notes:**
Remove leads to terminals 10A & B of multi-connector socket ($S_1$-A~$S_{10}$-B). Then connect hot side of signal generator to white lead and ground lead to blue lead.

**MODEL RF-7270**

### FM-IF & DETECTOR ALIGNMENT WITH OSCILLOSCOPE

**OSCILLOSCOPE**
Set sweep selector of oscilloscope to "External Sweep". Apply 60~ sweep signal from sweep generator to horizontal input terminals of oscilloscope.

**EQUIPMENT REQUIRED**
Signal generator that provides 10.7 Mc/s marker.
Sweep generator that provides 10.7 Mc/s center frequency and 400 kc/s sweep width.
Set band selector switch to FM.
Set volume control to minimum.
Set tone control to high (treble).
Set power source voltage to 7.5 volts DC.

**Note:** Unsolder lead between test point $TP_3$ and point A before alignment and resolder it after alignment.

| | SWEEP GENERATOR COUPLING | SIGNAL GENERATOR COUPLING | RADIO DIAL SETTING | INDICATOR | ADJUST | REMARKS |
|---|---|---|---|---|---|---|
| 1 | High side thru. .001mfd to point $TP_2$. Common to chassis. | High side thru. .001mfd to point $TP_2$. Common to chassis. | Point of non-interference (on/about 100 Mc/s) | Connect vert. Amp. of scope to point $TP_3$. Common to chassis. | $T_1$ (FM 1st IFT) (P) $T_2$ (FM 1st IFT) (S) $T_3$ (FM 2nd IFT) $T_5$ (FM 3rd IFT) $T_7$ (FM 4th IFT) (P) | Adjust for maximum amplitude and proper linearity between ±100kc/s markers. (Refer to Fig. 10) |
| 2 | 〃 | 〃 | 〃 | Connect vert. Amp. of scope to point $TP_4$. Common to chassis. | $T_8$ (FM 4th IFT) (S) | Adjust $T_8$ so that 10.7 Mc/s marker appears in the center. (Refer to Fig. 11) |

**Note:** When aligning the Ratio Detector circuit, the wave form may appear as in Figs. 10 & 11 or upside-down.

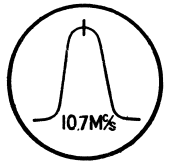


Fig. 10

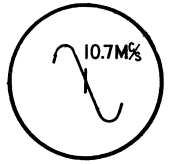


Fig. 11

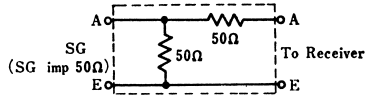


Fig. 12 FM Dummy Antenna

### FM-RF ALIGNMENT

Output of signal generator should be no higher than necessary to obtain an output reading.
Set volume control to maximum.
Set tone control to high (treble).
Set band selector switch to FM.
Set power source voltage to 7.5 volts DC.

| | SIGNAL GENERATOR COUPLING | SIGNAL GENERATOR FREQUENCY | RADIO DIAL SETTING | INDICATOR | ADJUST | REMARKS |
|---|---|---|---|---|---|---|
| 3 | Connect Point $TP_1$ to through FM Dummy antenna. Common to chassis. (Refer to Fig. 12) | 90 Mc/s (400~ Mod.) | 90 Mc/s | Output meter across voice coil | $L_7$ (FM OSC Coil) $L_5$ (FM Collector Coil) | Adjust for maximum output. |
| 4 | | 106 Mc/s (400~ Mod.) | 106 Mc/s | 〃 | $C_{17}$ (FM OSC Trimmer) $C_5$ (FM Collector Trimmer) | Adjust for maximum output. Repeat steps (3) and (4). |

**Note:** As three output responses will be present, proper tuning is the center frequency.

# MODEL RF-7270

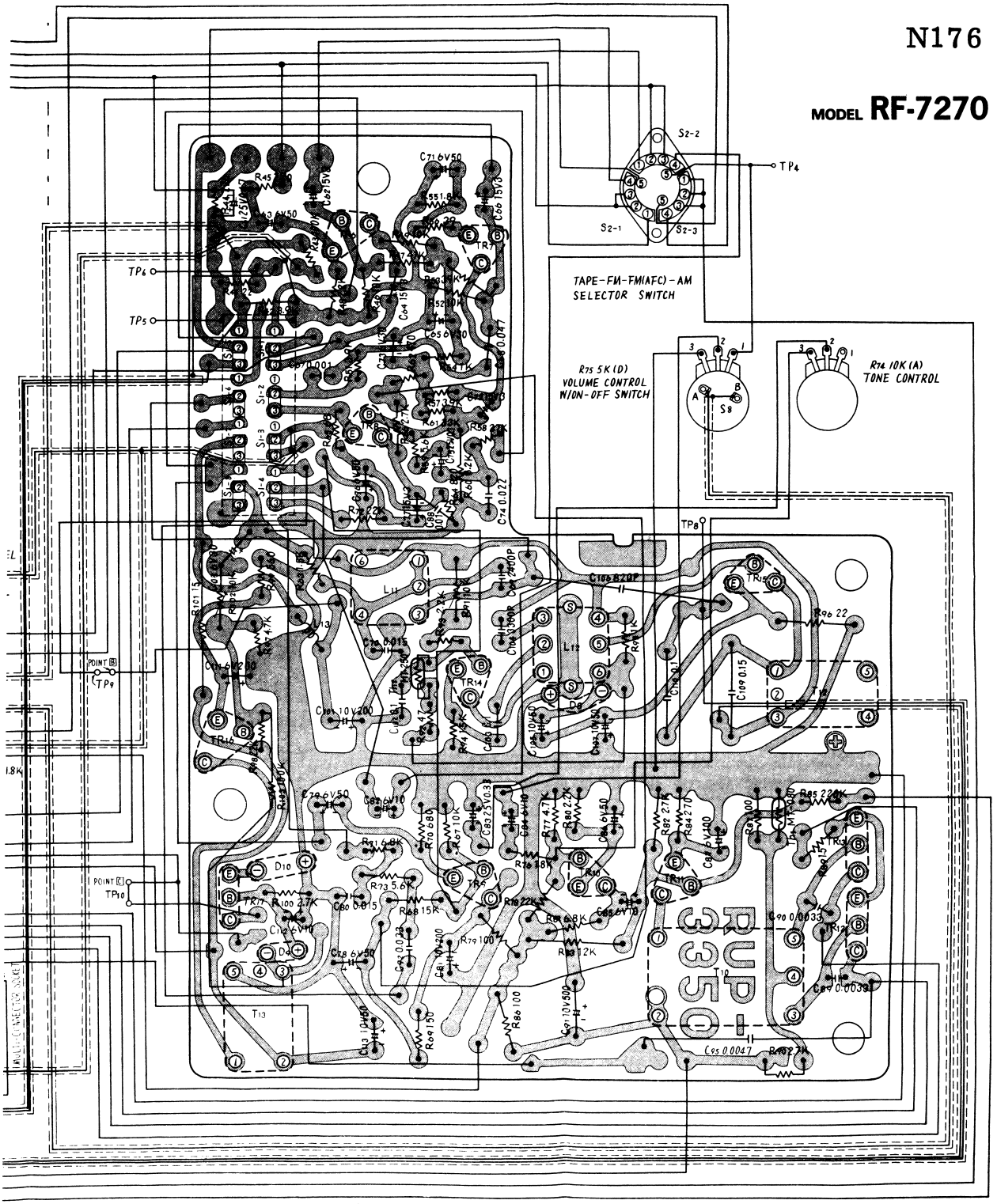


**Notes :**

1. All resistor values in ohms (K=1000Ω).
2. All capacitor values in micro farads (P=μμF).

Fig. 13

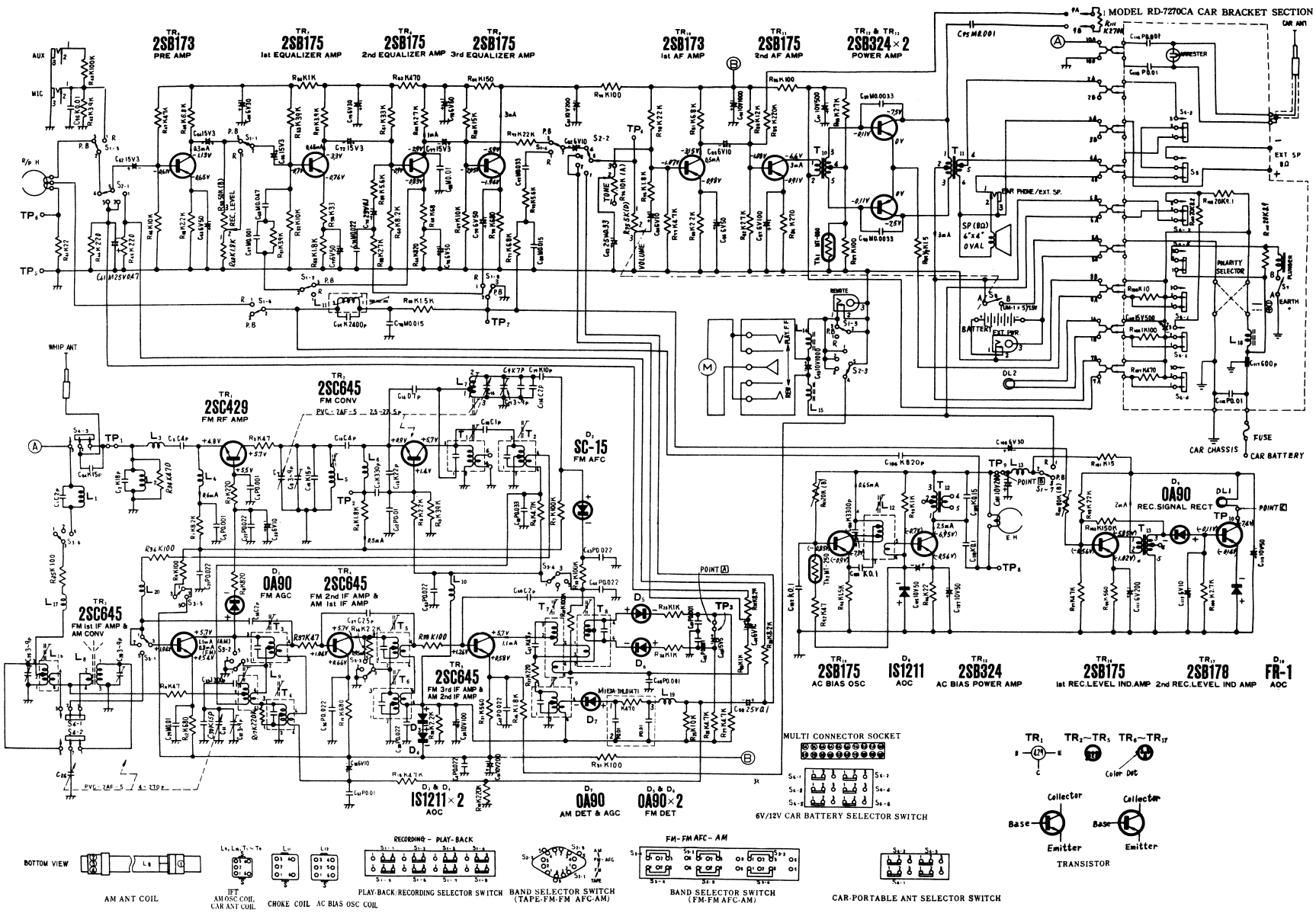


**Notes :**

1. S1-1~S1-8 : Play-Back/Recording selector switch in "Play-Back" position.
2. S2-1~S2-3 : Tape-FM-FM(AFC)-AM selector switch in "Tape" position.
3. S3-1~S3-6 : FM-FM(AFC)-AM selector switch in "FM" position.
4. S4-1~S4-3 : Car-Portable antenna selector switch in "Portable" position.
5. S5 : Built-In/EXT speaker selector switch in "Built-In" position.
6. S6-1~S6-6 : 6V/12V Car battery selector switch in "6V" position.
7. S7 : Plunger switch in "Locked" position.
8. S8 : Power source switch in "OFF" position.
9. DC voltage measurements are taken with circuit tester 10KΩ/Volt.
   TR1~TR5 .....from negative terminal of battery.
   TR6~TR17 .....from positive terminal of battery.
   ( ) .....Tape playing position
10. Capital letters (M, K, J, P, C, D) in the circuit diagram show allowable tolerances of resistors and capacitors as follows :
    M=±20% K=±10% J=±5% P=+100% − 0% C=±0.25PF D=±0.5PF
11. Battery current : No signal.....22mA } Portable
    Maximum output .....300mA }
    No signal.....1A } Car Battery (12V)
    Maximum output..... 1.2A }
12. PF=pico farad=mmf
    μF=micro farad=MF
13. All resistor values in ohms (K=1000Ω).
14. All capacitor values in micro farads (P=μμF).