NATIONAL PANASONIC

RADIO SERVICE MANUAL

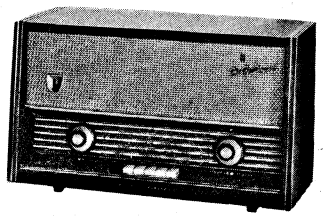

MODEL RE-484

4-BAND 6-TUBE TABLE MODEL RADIO

SPECIFICATIONS

Frequency Range:	MW 525~1605KC (571~187m)
	SW_1 1.6~4.5MC (136.4~42.9m)
	SW_2 4.5~12MC (42.9~13.6m)
	SW_3 12~26.1MC (25~11.5m)
Intermediate Frequency:	455KC
Tubes:	6BE6 Converter
	6BA6 IF Amplifier
	6AV6 Detector, AVC & AF Amplifier
	6BQ5 Output
	6X4 Rectifier
	6DA5 Tuning Indicator
Sensitivity:	MW 20μV for 50mW Output
	SW_1 20μV for 50mW Output
	SW_2 30μV for 50mW Output
	SW_3 30μV for 50mW Output
Power Output:	3.5 Watt Undistorted
	5 Watt Maximum
Power Source:	AC 50~60c/s 110V/200V/225V/250V
Power Consumption:	48W
Speaker:	Two 16cm (6½") PM Dynamic Speaker
Dimensions:	576(Wide)×343.5(High)×241(Deep) mm
	(22 11/16"×13½"×9½"mm)
Weight:	9.3 kgs. (20 lbs. 8 ozs.)

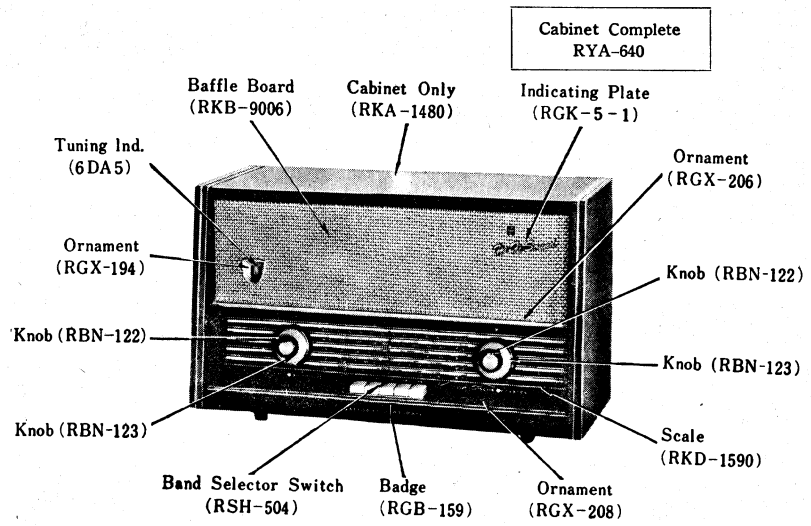

Fig. 5 Cabinet & Appearance Parts Identification.

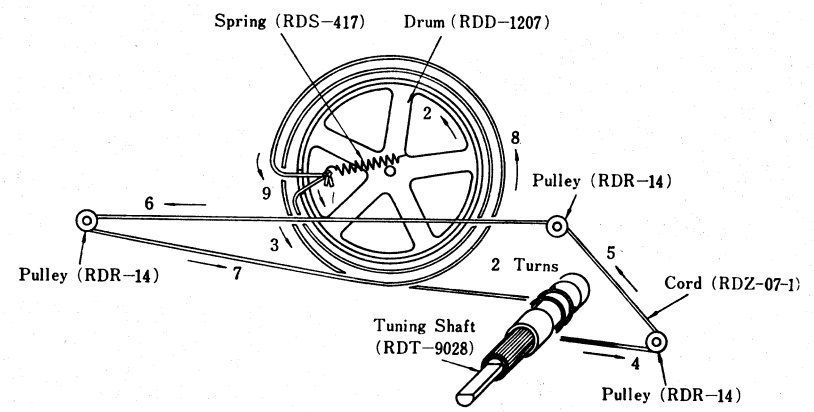

Notes:

1. Remove dial back plate.
2. Arrow marks (1~9) indicate correct order and direction of stringing dial cord.
3. Tuning gang is posistioned at maximum capacity.
4. Cement dial cord ends.
5. Dial cord length is 160cm (63").

NATIONAL MODEL RE-484

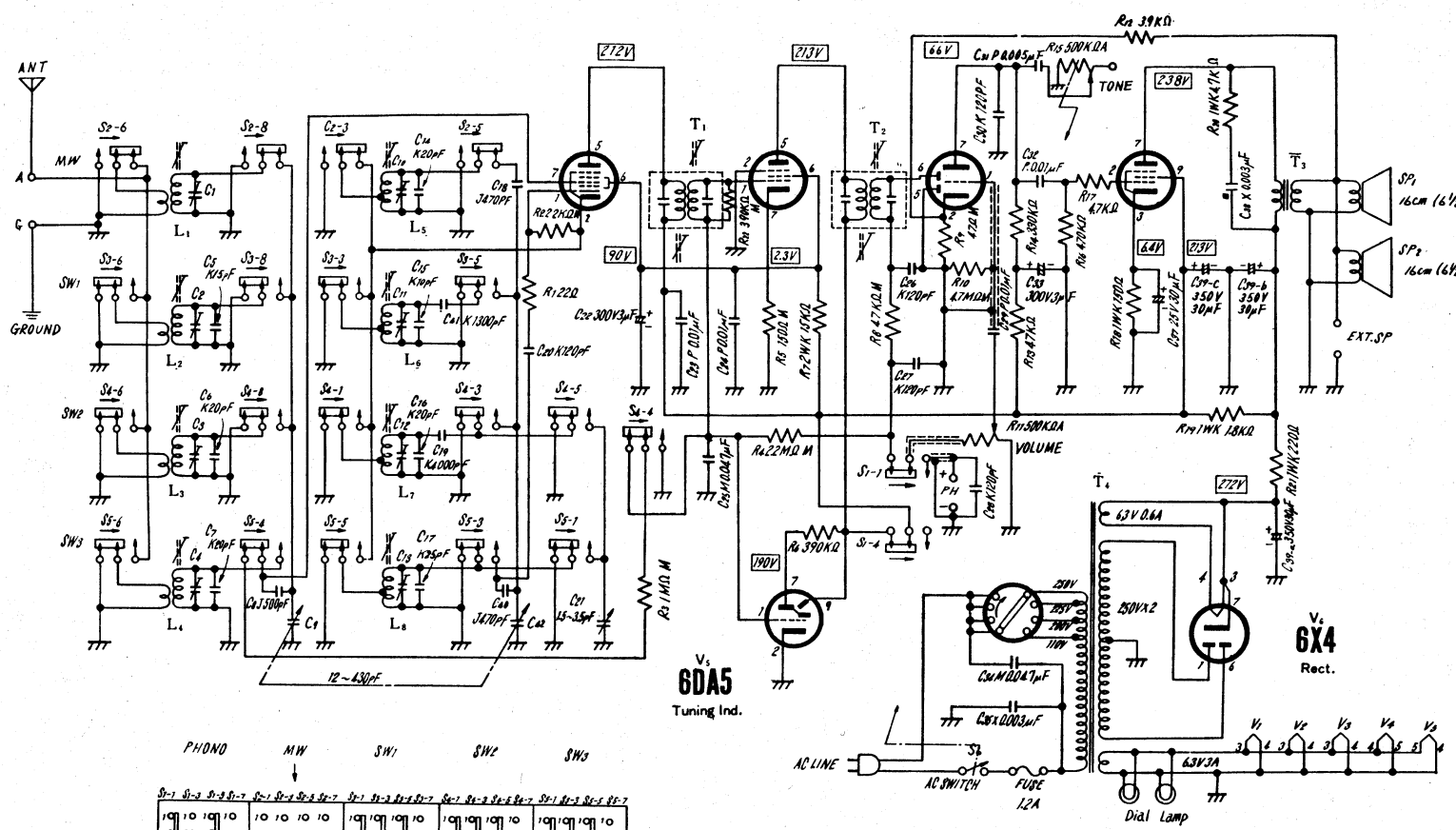

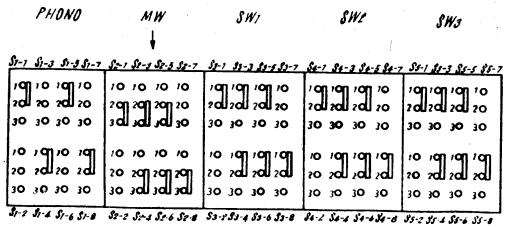

Band Selector Switch

Notes:

1. $S_1 \sim S_5$: Band selector switch in "MW" position.
2. S_6 : Power source switch in "OFF" position.
3. DC Voltage and current measurements are taken with circuit tester (10KΩ/V). (Band selector set to MW & No signal applied)
4. Capital letters (M, K, J, P) in the circuit diagram show allowable tolerance of resistors and capacitors as follows.
   M = ±20% K = ±10% J = ±5% P = +100% − 0%
5. PF = pico farad = mmf
   μF = micro farad = MF

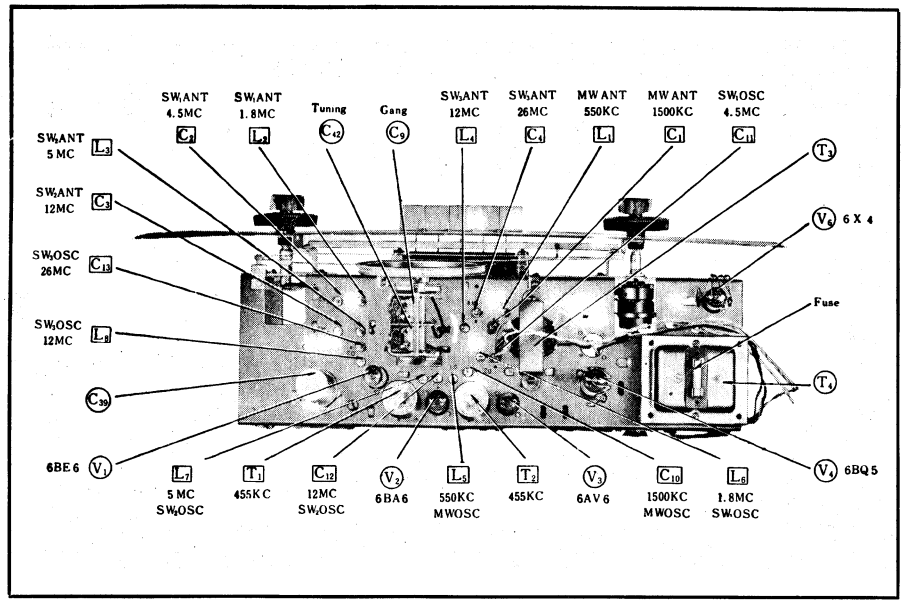

Fig. 2 Chassis Top View - Parts Identification, Alignment Points.

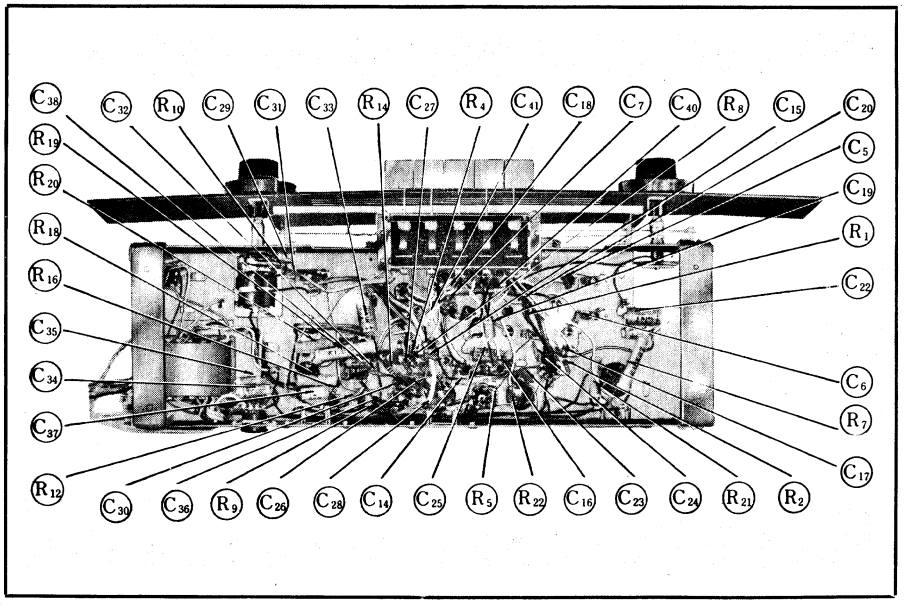

Fig. 3 Chassis Bottom View - Parts Identification,

ALIGNMENT INSTRUCTION

CAUTION: One side of AC line is connected to chassis. Use an isolation transformer between wall outlet and receiver throughout alignment. Maintain line voltage at rated voltage.

Output of signal generator should be no higher than necessary to obtain an output reading.
Set Volume control to maximum
Set Tone control to High. (Treble)
Set Fine tuning to ▲ mark position.

	Band Switch Position	SIGNAL GENERATOR COUPLING	SIGNAL GENERATOR FREQUENCY	RADIO DIAL SETTING	INDICATOR	ADJUST	REMARKS
1	MW	High side to antenna stator lug on tuning gang thru. 0.01μF Common to chassis.	455KC (400~ Mod.)	Point of non-interference. (on about 600KC)	Output meter across voice coil.	T_1 (1st IFT) T_2 (2nd IFT)	Adjust for maximum output.
2	MW	Connect to EXT. Antenna & Ground terminals thru. dummy antenna	550KC (400~ Mod.)	550KC	〃	L_6 (OSC coil) L_1 (ANT coil)	Adjust for maximum output.
3	MW	〃	1500KC (400~ Mod.)	1500KC	〃	C_{10} (OSC Trimmer) C_1 (ANT Trimmer)	Adjust for maximum output. Repeat steps (2) and (3)
4	SW_1	〃	1.8MC (400~ Mod.)	1.8MC	〃	L_8 (OSC Coil) L_2 (ANT Coil)	Adjust for maximum output.
5	SW_1	〃	4.5MC (400~ Mod.)	4.5MC	〃	C_{11} (OSC Trimmer) C_2 (ANT Trimmer)	Adjust for maximum output. Repeat steps (4) and (5)
6	SW_2	〃	5MC (400~ Mod.)	5MC	〃	L_7 (OSC Coil) L_3 (ANT Coil)	Adjust for maximum output.
7	SW_2	〃	12MC (400~ Mod.)	12MC	〃	C_{12} (OSC Trimmer) C_3 (ANT Trimmer)	Adjust for maximum output. Repeat steps (6) and (7)
8	SW_3	〃	12MC (400~ Mod.)	12MC	〃	L_5 (OSC Coil) L_4 (ANT Coil)	Adjust for maximum output.
9	SW_3	〃	26MC (400~ Mod.)	26MC	〃	C_{13} (OSC Trimmer) C_4 (ANT Trimmer)	Adjust for maximum output. Repeat steps (8) and (9)

Note: Cement the antenna bobbin with lacquer or wax after the completion of the alignment.

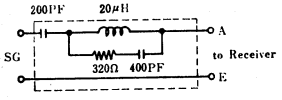

Fig. 4 Dummy Antenna