Panasonic
CQ-RDP153N
PTY
TUNE
TRACK
AF
RANDOM
SCAN
REPEAT
MUTE
1
2
3
4
5
6
TA

<CQ-RDP153N>

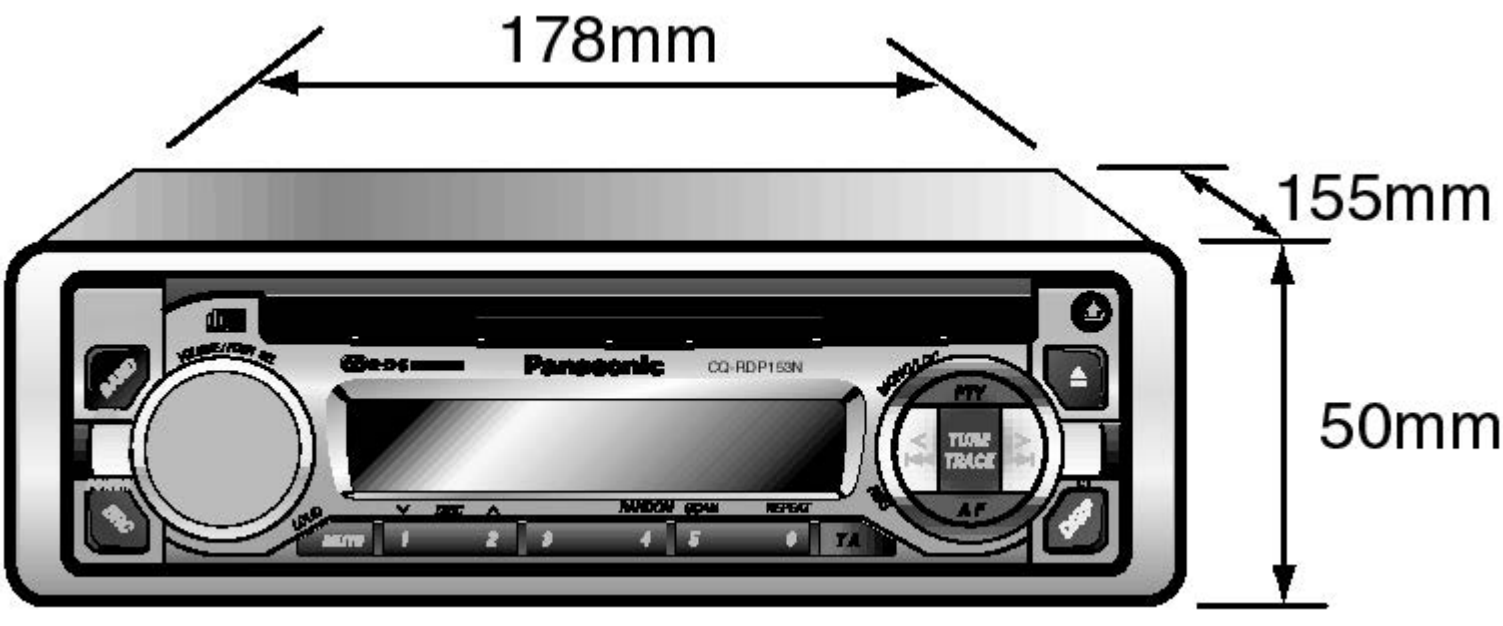
178mm
155mm
50mm
Panasonic
CQ-RDP153N
PTY
TUNE
TRACK
AF
RANDOM
SCAN
REPEAT
MUTE
TA

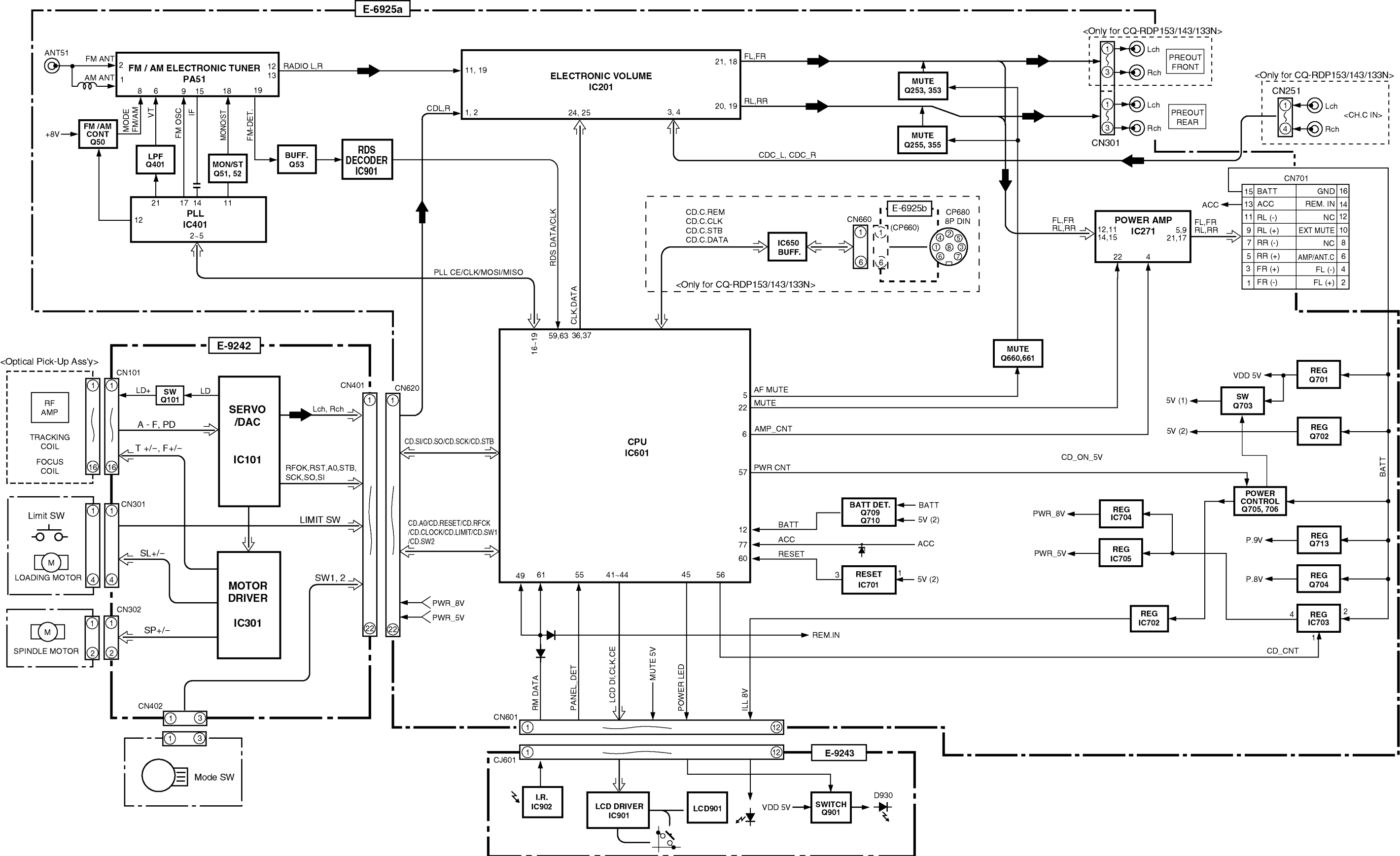
E-6925a
ANT51
FM ANT
AM ANT
FM / AM ELECTRONIC TUNER
PA51
RADIO L,R
+8V
FM /AM CONT Q50
MODE FM/AM
VT
FM OSC
IF
MONO/ST
FM-DET.
LPF Q401
MON/ST Q51, 52
BUFF. Q53
RDS DECODER IC901
PLL IC401
ELECTRONIC VOLUME IC201
CDL,R
FL,FR
RL,RR
MUTE Q253, 353
MUTE Q255, 355
CDC_L, CDC_R
<Only for CQ-RDP153/143/133N>
PREOUT FRONT
PREOUT REAR
Lch
Rch
CN301
CN251
<CH.C IN>
CN701
BATT
GND
ACC
REM. IN
RL (-)
NC
RL (+)
EXT MUTE
RR (-)
RR (+)
AMP/ANT.C
FR (+)
FL (-)
FR (-)
FL (+)
POWER AMP IC271
FL,FR
RL,RR
CD.C.REM
CD.C.CLK
CD.C.STB
CD.C.DATA
IC650 BUFF.
CN660
E-6925b
(CP660)
CP680 8P DIN
PLL CE/CLK/MOSI/MISO
RDS DATA/CLK
CLK,DATA
CPU IC601
MUTE Q660,661
AF MUTE
MUTE
AMP_CNT
PWR CNT
CD_ON_5V
BATT DET. Q709 Q710
BATT
5V (2)
ACC
RESET
RESET IC701
REM.IN
CD_CNT
POWER CONTROL Q705, 706
REG IC704
REG IC705
REG IC702
REG IC703
REG Q701
REG Q702
REG Q713
REG Q704
SW Q703
VDD 5V
5V (1)
PWR_8V
PWR_5V
P.9V
P.8V
BATT
E-9242
<Optical Pick-Up Ass'y>
CN101
RF AMP
TRACKING COIL
FOCUS COIL
LD+
SW Q101
LD
SERVO /DAC IC101
A - F, PD
T +/−, F+/−
Lch, Rch
CN401
CN620
RFOK,RST,A0,STB, SCK,SO,SI
CD.SI/CD.SO/CD.SCK/CD.STB
CD.A0/CD.RESET/CD.RFCK /CD.CLOCK/CD.LIMIT/CD.SW1 /CD.SW2
Limit SW
LIMIT SW
LOADING MOTOR
SL+/−
MOTOR DRIVER IC301
SW1, 2
CN302
SPINDLE MOTOR
SP+/−
CN402
Mode SW
CN601
RM DATA
PANEL_DET
LCD DI,CLK,CE
MUTE 5V
POWER LED
ILL 8V
CJ601
E-9243
I.R. IC902
LCD DRIVER IC901
LCD901
VDD 5V
SWITCH Q901
D930

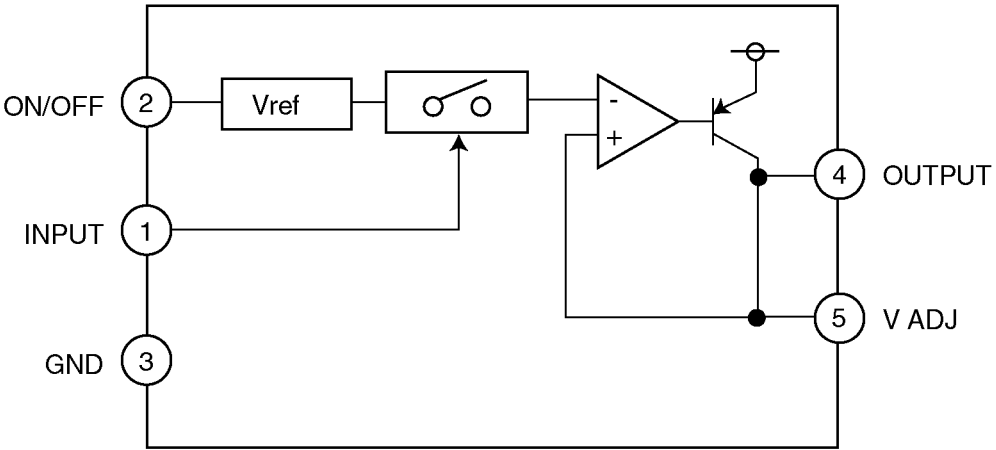
ON/OFF
2
Vref
INPUT
1
GND
3
-
+
4
OUTPUT
5
V ADJ

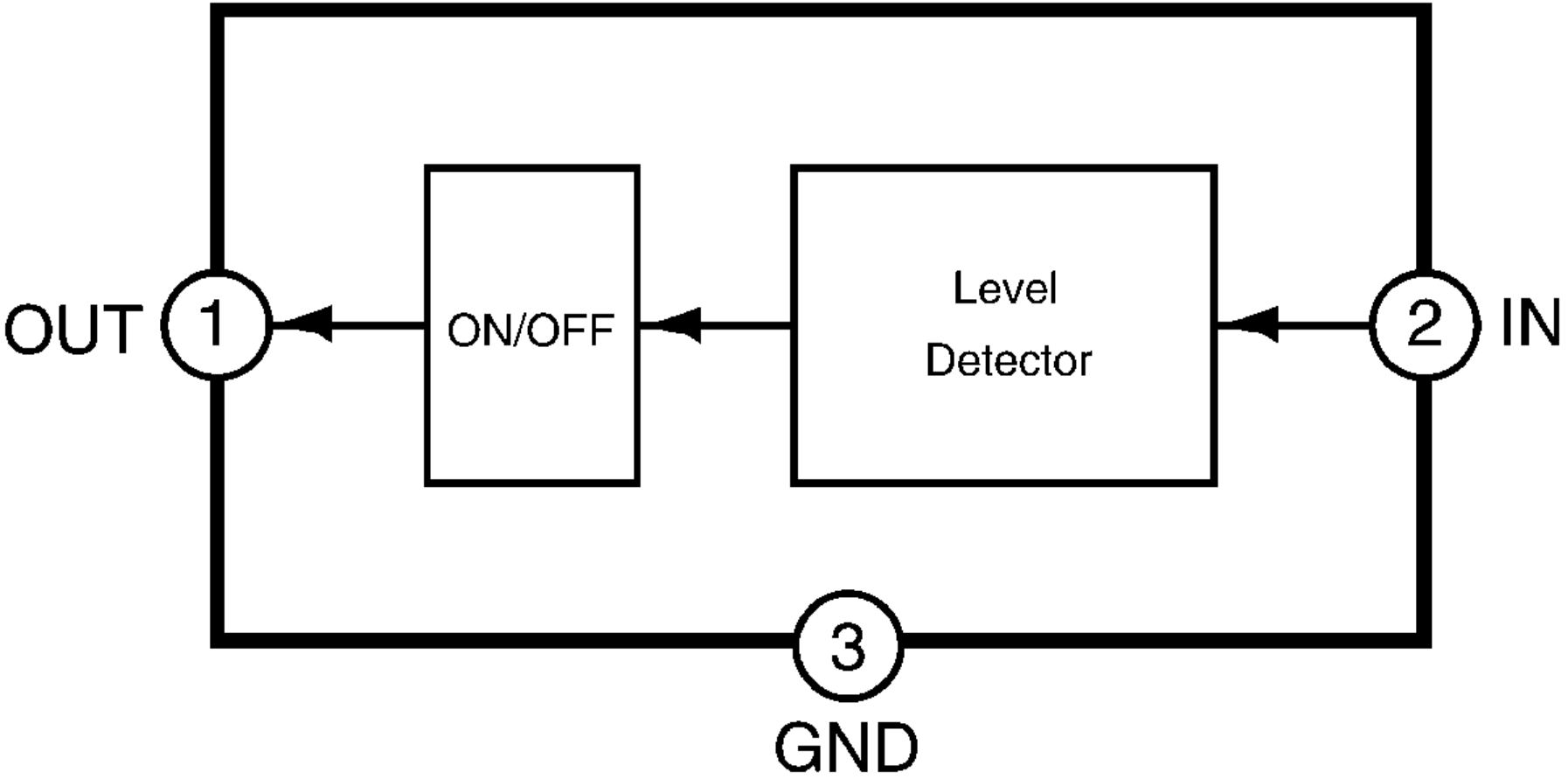
OUT
1
ON/OFF
Level
Detector
2
IN
3
GND

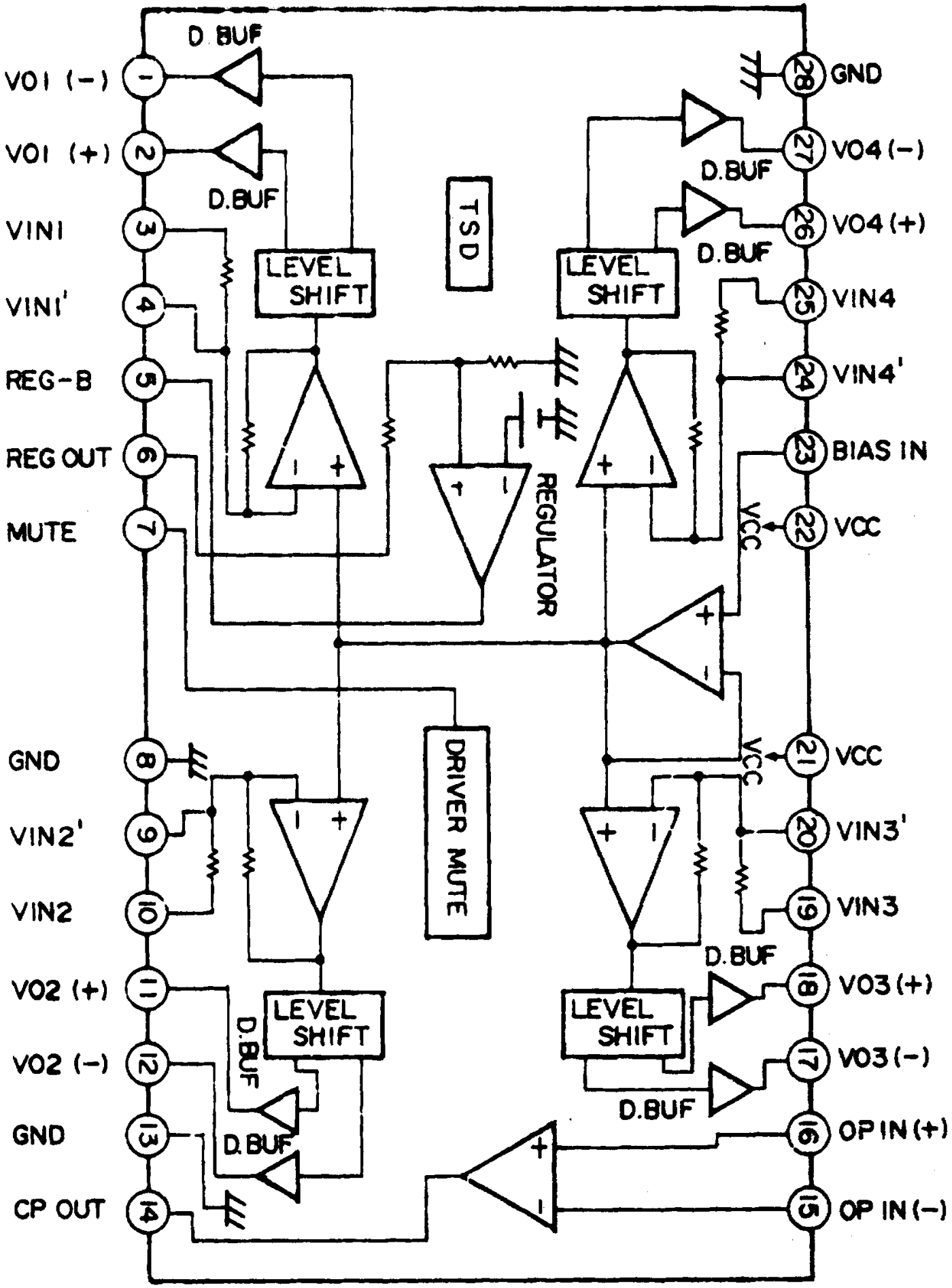
VO1 (−)
VO1 (+)
VIN1
VIN1'
REG-B
REG OUT
MUTE
GND
VIN2'
VIN2
VO2 (+)
VO2 (−)
GND
CP OUT
GND
VO4 (−)
VO4 (+)
VIN4
VIN4'
BIAS IN
VCC
VCC
VIN3'
VIN3
VO3 (+)
VO3 (−)
OP IN (+)
OP IN (−)
D. BUF
D.BUF
LEVEL SHIFT
TSD
REGULATOR
DRIVER MUTE

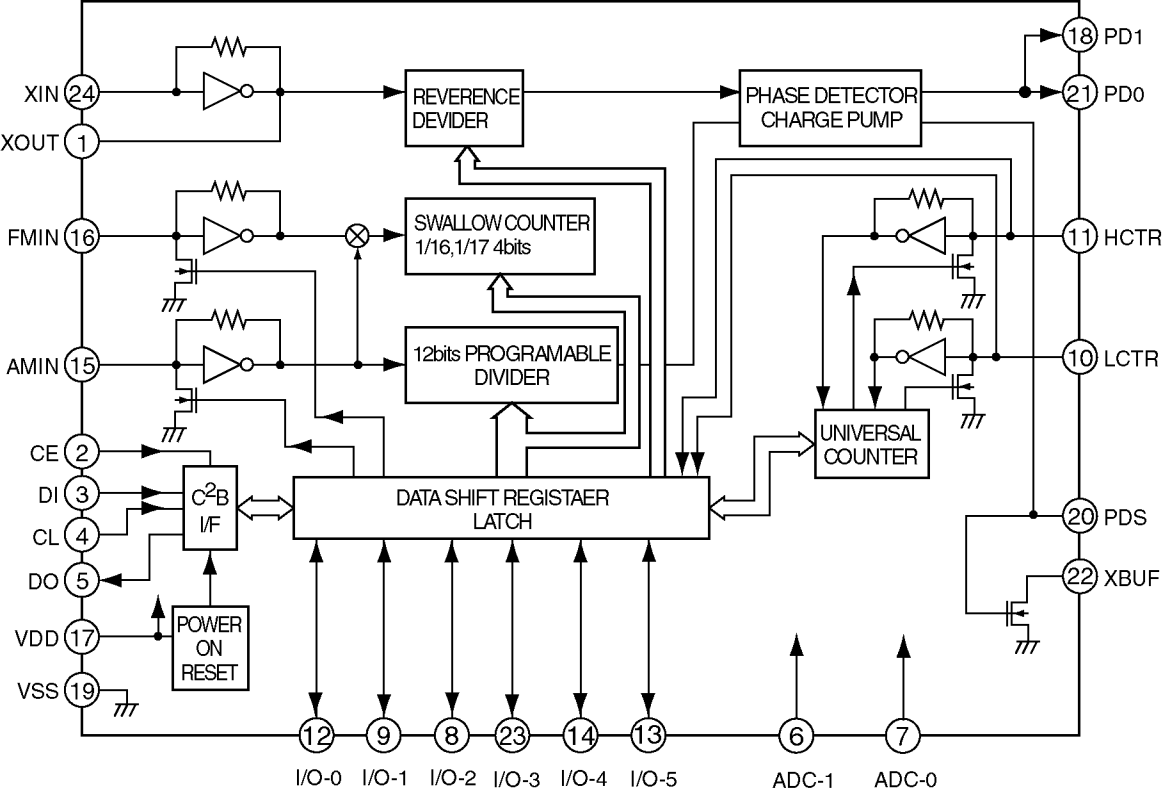
XIN 24
XOUT 1
FMIN 16
AMIN 15
CE 2
DI 3
CL 4
DO 5
VDD 17
VSS 19
REVERENCE DEVIDER
PHASE DETECTOR CHARGE PUMP
SWALLOW COUNTER 1/16,1/17 4bits
12bits PROGRAMABLE DIVIDER
UNIVERSAL COUNTER
C2B I/F
DATA SHIFT REGISTAER LATCH
POWER ON RESET
18 PD1
21 PD0
11 HCTR
10 LCTR
20 PDS
22 XBUF
12 I/O-0
9 I/O-1
8 I/O-2
23 I/O-3
14 I/O-4
13 I/O-5
6 ADC-1
7 ADC-0

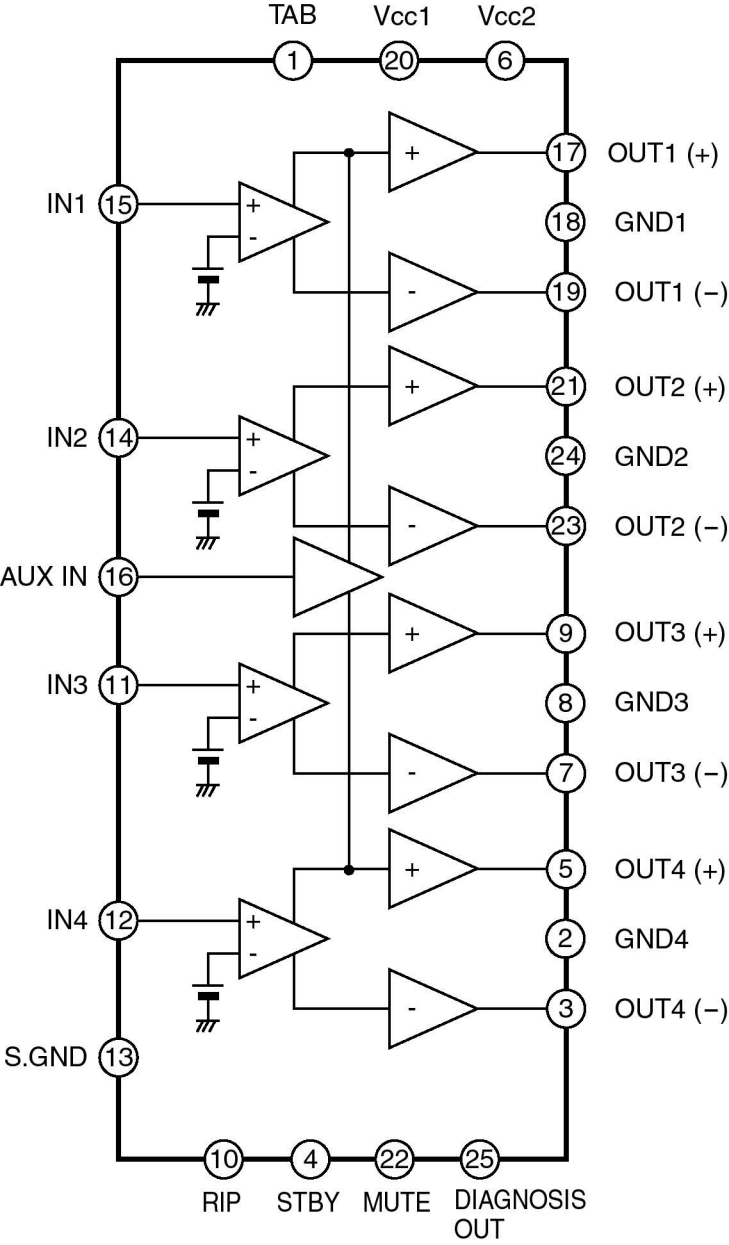
TAB
Vcc1
Vcc2
1
20
6
IN1
15
IN2
14
AUX IN
16
IN3
11
IN4
12
S.GND
13
17
OUT1 (+)
18
GND1
19
OUT1 (–)
21
OUT2 (+)
24
GND2
23
OUT2 (–)
9
OUT3 (+)
8
GND3
7
OUT3 (–)
5
OUT4 (+)
2
GND4
3
OUT4 (–)
10
RIP
4
STBY
22
MUTE
25
DIAGNOSIS OUT

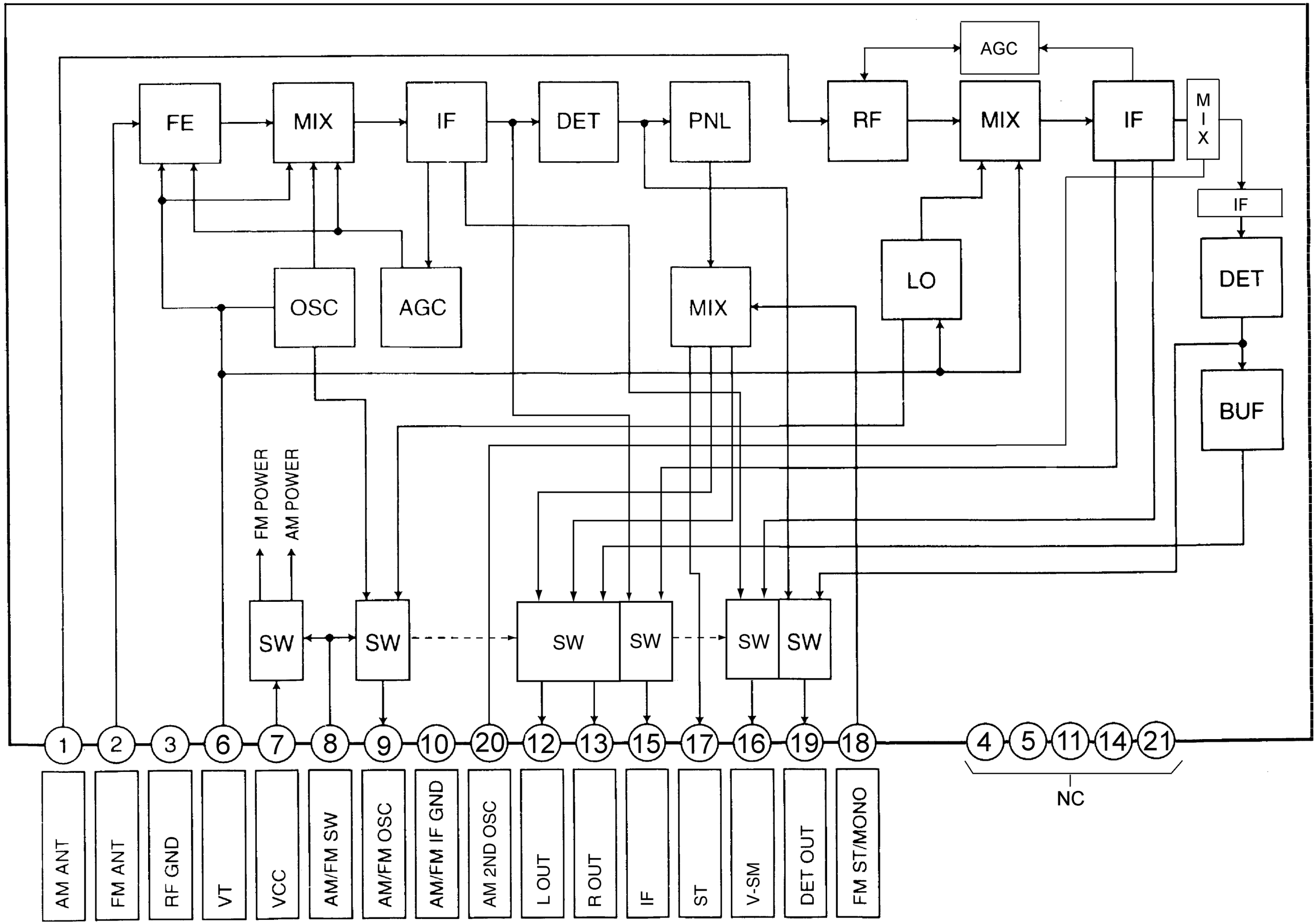
FE
MIX
IF
DET
PNL
RF
AGC
MIX
IF
M I X
IF
DET
BUF
OSC
AGC
MIX
LO
FM POWER
AM POWER
SW
SW
SW
SW
SW
SW
1
2
3
6
7
8
9
10
20
12
13
15
17
16
19
18
4
5
11
14
21
NC
AM ANT
FM ANT
RF GND
VT
VCC
AM/FM SW
AM/FM OSC
AM/FM IF GND
AM 2ND OSC
L OUT
R OUT
IF
ST
V-SM
DET OUT
FM ST/MONO

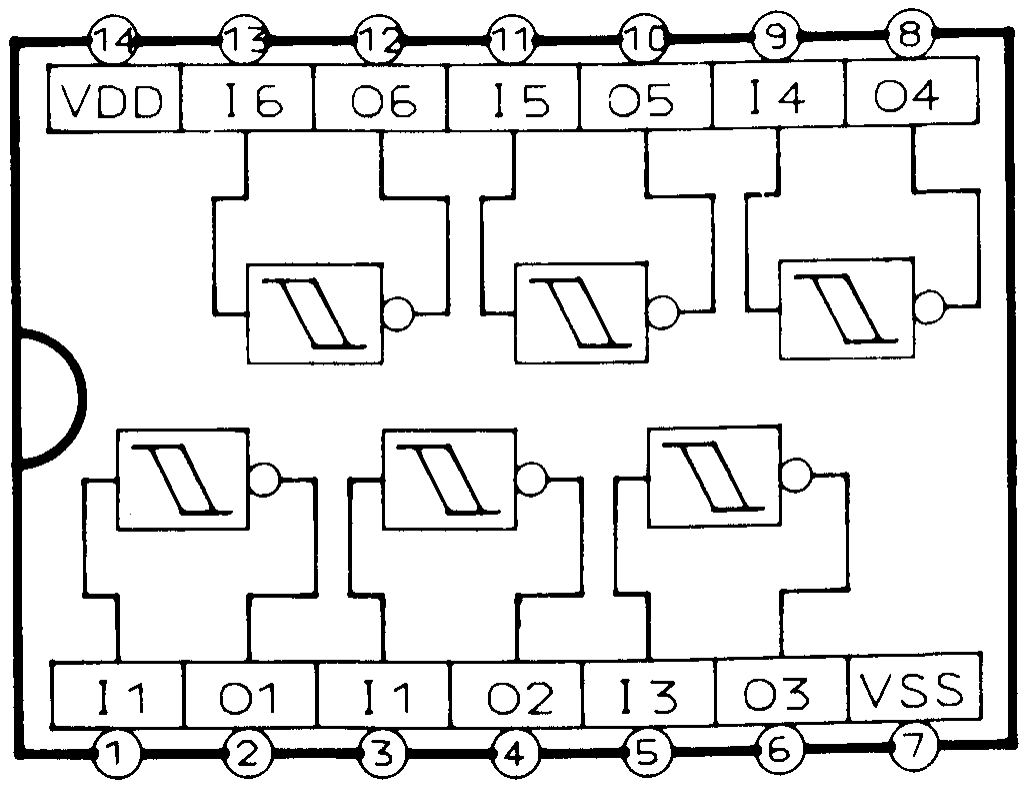
14
13
12
11
10
9
8
VDD
I6
O6
I5
O5
I4
O4
I1
O1
I1
O2
I3
O3
VSS
1
2
3
4
5
6
7

18.2. CD Servo Block

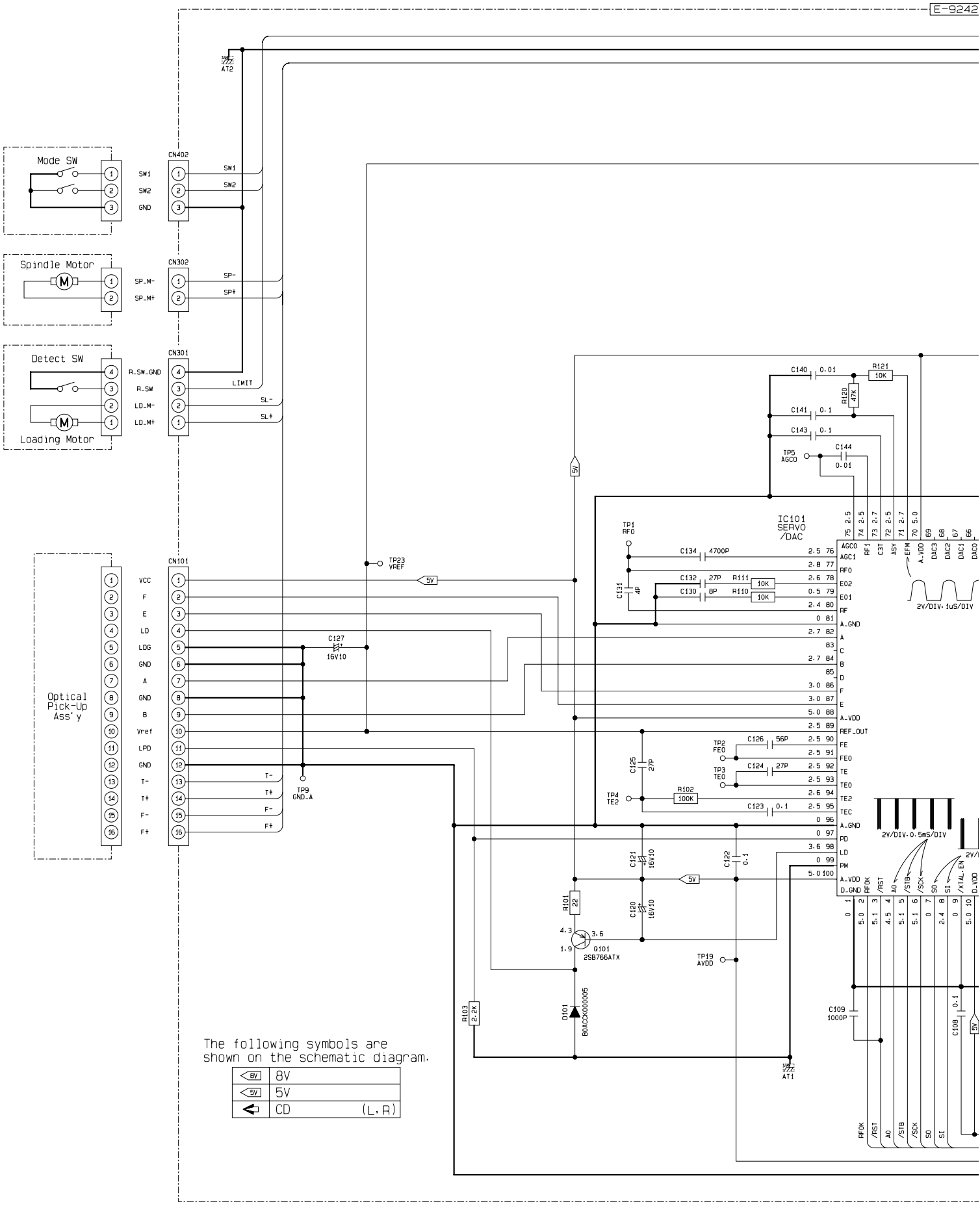

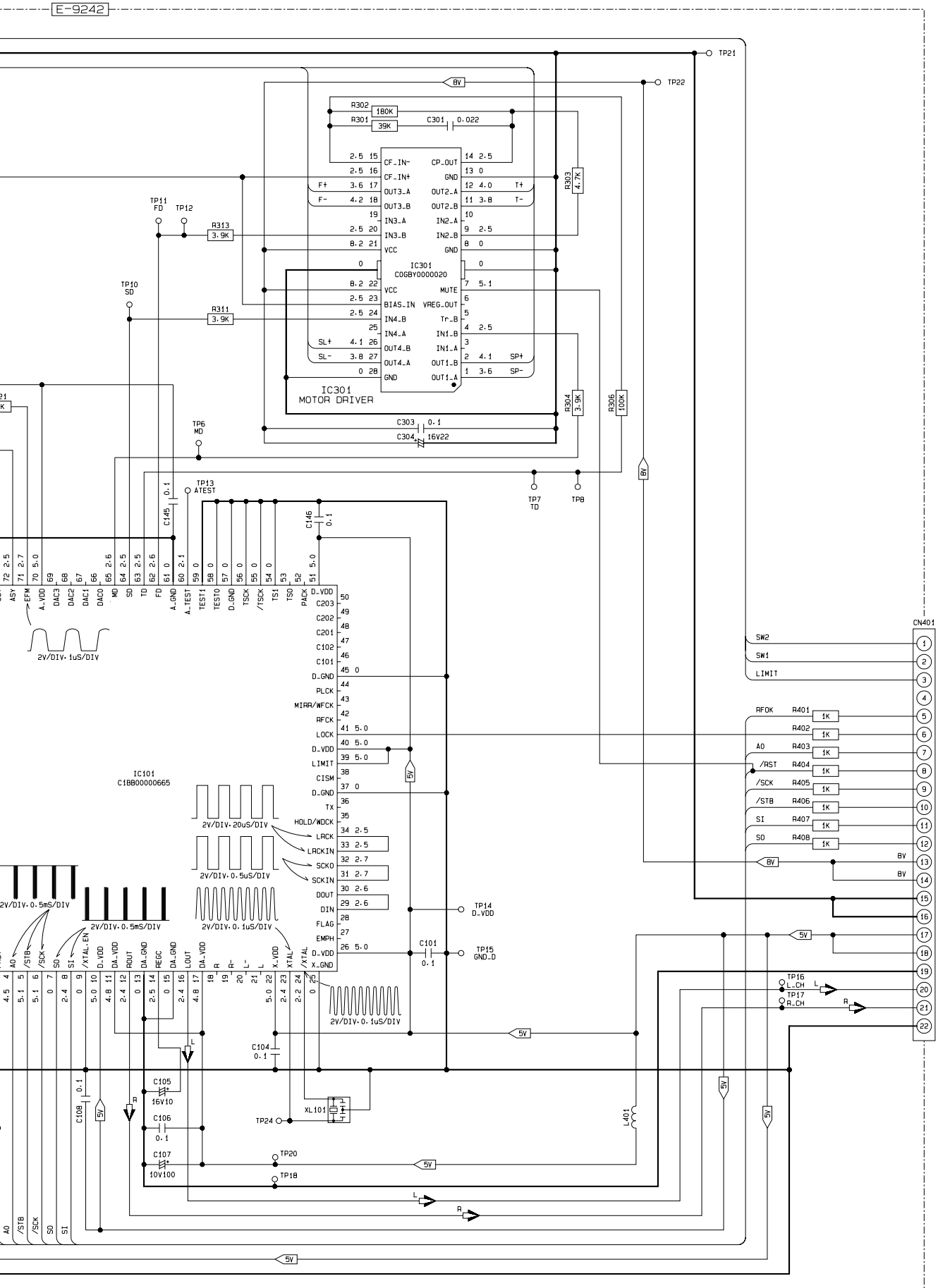

Printed in Japan (K) 2003.2 (Recycled Paper)

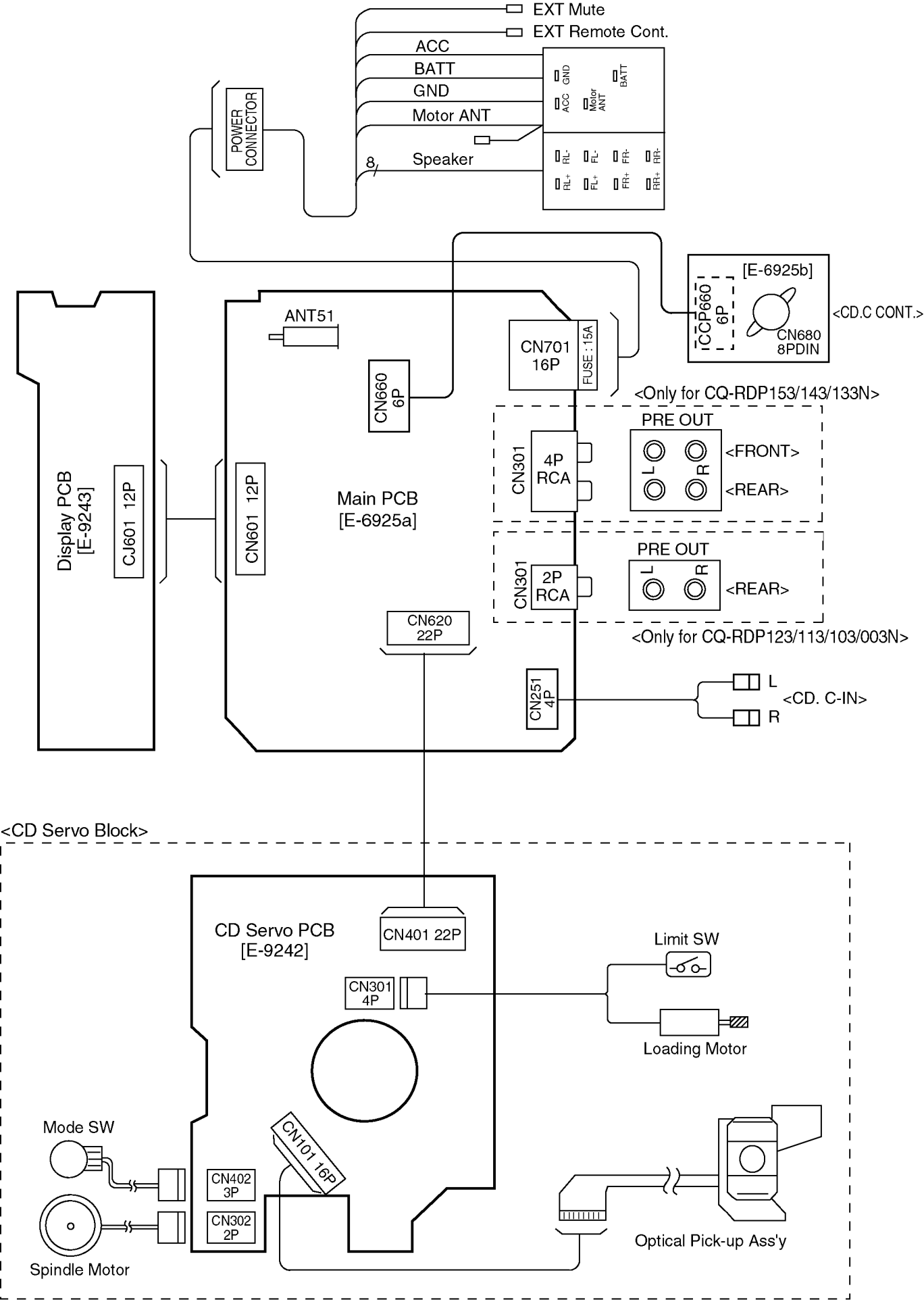
EXT Mute
EXT Remote Cont.
ACC
BATT
GND
Motor ANT
Speaker
8
POWER CONNECTOR
GND
ACC
Motor ANT
BATT
RL-
RL+
FL-
FL+
FR-
FR+
RR-
RR+
[E-6925b]
CCP660 6P
CN680 8PDIN
<CD.C CONT.>
ANT51
CN660 6P
CN701 16P
FUSE : 15A
<Only for CQ-RDP153/143/133N>
PRE OUT
CN301
4P RCA
L
R
<FRONT>
<REAR>
PRE OUT
CN301
2P RCA
L
R
<REAR>
<Only for CQ-RDP123/113/103/003N>
Display PCB [E-9243]
CJ601 12P
CN601 12P
Main PCB [E-6925a]
CN620 22P
CN251 4P
L
R
<CD. C-IN>
<CD Servo Block>
CD Servo PCB [E-9242]
CN401 22P
CN301 4P
Limit SW
Loading Motor
Mode SW
CN101 16P
CN402 3P
CN302 2P
Spindle Motor
Optical Pick-up Ass'y

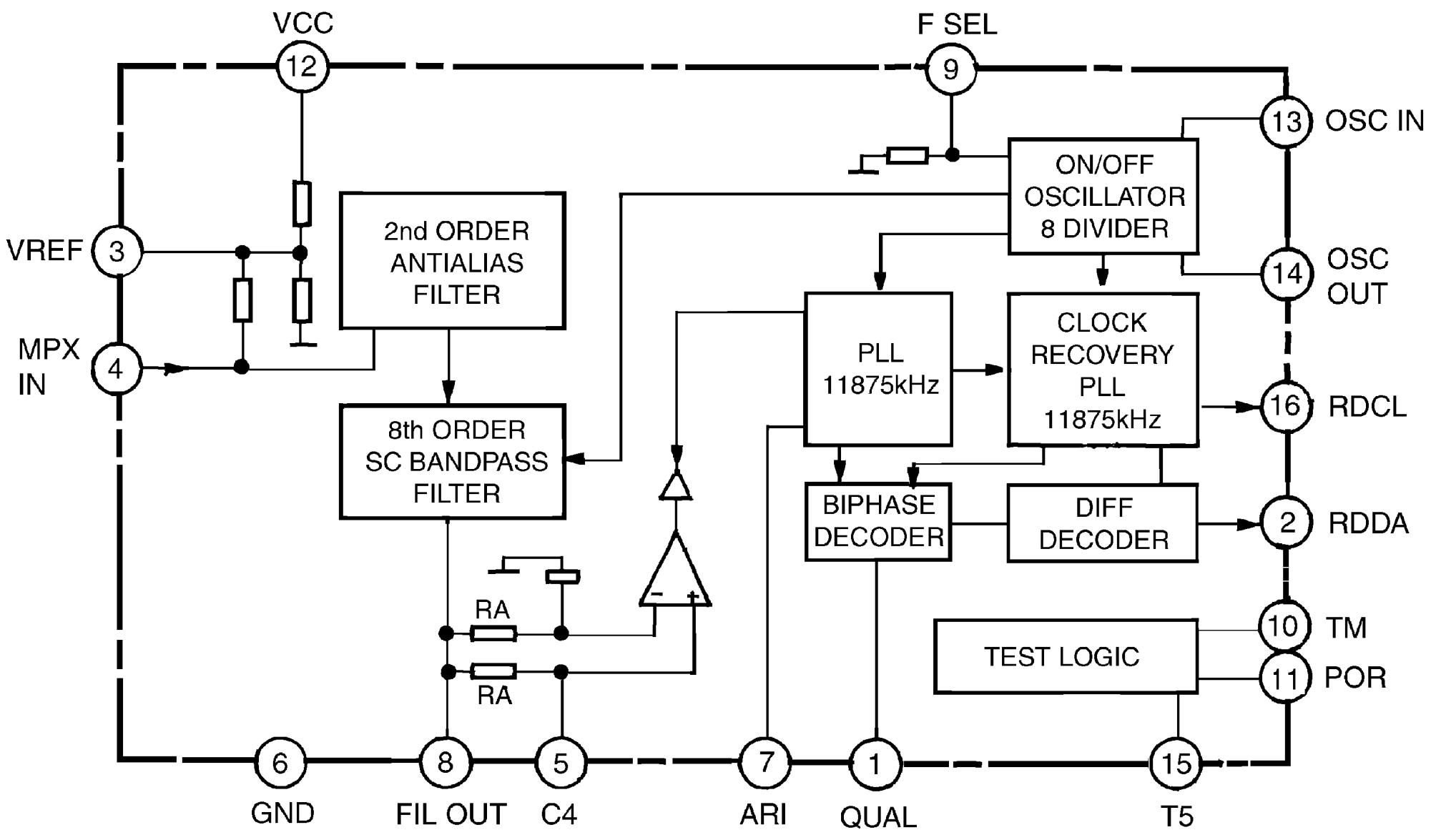
VCC
12
F SEL
9
13
OSC IN
ON/OFF
OSCILLATOR
8 DIVIDER
VREF
3
2nd ORDER
ANTIALIAS
FILTER
14
OSC
OUT
MPX
IN
4
PLL
11875kHz
CLOCK
RECOVERY
PLL
11875kHz
16
RDCL
8th ORDER
SC BANDPASS
FILTER
BIPHASE
DECODER
DIFF
DECODER
2
RDDA
RA
RA
TEST LOGIC
10
TM
11
POR
6
8
5
7
1
15
GND
FIL OUT
C4
ARI
QUAL
T5

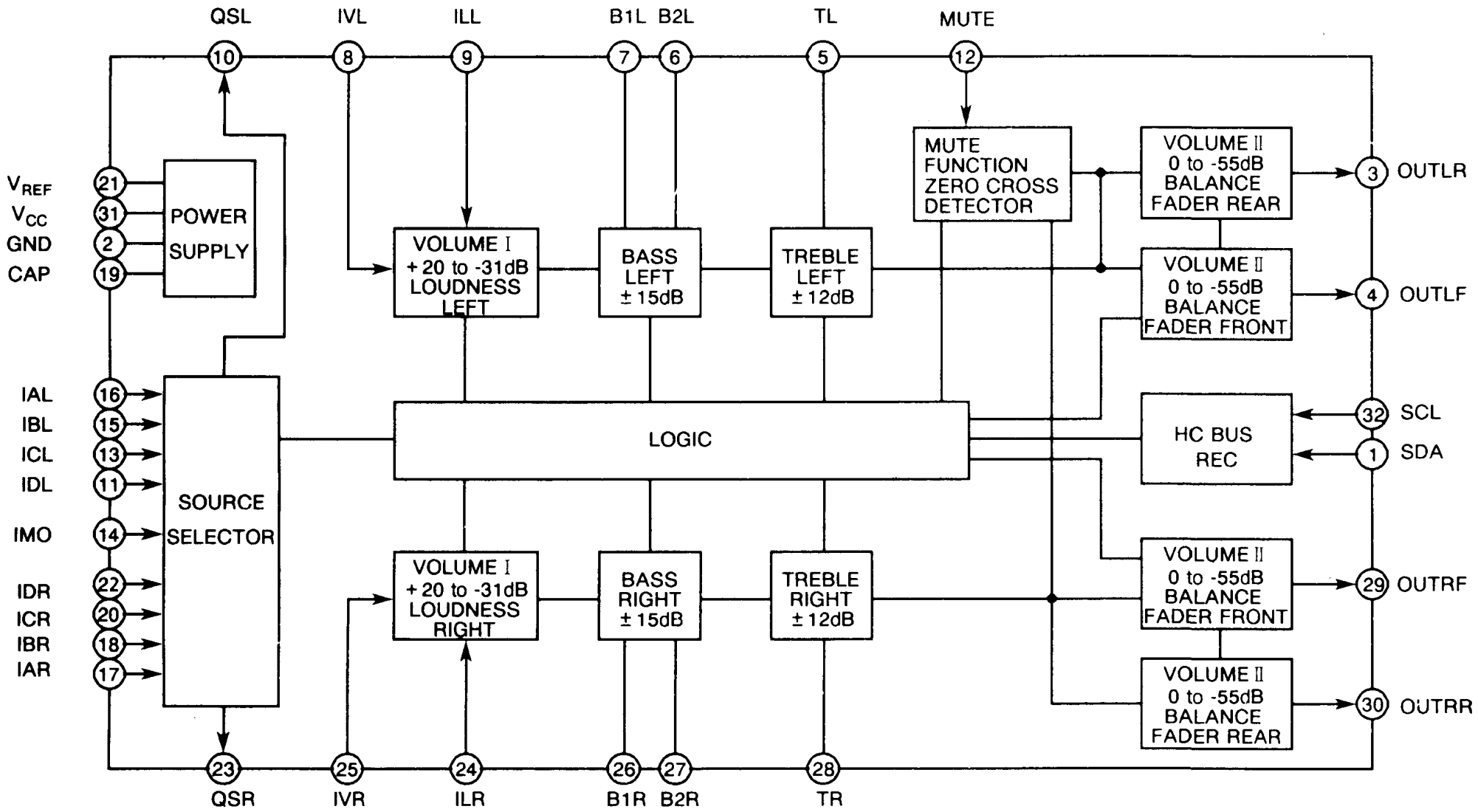
QSL
IVL
ILL
B1L
B2L
TL
MUTE
10
8
9
7
6
5
12
MUTE FUNCTION ZERO CROSS DETECTOR
VOLUME II 0 to -55dB BALANCE FADER REAR
3
OUTLR
VREF
VCC
GND
CAP
21
31
2
19
POWER SUPPLY
VOLUME I +20 to -31dB LOUDNESS LEFT
BASS LEFT ±15dB
TREBLE LEFT ±12dB
VOLUME II 0 to -55dB BALANCE FADER FRONT
4
OUTLF
IAL
IBL
ICL
IDL
IMO
IDR
ICR
IBR
IAR
16
15
13
11
14
22
20
18
17
SOURCE SELECTOR
LOGIC
HC BUS REC
32
SCL
1
SDA
VOLUME I +20 to -31dB LOUDNESS RIGHT
BASS RIGHT ±15dB
TREBLE RIGHT ±12dB
VOLUME II 0 to -55dB BALANCE FADER FRONT
29
OUTRF
VOLUME II 0 to -55dB BALANCE FADER REAR
30
OUTRR
23
25
24
26
27
28
QSR
IVR
ILR
B1R
B2R
TR

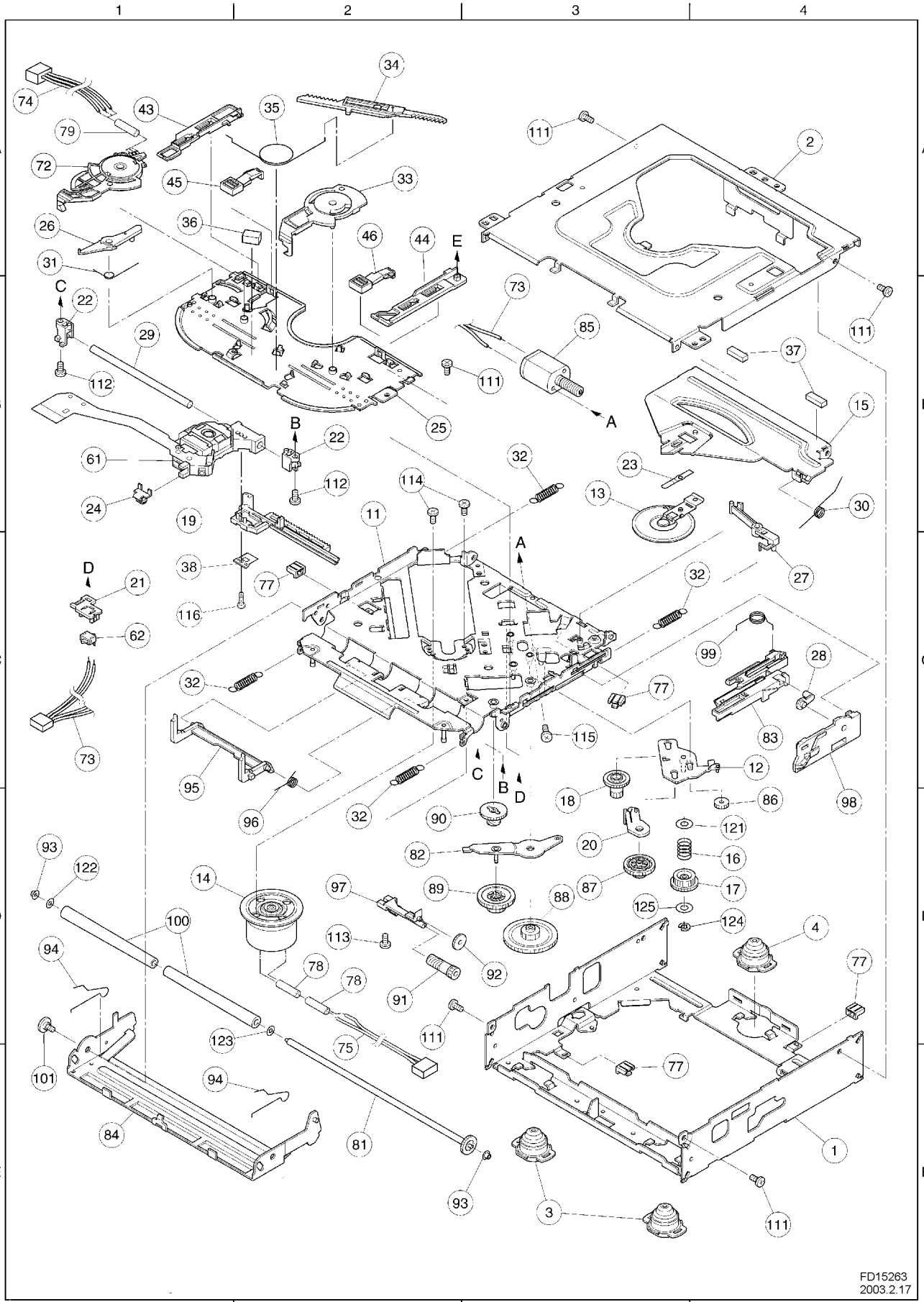
FD15263
2003.2.17

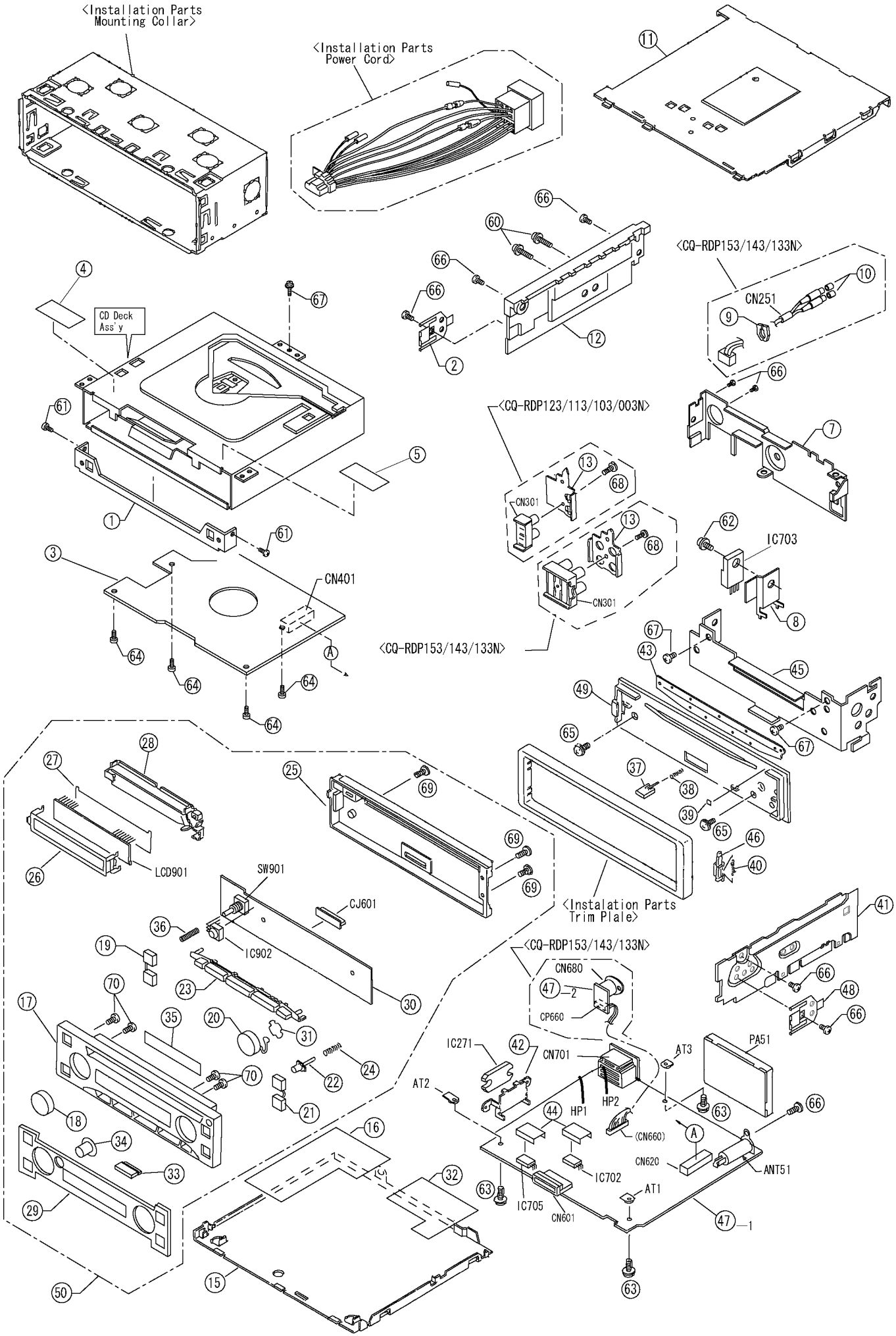
<Installation Parts Mounting Collar>
<Installation Parts Power Cord>
<CQ-RDP153/143/133N>
CN251
CD Deck Ass'y
<CQ-RDP123/113/103/003N>
CN301
CN401
IC703
LCD901
SW901
CJ601
IC902
<Instalation Parts Trim Plale>
CN680
CP660
IC271
CN701
HP1
HP2
(CN660)
CN620
IC702
IC705
CN601
AT1
AT2
AT3
PA51
ANT51
CQ-RDP153/143/133/123/113/103/003N

CAUTION:

This product utilizes a laser diode with the unit turned "on", laser radiation is emitted from the pickup lens.

Laser radiation from the pickup lens is safety level, but be sure the followings:

1. Do not disassemble the optical pickup unit, since radiation from exposed laser diode is dangerous.
2. Do not adjust the variable resistor on the pickup unit. It was already adjusted.
3. Do not look at the focus lens using optical instruments.
4. Recommend not to look at pickup lens for a long time.

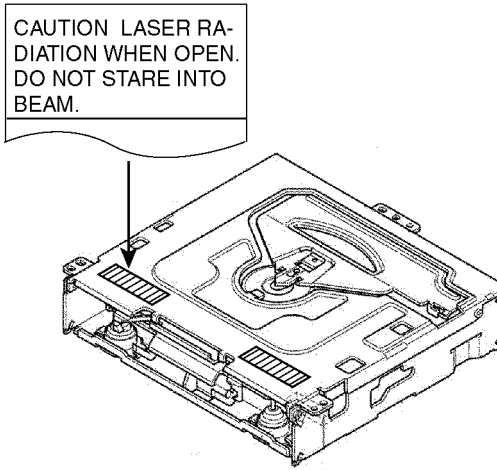

Deck Ass'y (Upper Side)

Caution

This Product utilizes a laser.

Use of controls or adjustments or performance of procedures other than those specified herein may result in hazardous radiation exposure.

18 SCHEMATIC DIAGRAM -2

18.1. Main Block

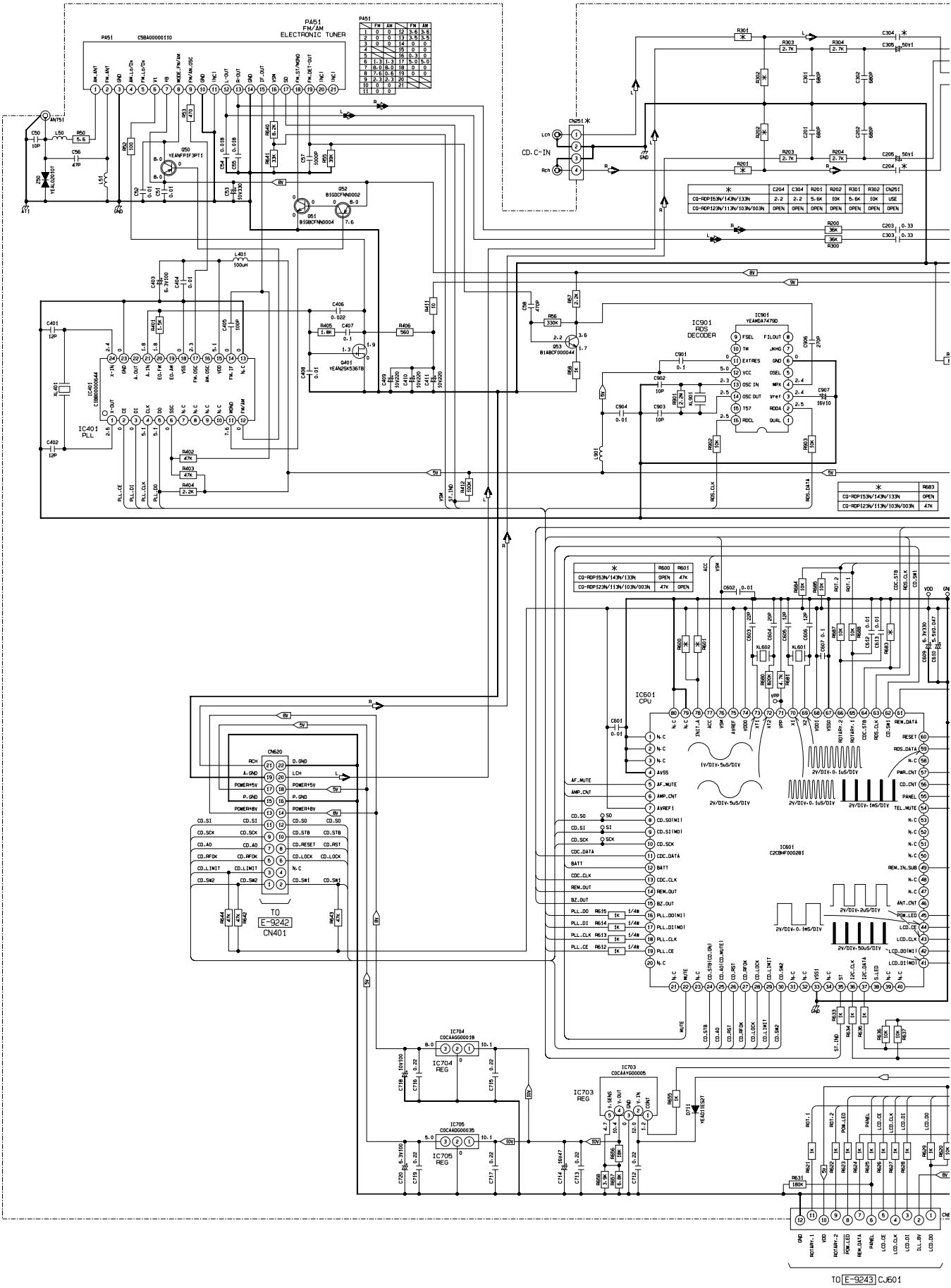

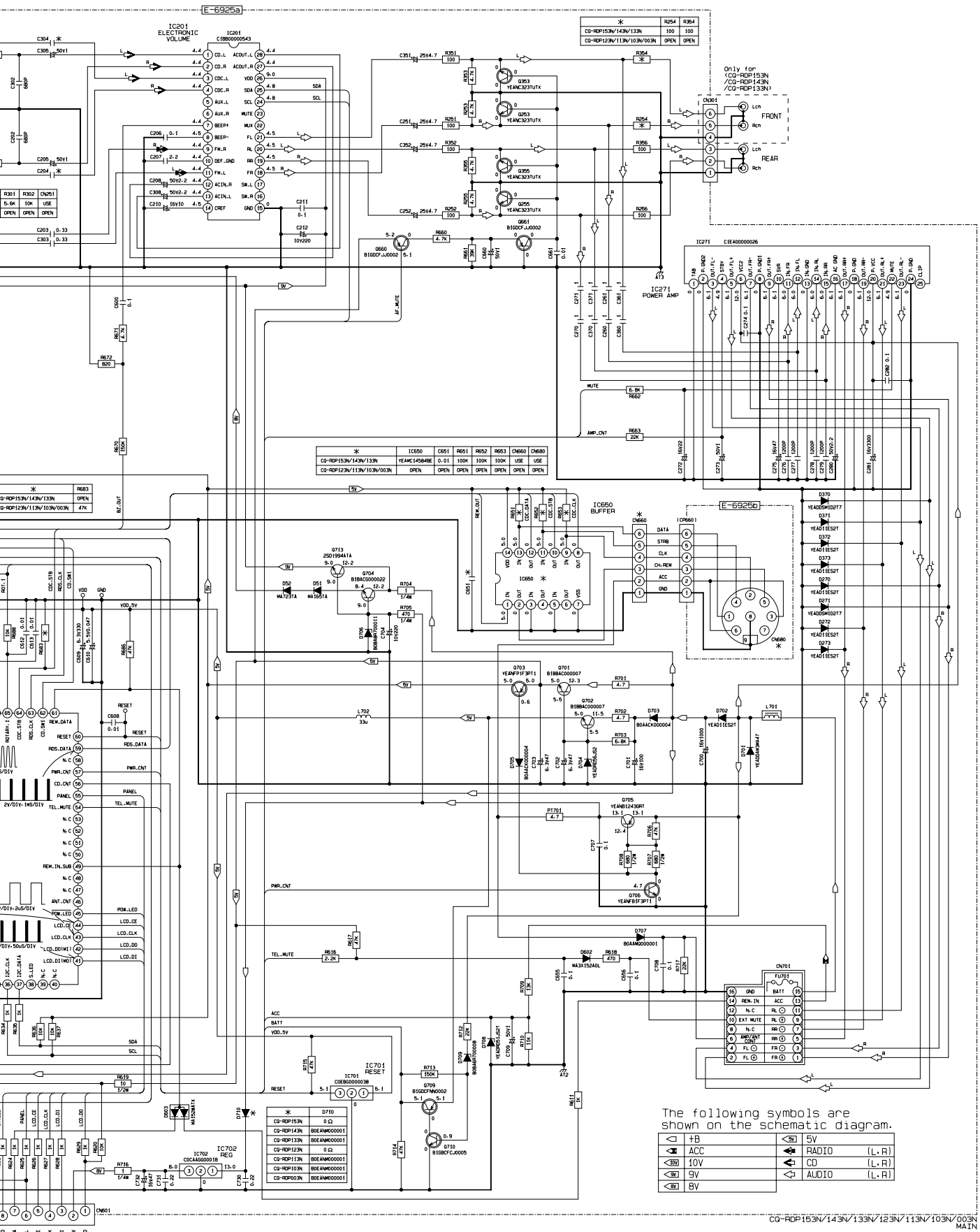
E-6925a
IC201 ELECTRONIC VOLUME
IC271 POWER AMP
IC650 BUFFER
E-6925b
IC701 RESET
IC702 REG
Only for (CQ-RDP153N /CQ-RDP143N /CQ-RDP133N)
FRONT
REAR
CN601
CN701
CN660
CN680
The following symbols are shown on the schematic diagram.
+B
ACC
10V
9V
8V
5V
RADIO (L.R)
CD (L.R)
AUDIO (L.R)
CQ-RDP153N/143N/133N/123N/113N/103N/003N MAIN

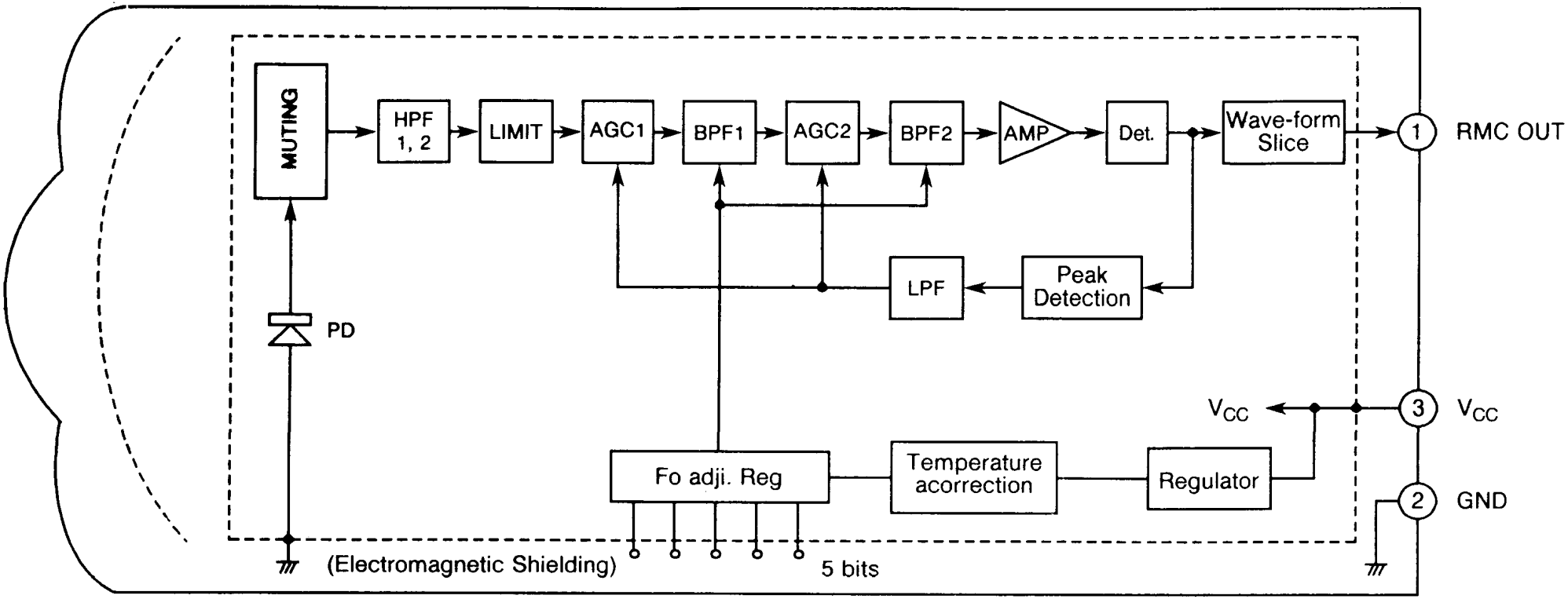
MUTING
HPF 1, 2
LIMIT
AGC1
BPF1
AGC2
BPF2
AMP
Det.
Wave-form Slice
1
RMC OUT
LPF
Peak Detection
PD
VCC
3
VCC
Fo adji. Reg
Temperature acorrection
Regulator
2
GND
(Electromagnetic Shielding)
5 bits

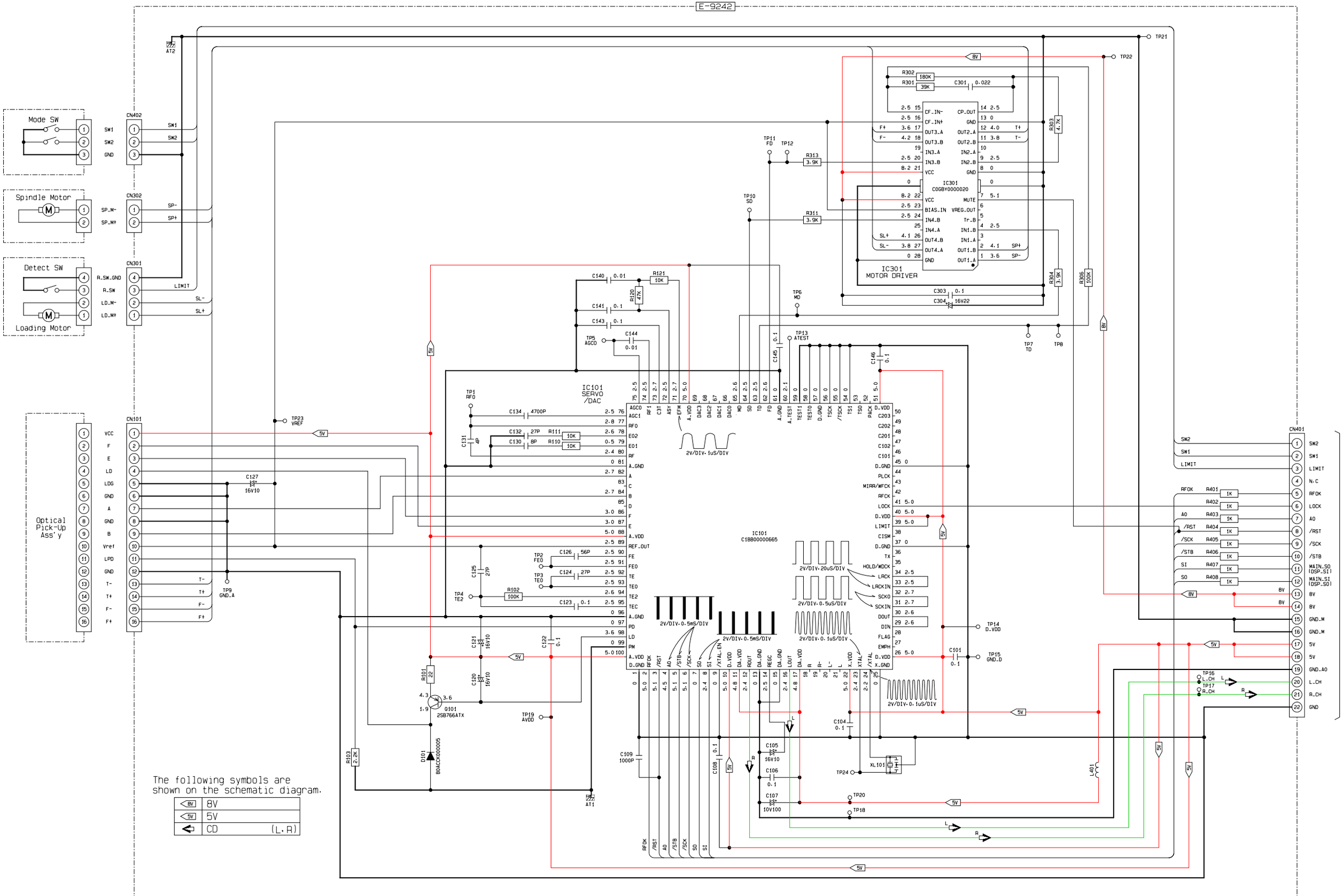
E-9242
Mode SW
Spindle Motor
Detect SW
Loading Motor
Optical Pick-Up Ass'y
IC301 MOTOR DRIVER
IC301 C0GBY0000020
IC101 SERVO /DAC
IC101 C1BB00000665
Q101 2SB766ATX
D101 B0ACCK000005
XL101
L401
TO E-6925a CN620
The following symbols are shown on the schematic diagram.
8V
5V
CD (L.R)

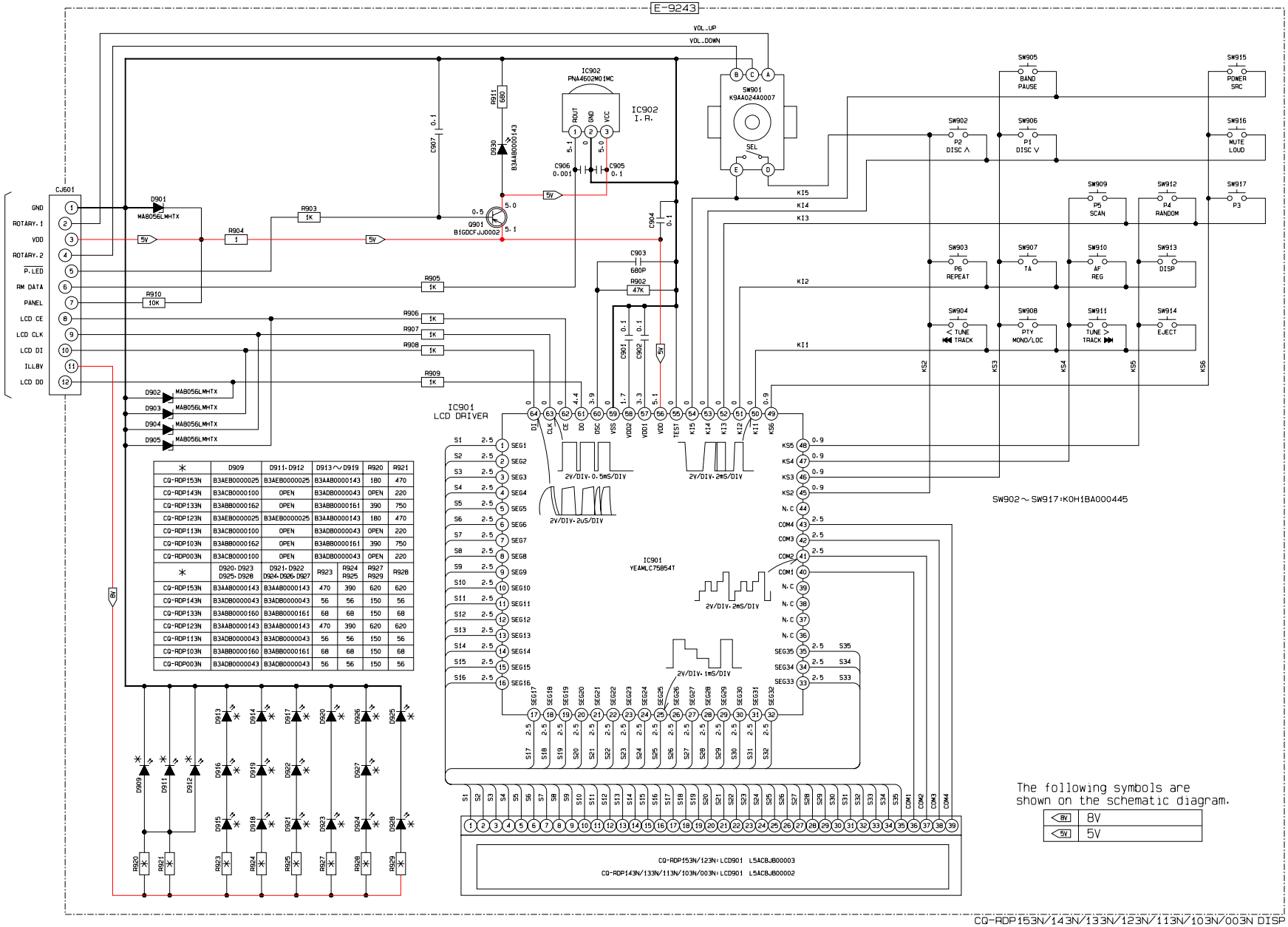

＊	D909	D911・D912	D913～D919	R920	R921
CQ-RDP153N	B3AEB0000025	B3AEB0000025	B3AAB0000143	180	470
CQ-RDP143N	B3ACB0000100	OPEN	B3ADB0000043	OPEN	220
CQ-RDP133N	B3ABB0000162	OPEN	B3ABB0000161	390	750
CQ-RDP123N	B3AEB0000025	B3AEB0000025	B3AAB0000143	180	470
CQ-RDP113N	B3ACB0000100	OPEN	B3ADB0000043	OPEN	220
CQ-RDP103N	B3ABB0000162	OPEN	B3ABB0000161	390	750
CQ-RDP003N	B3ACB0000100	OPEN	B3ADB0000043	OPEN	220

＊	D920・D923 D925・D928	D921・D922 D924・D926・D927	R923	R924 R925	R927 R929	R928
CQ-RDP153N	B3AAB0000143	B3AAB0000143	470	390	620	620
CQ-RDP143N	B3ADB0000043	B3ADB0000043	56	56	150	56
CQ-RDP133N	B3ABB0000160	B3ABB0000161	68	68	150	68
CQ-RDP123N	B3AAB0000143	B3AAB0000143	470	390	620	620
CQ-RDP113N	B3ADB0000043	B3ADB0000043	56	56	150	56
CQ-RDP103N	B3ABB0000160	B3ABB0000161	68	68	150	68
CQ-RDP003N	B3ADB0000043	B3ADB0000043	56	56	150	56

The following symbols are shown on the schematic diagram.

<8V	8V
<5V	5V

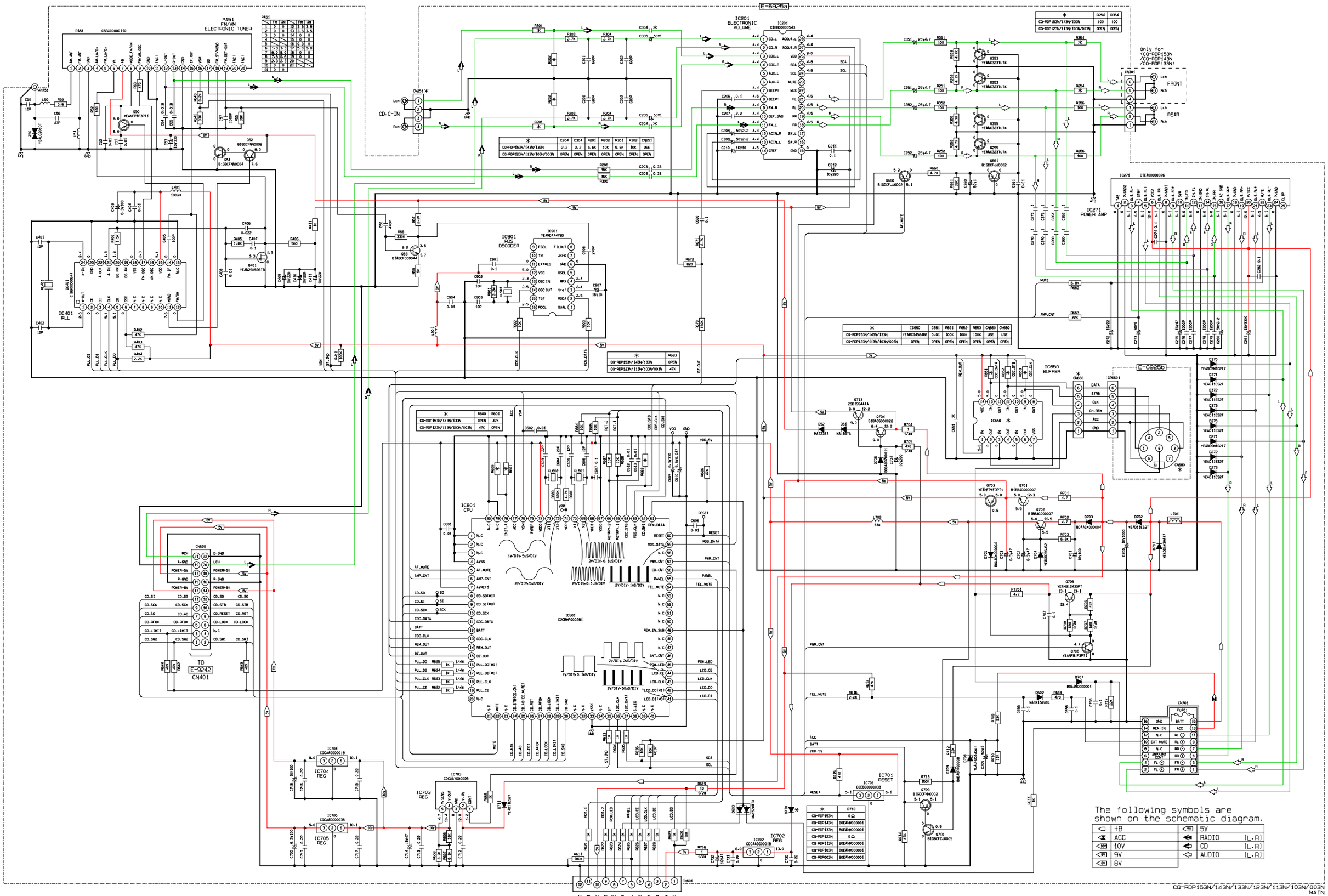

CQ-RDP153N/143N/133N/123N/113N/103N/003N
MAIN

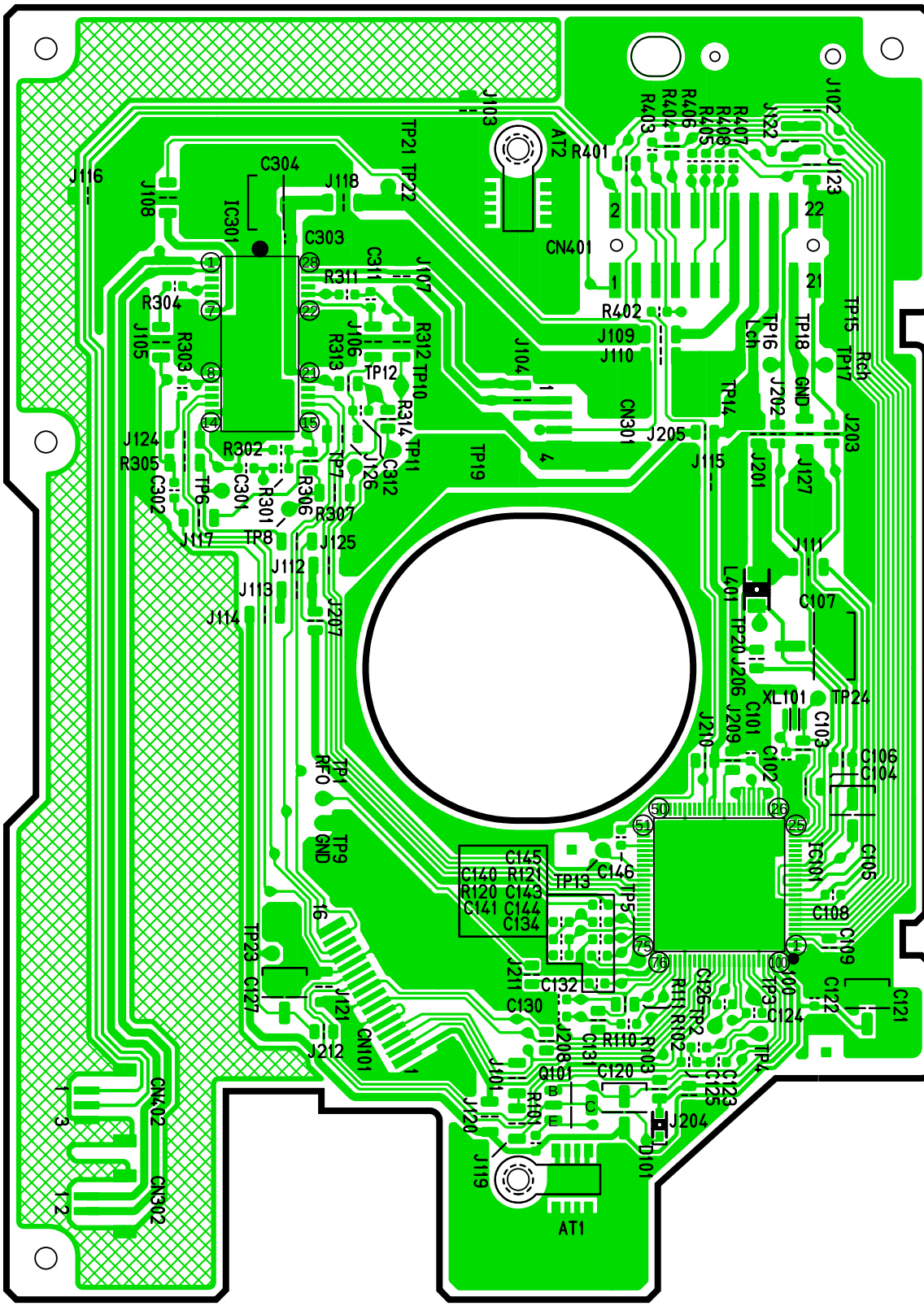

[E-9242] [Top View]

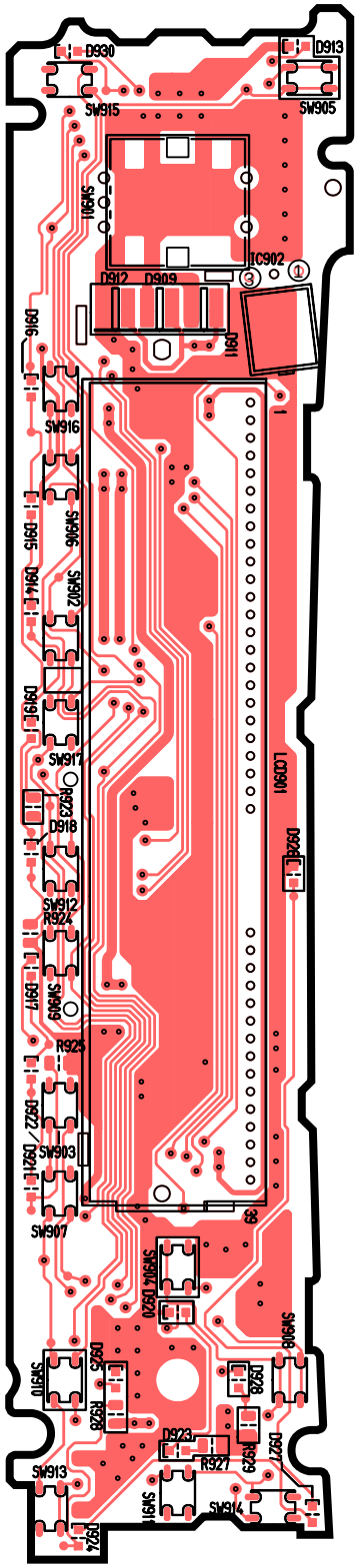

[E-9243] [Top View]

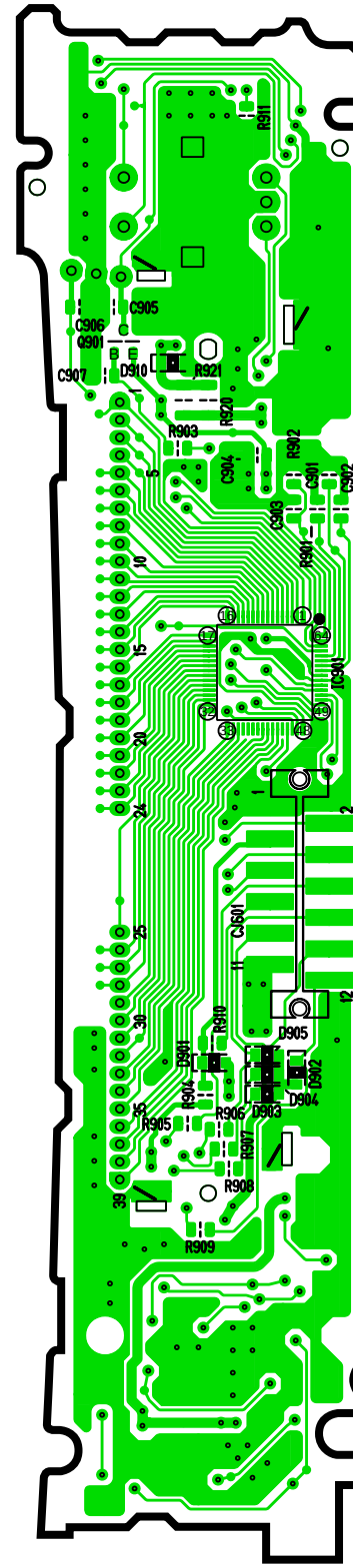

[E-9243] [Bottom View]

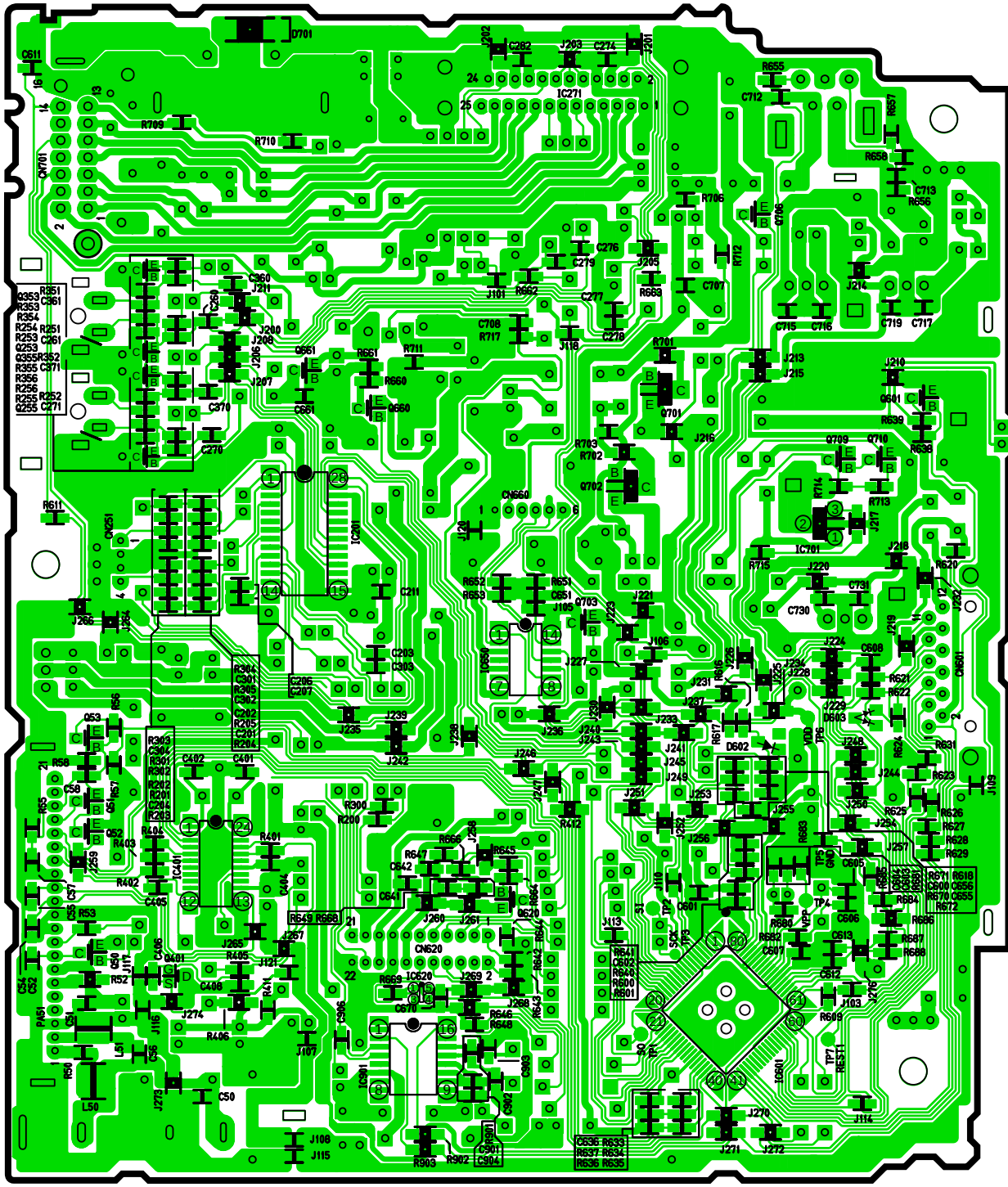

[E-6925a] [Bottom View]

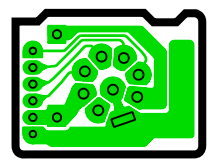

[E-6925b]
[Bottom View]

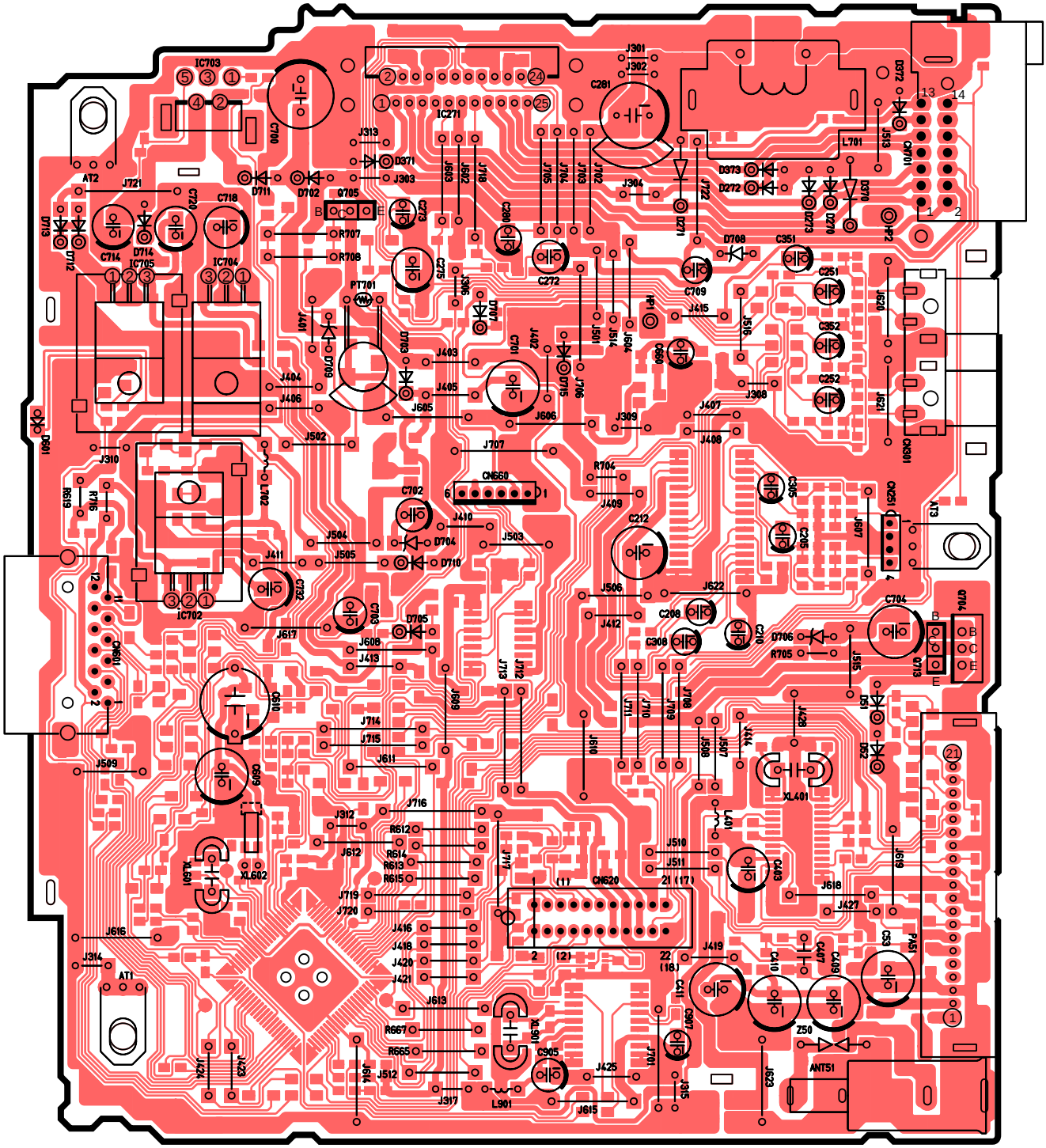
IC703
IC704
IC705
IC702
IC271
IC701
C700
C720
C718
C714
C281
C272
C351
C251
C352
C252
C709
C702
C212
C305
C306
C208
C209
C704
C410
C411
C407
C409
C907
C905
C901
C690
C610
C609
C603
C601
C701
C722
C723
C724
C725
C726
C727
C728
C729
C730
C731
C732
C733
C734
C735
C736
C737
C738
C739
C740
C741
C742
C743
C744
C745
C746
C747
C748
C749
C750
C751
C752
C753
C754
C755
C756
C757
C758
C759
C760
C761