The pick-up heads are of the plug-in type with plug and socket connections at the back of the head.

To remove pick-up head.—Unscrew the pick-up fixing screw, withdraw the pick-up, easing the pick-up lead under the arm, and remove the two plug connections from back of pick-up.

If reproduction ceases, or becomes distorted when fitted with a "Garrard" standard magnetic pick-up, first make sure that the amplifier is in order. Should this be found satisfactory, a slight adjustment to the pick-up may be necessary or the damping rubber may need renewing.

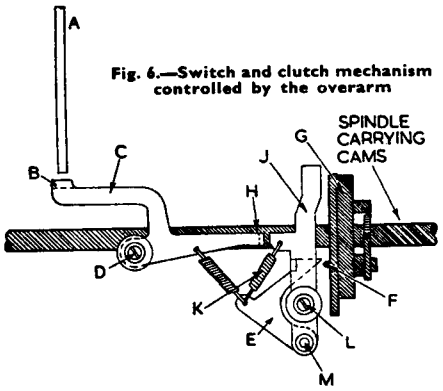

Fig. 6.—Switch and clutch mechanism controlled by the overarm

Fig. 6—Switch and clutch mechanism controlled by the overarm.

To examine pick-up proceed as follows: Remove the pick-up cover, and by viewing the front of the pick-up, examine armature to see that it is in the centre of the gap between the pole pieces.

If it is touching one of the pole pieces it must be re-centred. To do this, loosen the two screws holding the adjusting plate, slide the latter until the armature is in the centre, then tighten the screws.

If the armature will not retain its centre position, it will be necessary to renew the damping rubber. This can be done by removing the adjusting plate, replacing the rubber and re-assembling the plate. Adjust the plate until armature is centred before tightening the screws.

The top damping rubber tends to perish in time. It should, therefore, be replaced whenever it appears that the needle stiffness has increased, otherwise excessive record wear may occur.

Distortion can be caused by dirt or foreign matter in the gap between the pole pieces. To remedy, remove the adjusting plate and damping rubber and clean gap.

The pick-up coil winding can be checked for continuity with an ohmmeter.

If a crystal or high-fidelity pick-up is suspect, the pick-up head should be returned for examination. A continuity test cannot be carried out on crystal pick-ups with an ohmmeter. Crystal cartridges and high-fidelity pick-ups must not be opened or the manufacturers will disclaim responsibility.

MOTOR MAINTENANCE.

If the motor fails to start when the control knob is turned to "start," first check the power supply and ascertain if current is reaching the motor terminals. Next examine the terminal block and see that the leads and screws are tight; also examine the switch contacts, clean and adjust if necessary.

The motor requires occasional lubrication, depending, of course, on how often the changer is used. Lift off turntable and insert a few drops of Garrard or thin lubricating oil in oil holes (Fig. 2).

If a thick oil has been used to lubricate the bearings the motor will appear weak or will not start. The motor will have to be dismantled and all traces of the heavy oil removed. Should motor run hot, check that voltage changeover links are set according to the voltage of the mains supply in use. Wavy reproduction from records is usually due to dry governor pads. These should be lubricated by saturating the felt pads with oil. To cure governor rattle, put a little thick oil on the shaft where the governor sleeve slides.

RC60/D16.—This is an induction motor designed to work on 40-60 c/s AC mains of 100-130 and 200-250 volts.

To check motor windings insert a meter in either motor lead. The maximum current consumption should not exceed 0.11A on 200-250V, 0.22A on 100-130V or 0.24A on 110V 60 c/s.

If readings in excess of these are obtained, then the motor unit should be returned to manufacturers for examination.

RC60/U16.—This is a universal motor to work on 100-130V, 200-250V DC and 25-60 c/s AC.

Periodical examination of the carbon brushes should be made. If they are allowed to become dirty or worn, brush noise will occur. The brushes can be cleaned by lightly scraping the contact surface with a penknife. It is essential that the brushes be returned to their original holders and the same way round as previously. New brushes are 9/16-in. long under the springs. When worn to ⅜-in. they should be replaced.

To remove motor.—Disconnect switch leads from the switch and remove clips holding the leads. Then remove motor fixing bolts and withdraw motor.

CHANGER UNIT SPARES.

Part No.	Description
A45380	Record spindle assembly.
A41531	Record spindle spring assembly
A45213	Platform cam assembly
A45221	Camshaft bearing
A45241	Pick-up arm lever unit.
A45245	Eccentric pin (180, Fig. 5)
B45148	Platform bracket
B45115	Overarm bracket.
C45256	Base casting
C45390	Turntable (covered)
A45376	Striker assembly (41, Fig. 3)
A41513	Friction spring (Auto trip)
A45179	Rubber bush for trip lever.
A40048	Needle fixing screw
A40019	Pick-up arm pivot screw
A40020	Locking screw for pivot screw A40019

D16 AND H16 MOTOR SPARES.

Part No.	Description
A41520	Governor spring
A45347	Armature end bearing plate assembly
A45348	Turntable spindle assembly
B45346	End cover casting
C45314	Motor frame
A47445	Armature bearing
A43205	Armature bearing thrust ball.
A45350	Armature bearing plunger.
A41517	Spring for plunger A45350
A45349	Armature bearing bush
A40521	Thrust washer for turntable spindle bearing
A43203	Thrust ball for turntable spindle bearing
A45326	Screwed plug (turntable spindle)