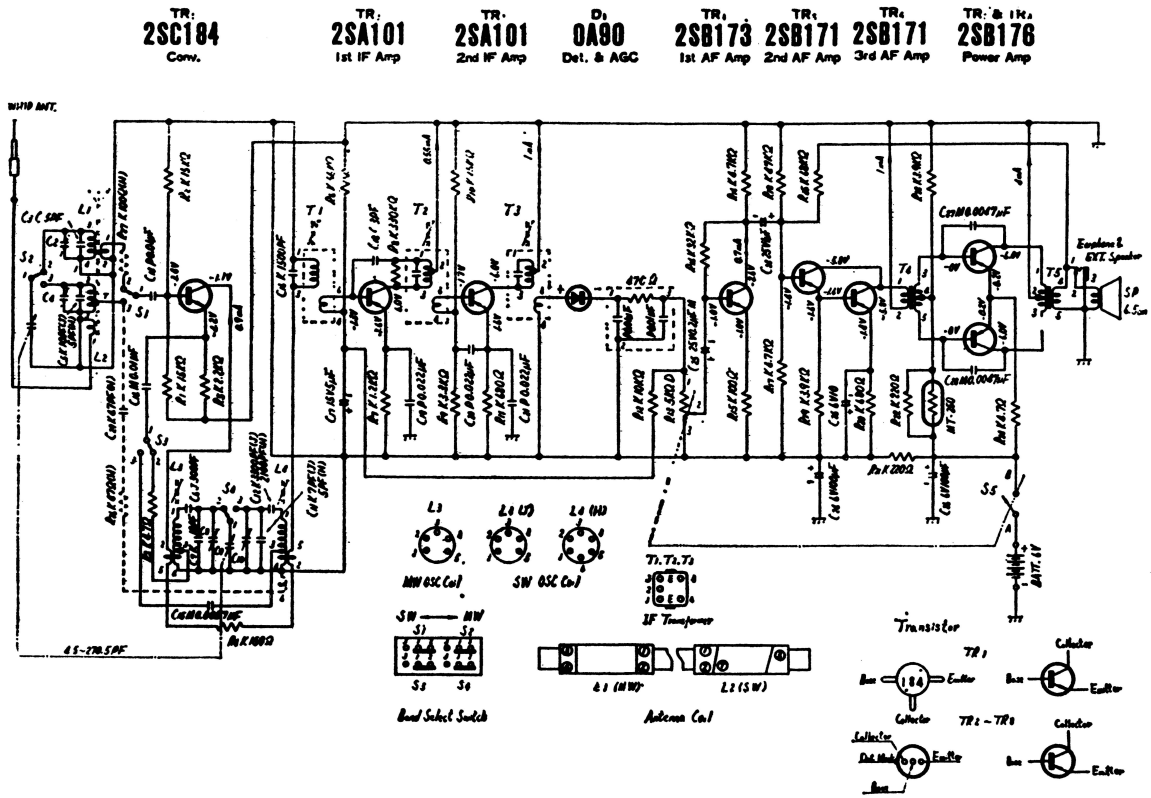

Notes:

1. $S_1 \sim S_4$: Band selector switch in "MW" position.
2. S_5 : Power source switch in "OFF" position.
3. DC Voltage measurements are taken with circuit tester (10KΩ/V).
4. Measured voltages for $TR_1 \sim TR_8$ are from transistor terminal to positive terminal of battery.
5. Capital letters (M, K, J, P, C, D) in the circuit diagram show allowable tolerances of resistors and capacitors as follows:

   M=±20% K=±10% J=±5% P=+100% − 0% C=±0.25PF D=±0.5PF

6. Battery current: No signal.....20mA
   Maximum Output 110mA
7. PF=pico farad=mmf
   μF=micro farad=MF
8. Schematic diagram shows both of Models R-210H and R-210J. Model R-210 H is different from Model R-210 J, and difference of Model R-210 H is shown in botted line.

NATIONAL R-210H or J

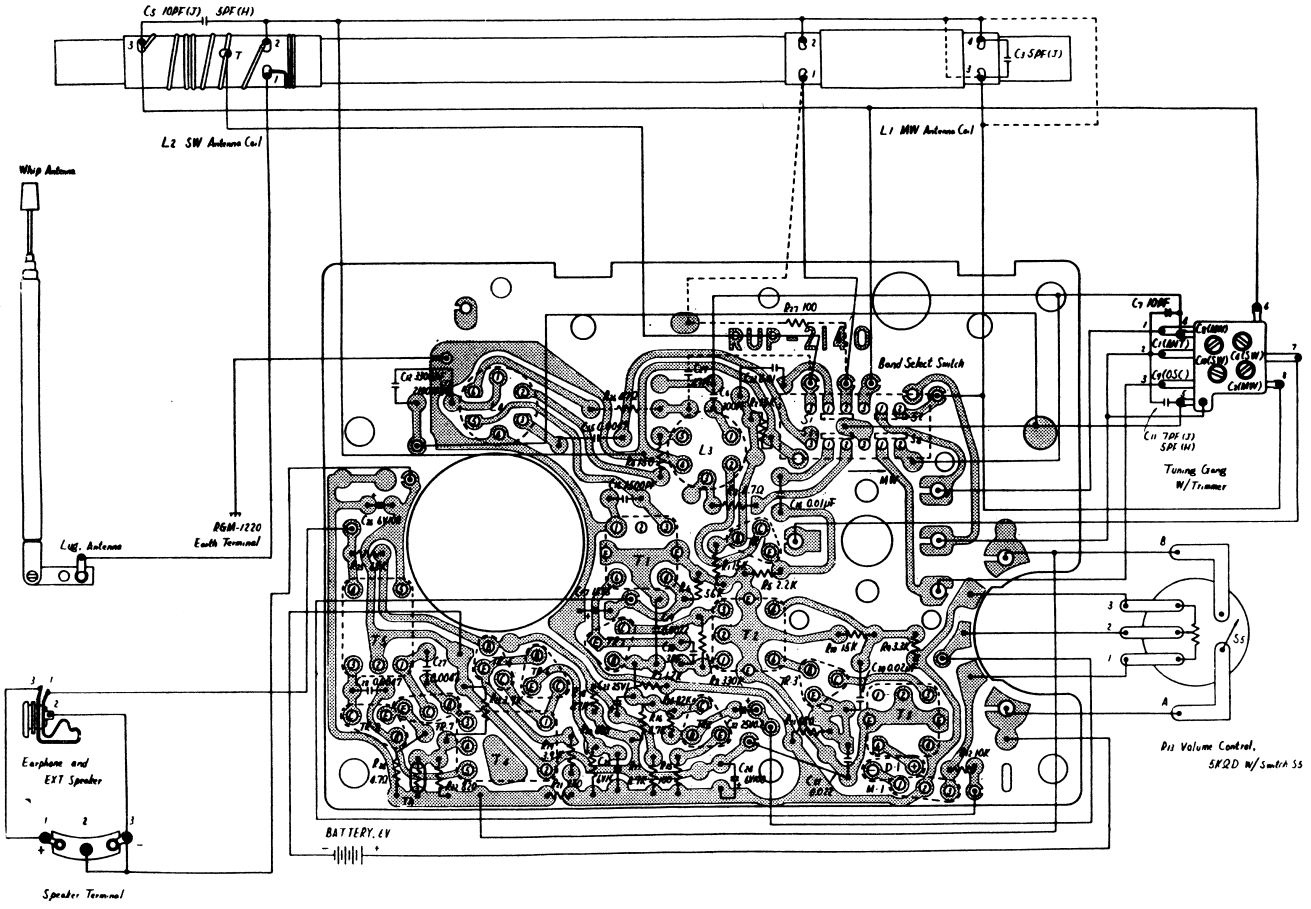

Notes:

1. All resistor values in ohms (K=1000Ω).
2. All capacitor values in micro farads (P=μμF).
3. S_1~S_4 : Band selector switch in "MW" position.
4. S_5 : Power source switch in "OFF" position.
5. Schematic diagram shows both of Models R-210H and R-210J. Model R-210H is different from Model R-210J, and difference of Model R-210H is shown in dotted line.

NATIONAL R-210H or J

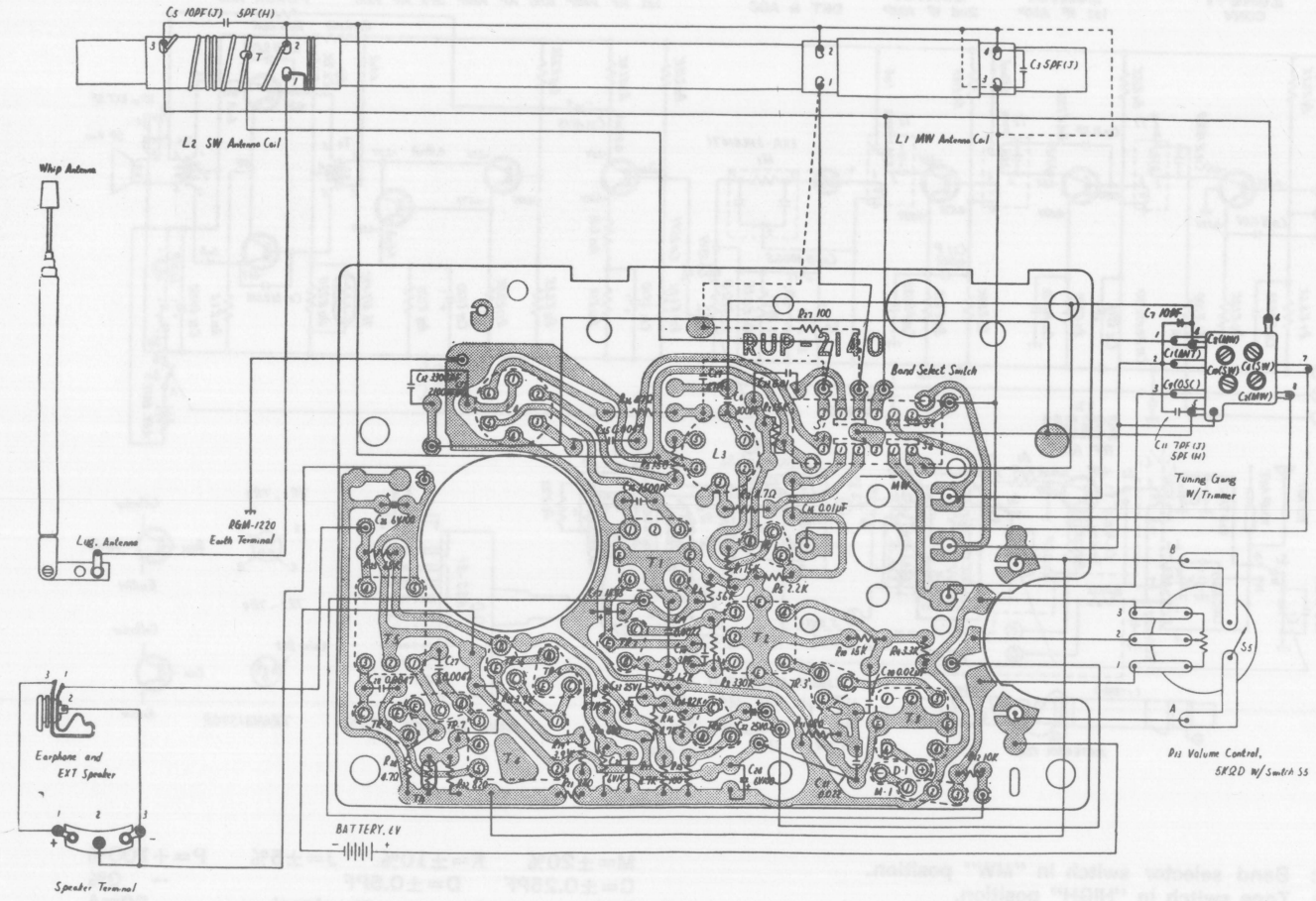

Notes:

1. All resistor values in ohms (K=1000Ω).
2. All capacitor values in micro farads (P=μμF).
3. S1~S4 : Band selector switch in "MW" position.
4. S5 : Power source switch in "OFF" position.
5. Schematic diagram shows both of Models R-210H and R-210J. Model R-210H is different from Model R-210J, and difference of Model R-210H is shown in dotted line.