TR-1	TR-2	TR-3	D-1	TR-4	TR-5&TR-6
2SA102	2SA101 1st IF Amp.	2SA101 2nd IF Amp.	0A90 Det & AGC	2SB175 AF Amp	2SB176×2 Output

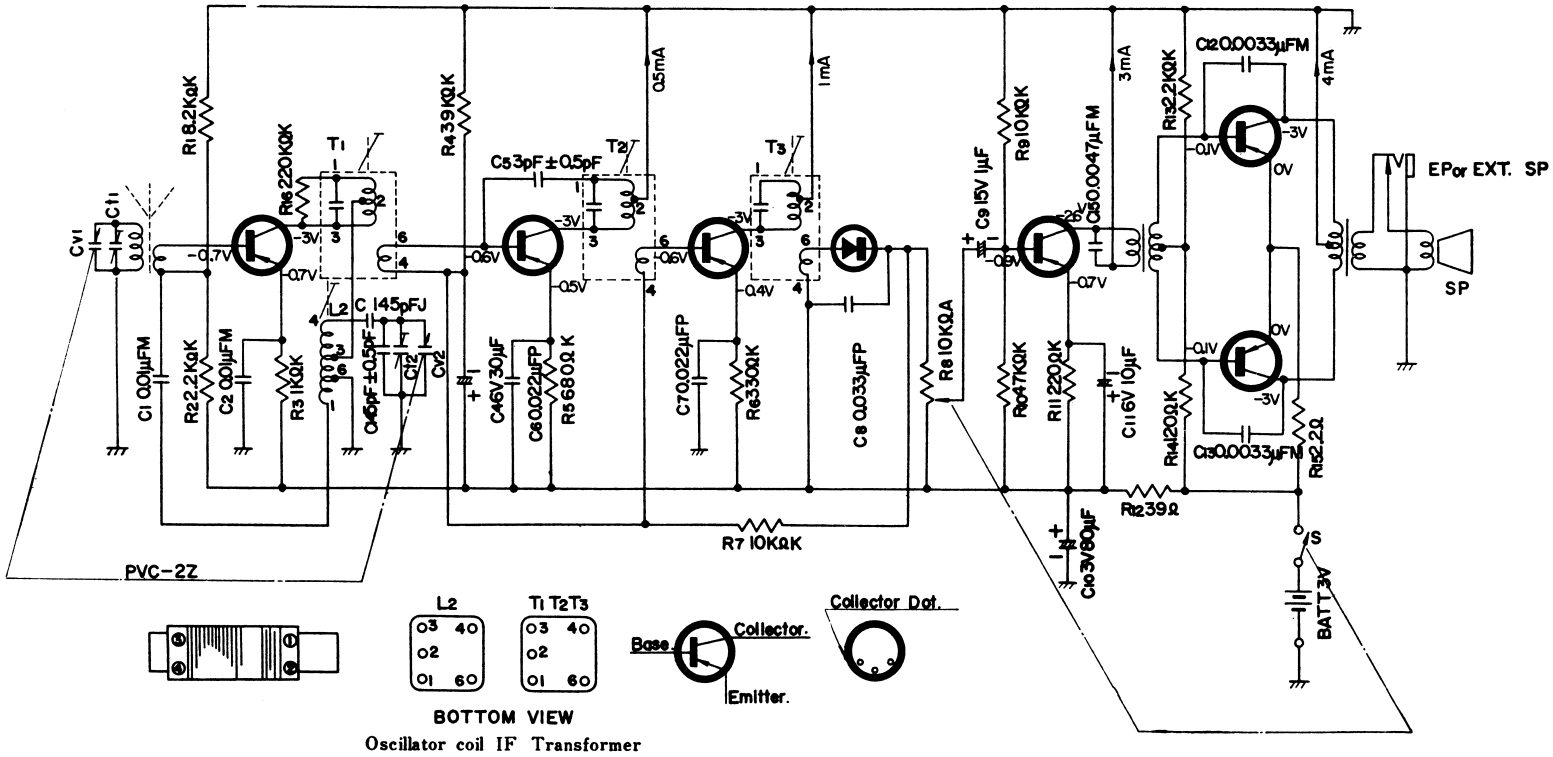

Notes:

1. S: Power source switch in "OFF" position.
2. Voltage measurements are taken under no signal condition with a 10KΩ/Volt voltmeter and are posistive with respect to ground.
3. Capital letters (M, K, J, P) in the circuit diagram show allowable tolerances of resistors and capacitors as follows:
   M=±20% K=±10% J=±5% P=+100% − 0%
4. Battery current: No signal.....12mA
   Maximum output.....90mA
5. PF=pico farad=mmf
   μF=micro farad=MF

NATIONAL R-118

CIRCUIT BOARD

MODEL R-118

Conductor View

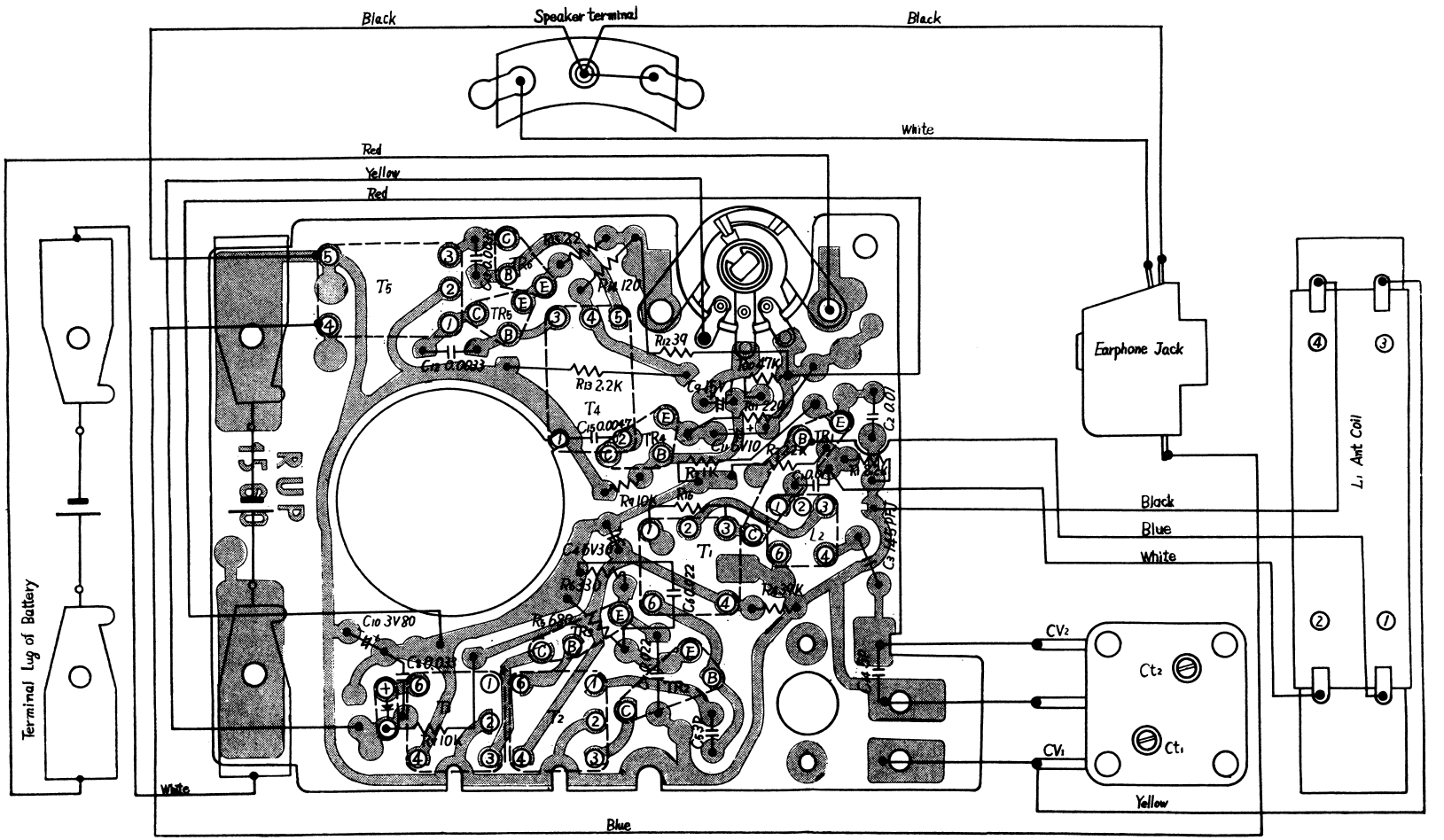

CIRCUIT BOARD

MODEL R-118
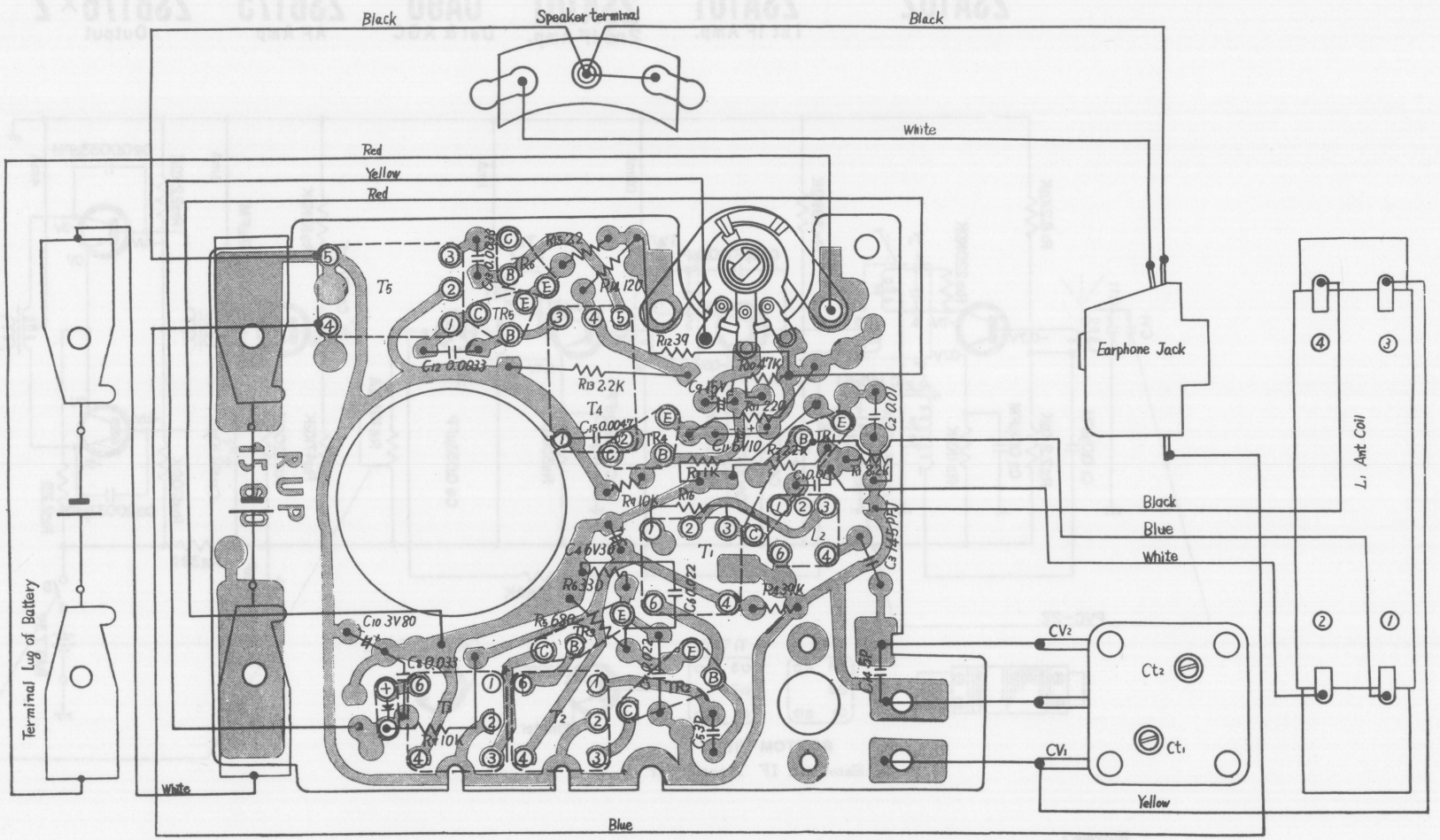
Conductor View