POWER
F / R
MUTE
SUBTITLE
RETURN
MENU
TITLE
AUDIO
SEL
ANGLE
REPEAT
STOP
PAUSE
PLAY
BAND
RANDOM
PAGE
SCAN
C.SP
TRACK
VOLUME
DISP
CLOCK
ST/MONO
GRP
TITLE/
CHAPTER
Panasonic
CAR DVD PLAYER

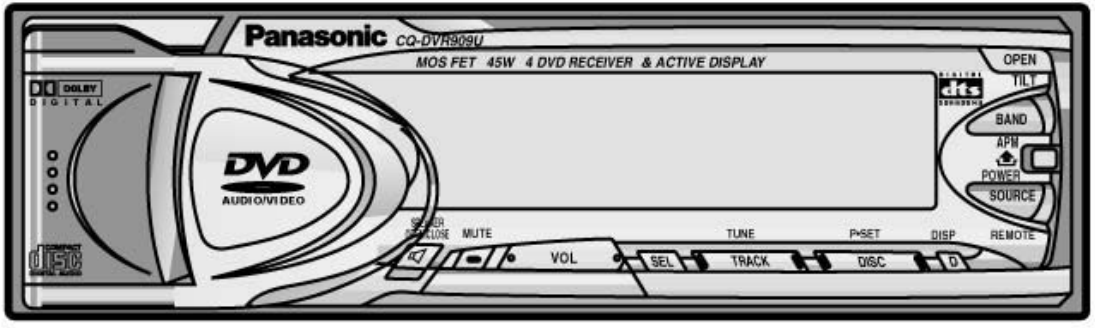
Panasonic CQ-DVR909U
MOS FET 45W 4 DVD RECEIVER & ACTIVE DISPLAY
DOLBY DIGITAL
dts
DVD
AUDIO/VIDEO
OPEN
TILT
BAND
APM
POWER
SOURCE
MUTE
VOL
TUNE
P-SET
DISP
REMOTE
SEL
TRACK
DISC

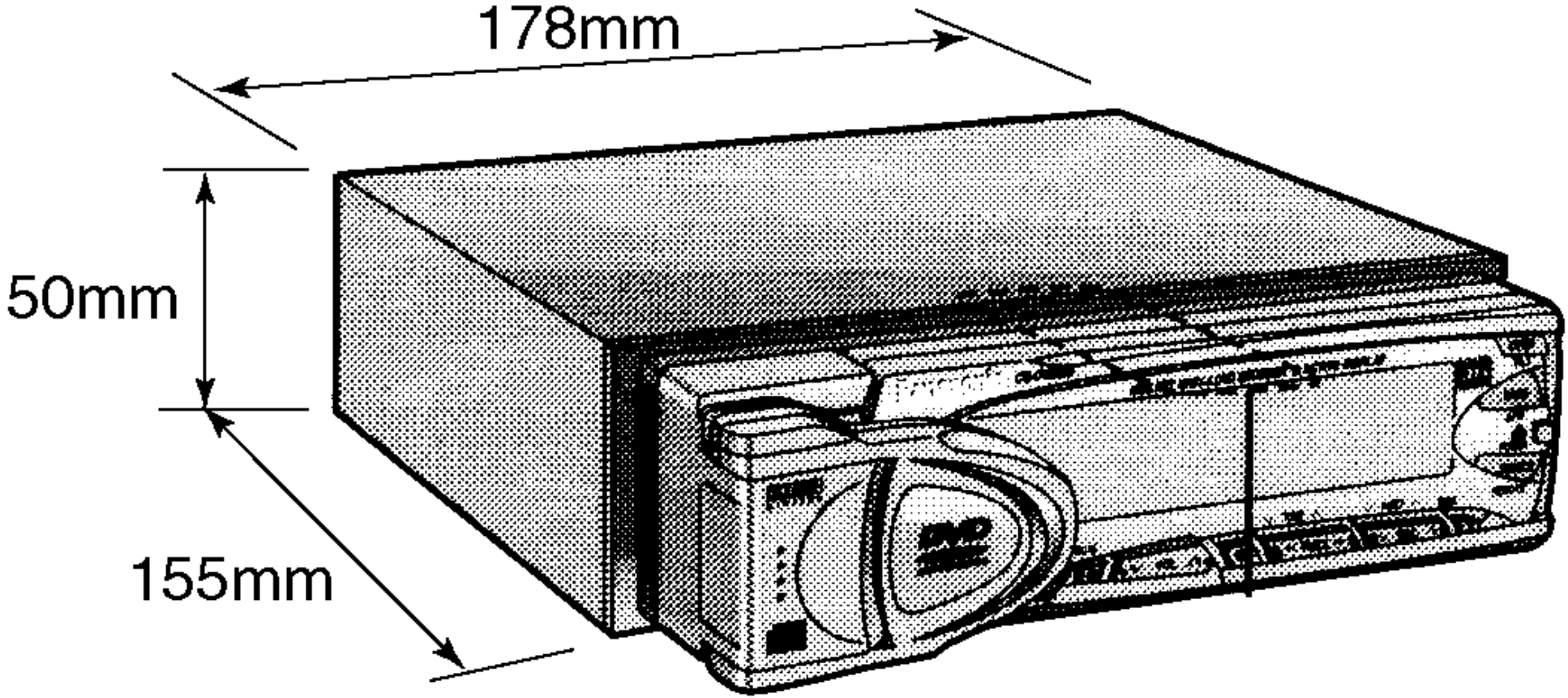
178mm
50mm
155mm

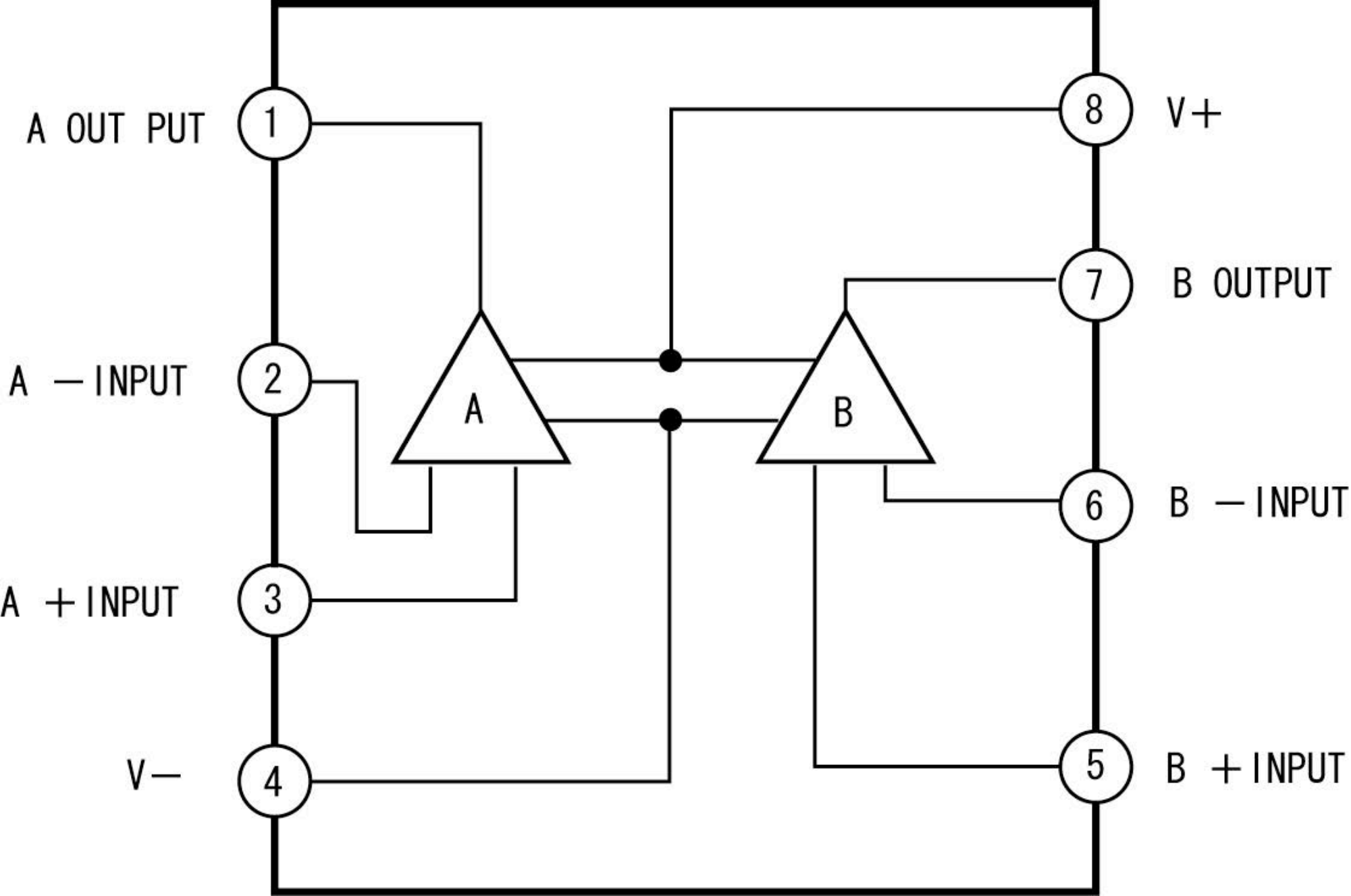
A OUT PUT
1
A －INPUT
2
A ＋INPUT
3
V－
4
8
V＋
7
B OUTPUT
6
B －INPUT
5
B ＋INPUT
A
B

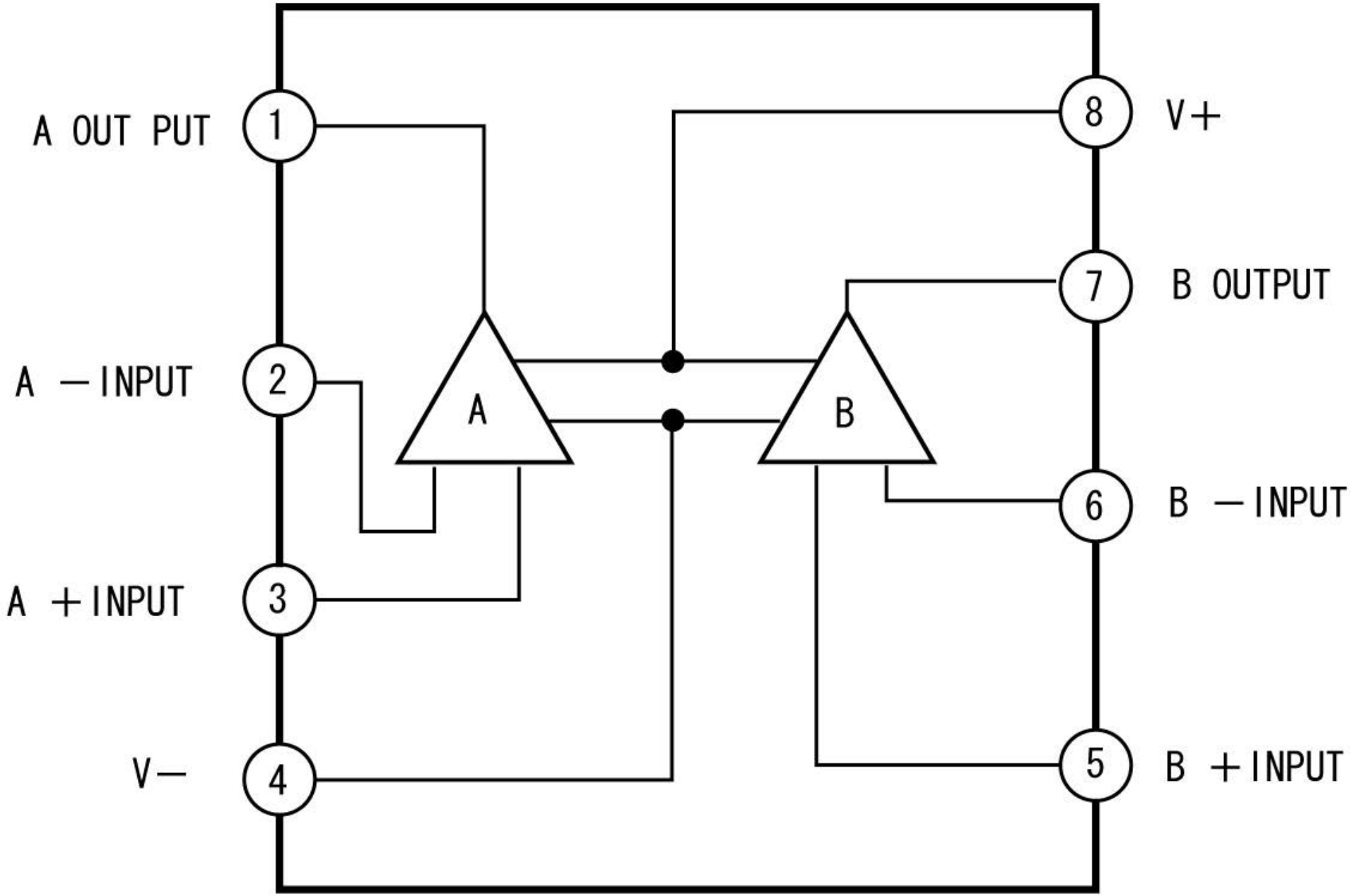
A OUT PUT
1
A －INPUT
2
A ＋INPUT
3
V－
4
8
V＋
7
B OUTPUT
6
B －INPUT
5
B ＋INPUT
A
B

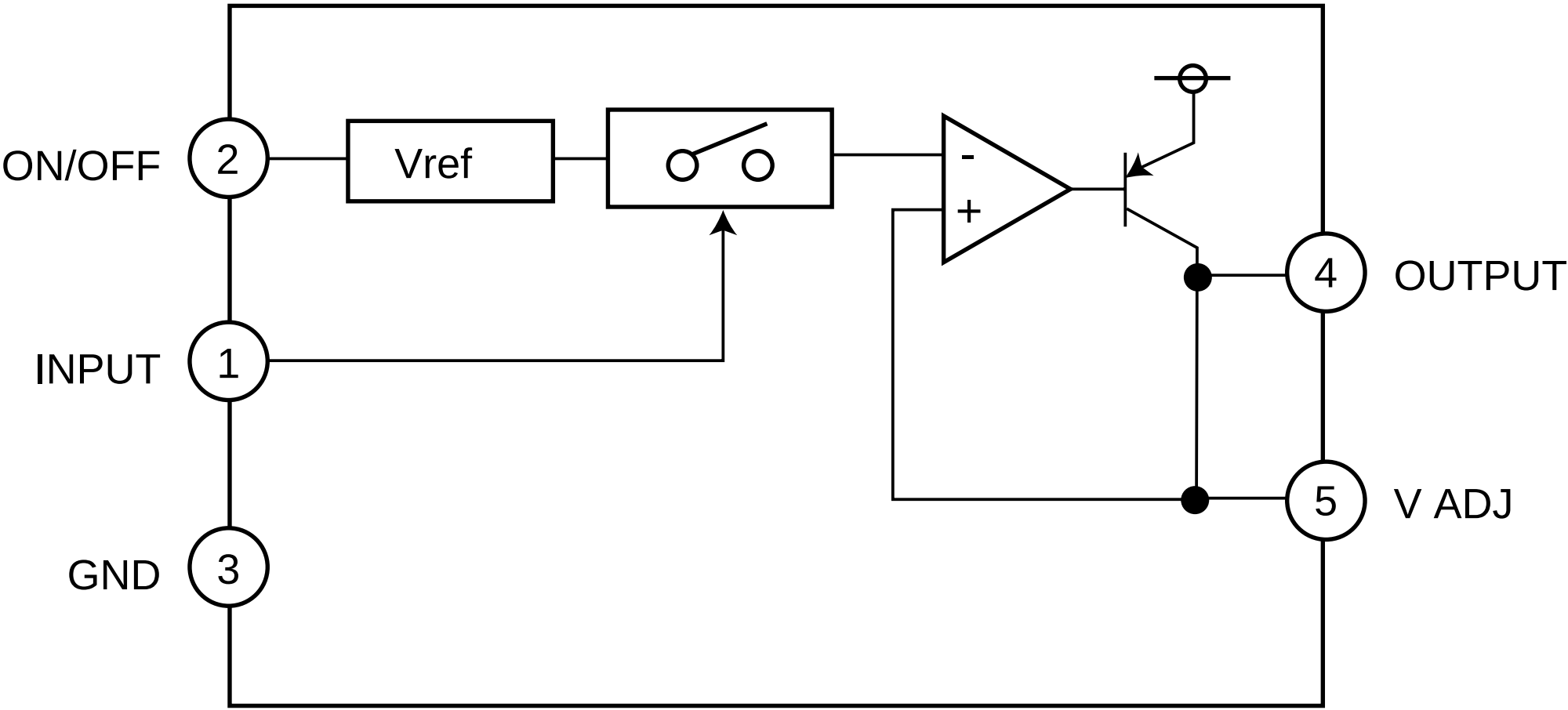
ON/OFF
2
Vref
-
+
4
OUTPUT
INPUT
1
5
V ADJ
GND
3

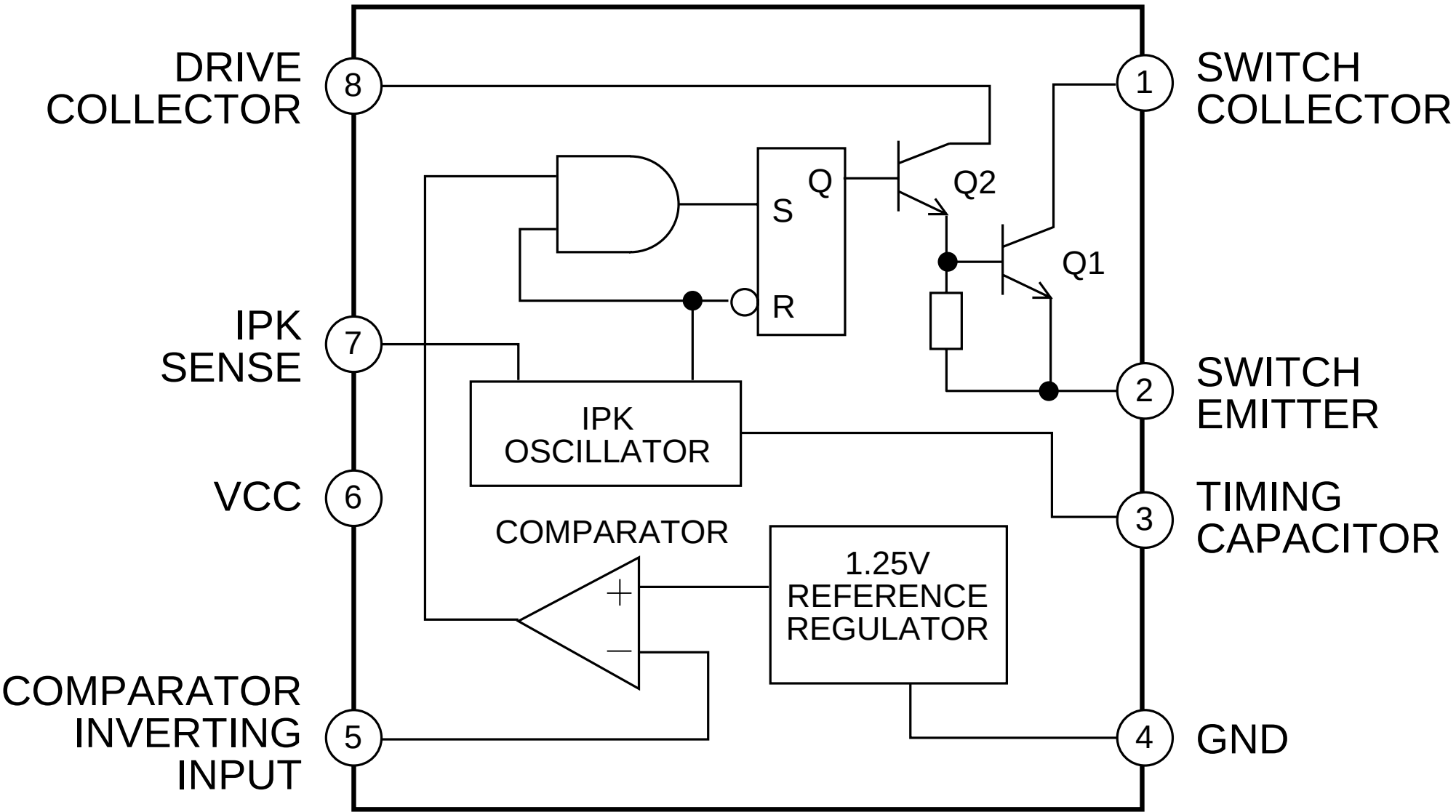
DRIVE COLLECTOR
8
SWITCH COLLECTOR
1
Q
S
R
Q2
Q1
IPK SENSE
7
SWITCH EMITTER
2
IPK OSCILLATOR
VCC
6
TIMING CAPACITOR
3
COMPARATOR
1.25V REFERENCE REGULATOR
+
−
COMPARATOR INVERTING INPUT
5
4
GND

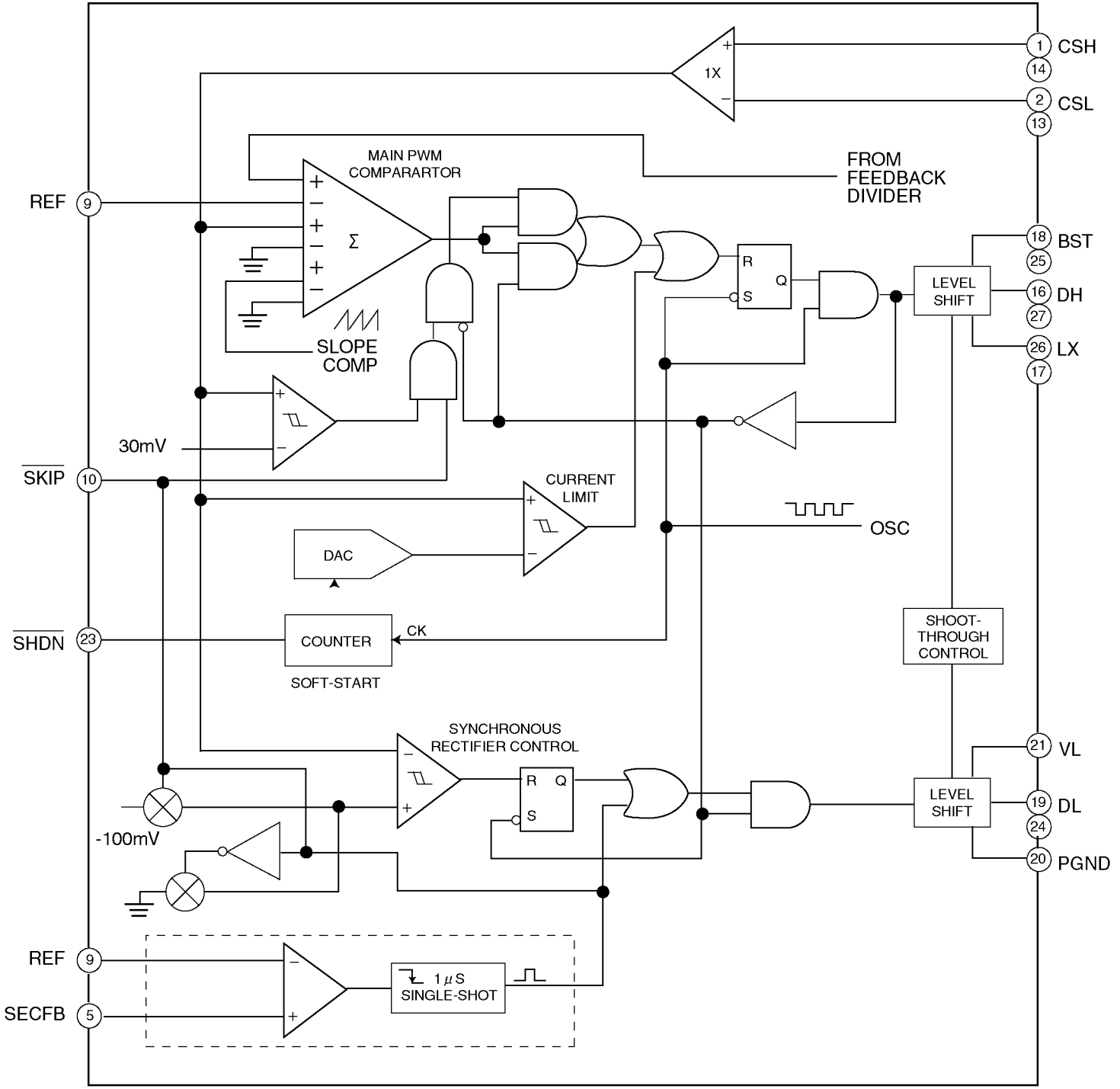
1X
1 CSH
14
2 CSL
13
MAIN PWM
COMPARARTOR
FROM
FEEDBACK
DIVIDER
REF 9
Σ
R
Q
S
18 BST
25
LEVEL
SHIFT
16 DH
27
26 LX
17
SLOPE
COMP
30mV
SKIP 10
CURRENT
LIMIT
OSC
DAC
SHDN 23
COUNTER
CK
SOFT-START
SHOOT-
THROUGH
CONTROL
SYNCHRONOUS
RECTIFIER CONTROL
21 VL
-100mV
LEVEL
SHIFT
19 DL
24
20 PGND
REF 9
1 μS
SINGLE-SHOT
SECFB 5

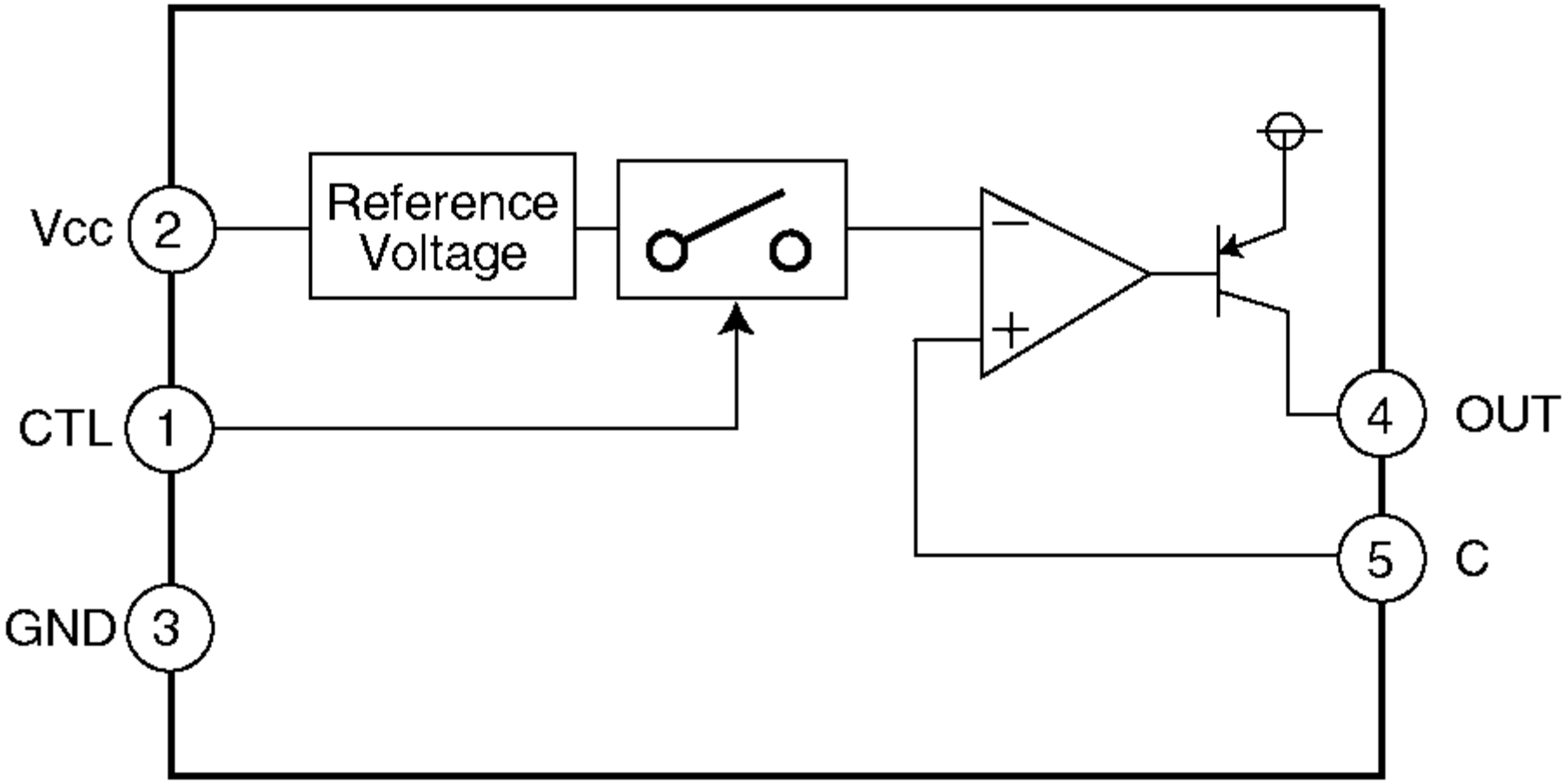
Vcc
2
Reference
Voltage
CTL
1
GND
3
4
OUT
5
C

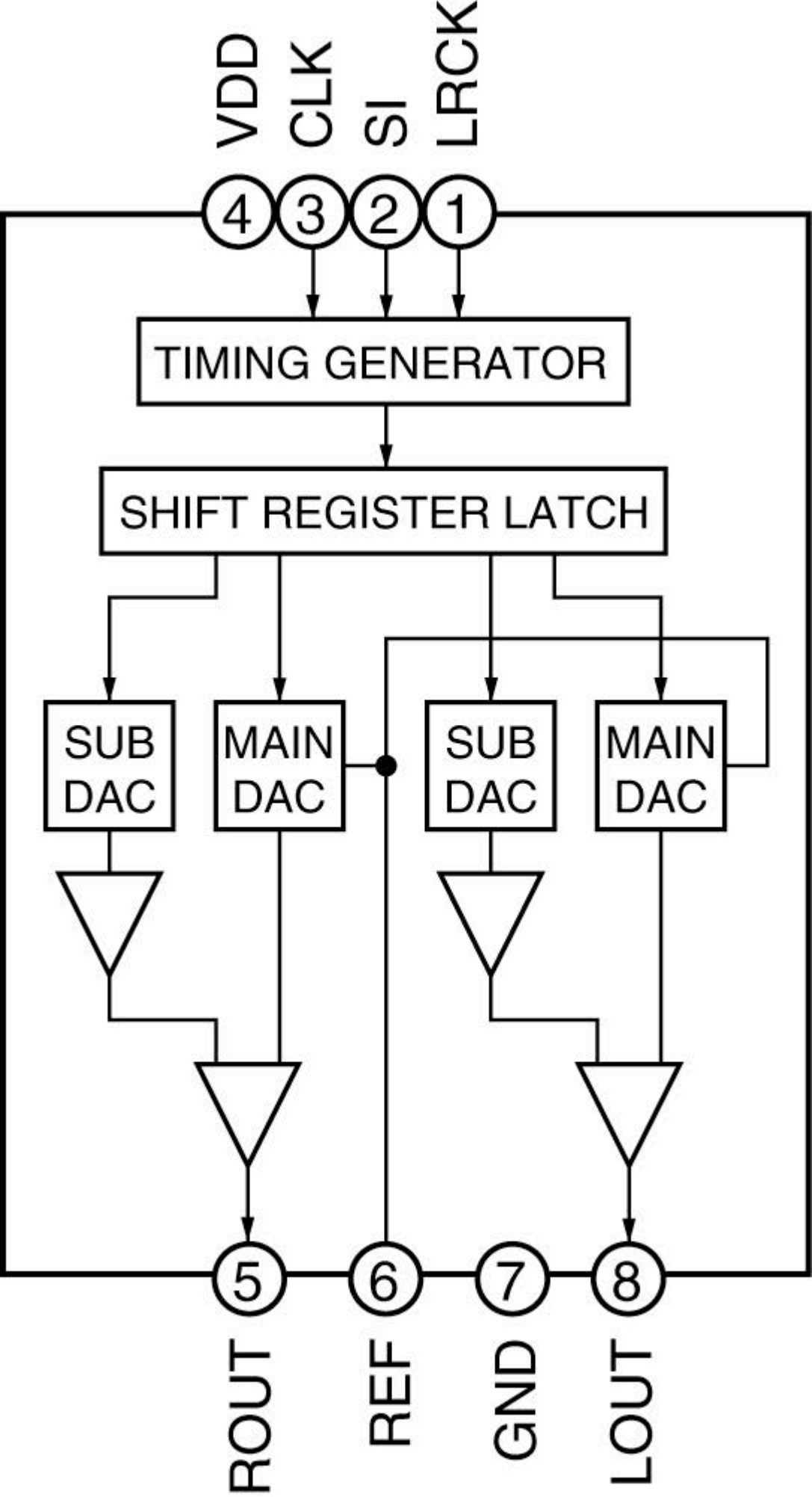
VDD
CLK
SI
LRCK
4
3
2
1
TIMING GENERATOR
SHIFT REGISTER LATCH
SUB DAC
MAIN DAC
SUB DAC
MAIN DAC
5
6
7
8
ROUT
REF
GND
LOUT

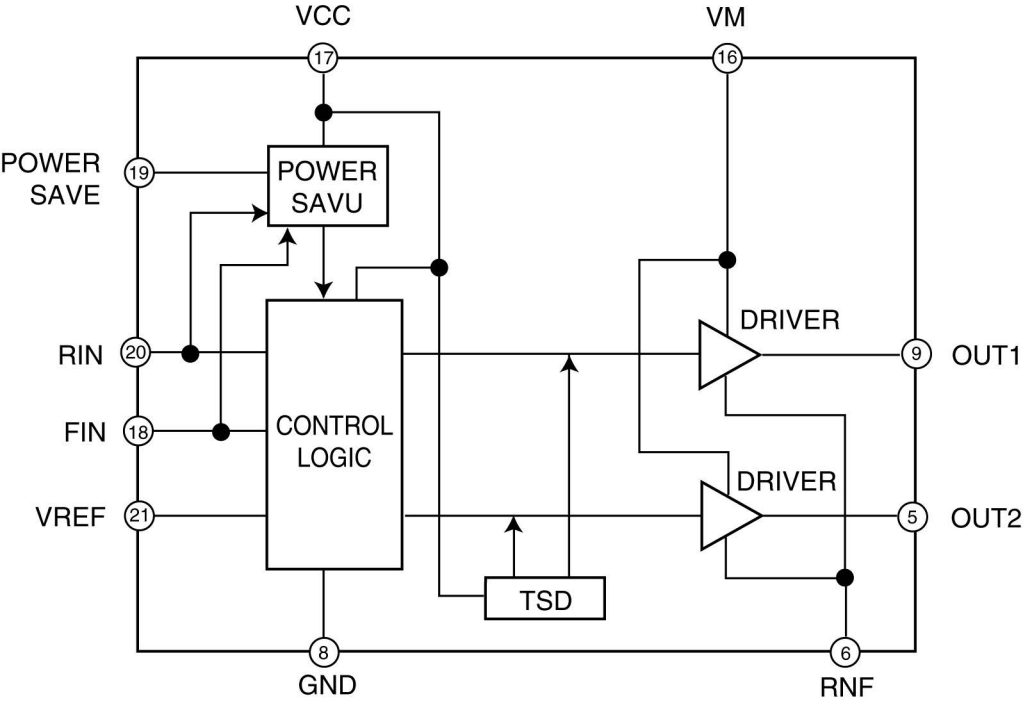
VCC
VM
17
16
POWER
SAVE
19
POWER
SAVU
RIN
20
FIN
18
VREF
21
CONTROL
LOGIC
DRIVER
DRIVER
9
OUT1
5
OUT2
TSD
8
GND
6
RNF

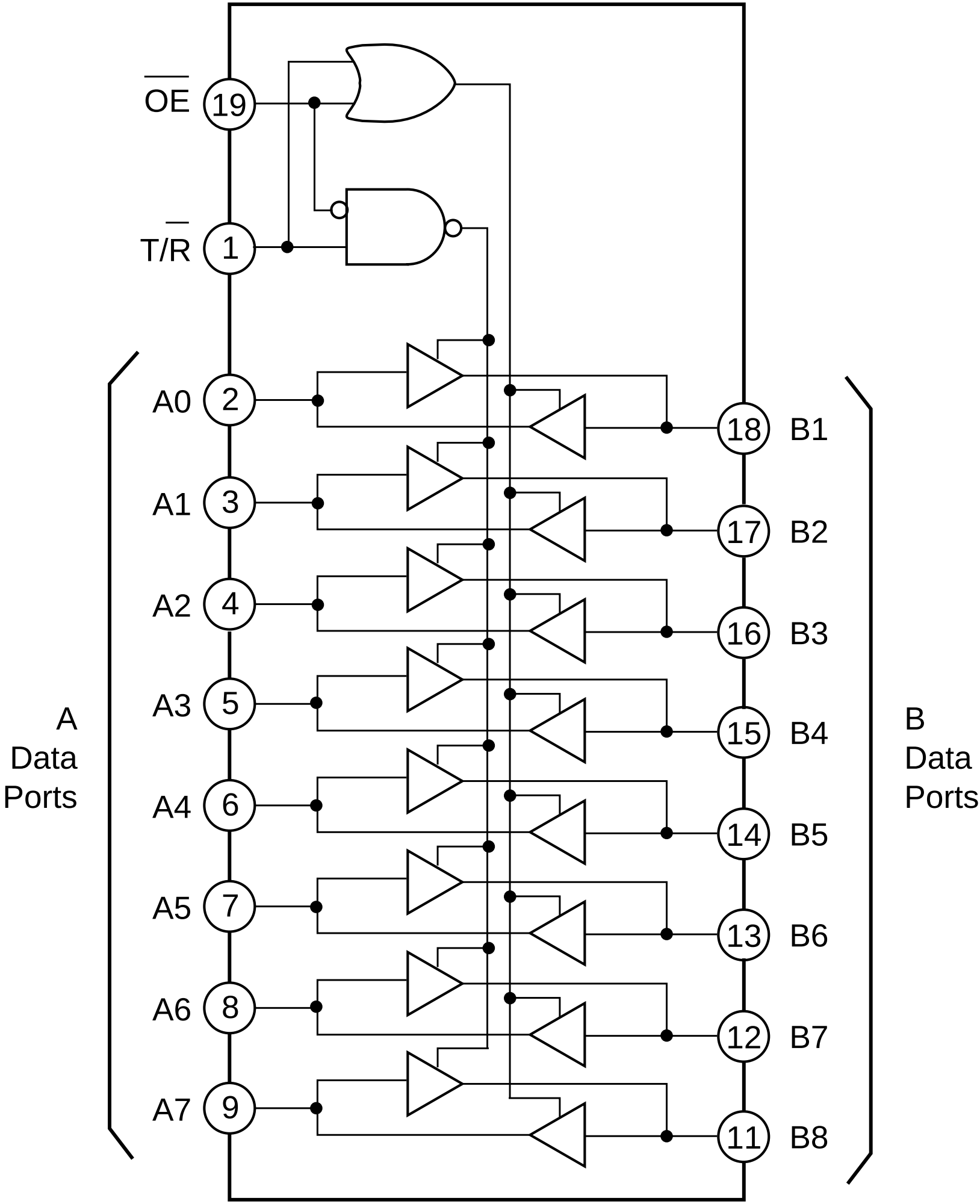
OE
19
T/R
1
A0
2
A1
3
A2
4
A3
5
A4
6
A5
7
A6
8
A7
9
18
B1
17
B2
16
B3
15
B4
14
B5
13
B6
12
B7
11
B8
A
Data
Ports
B
Data
Ports

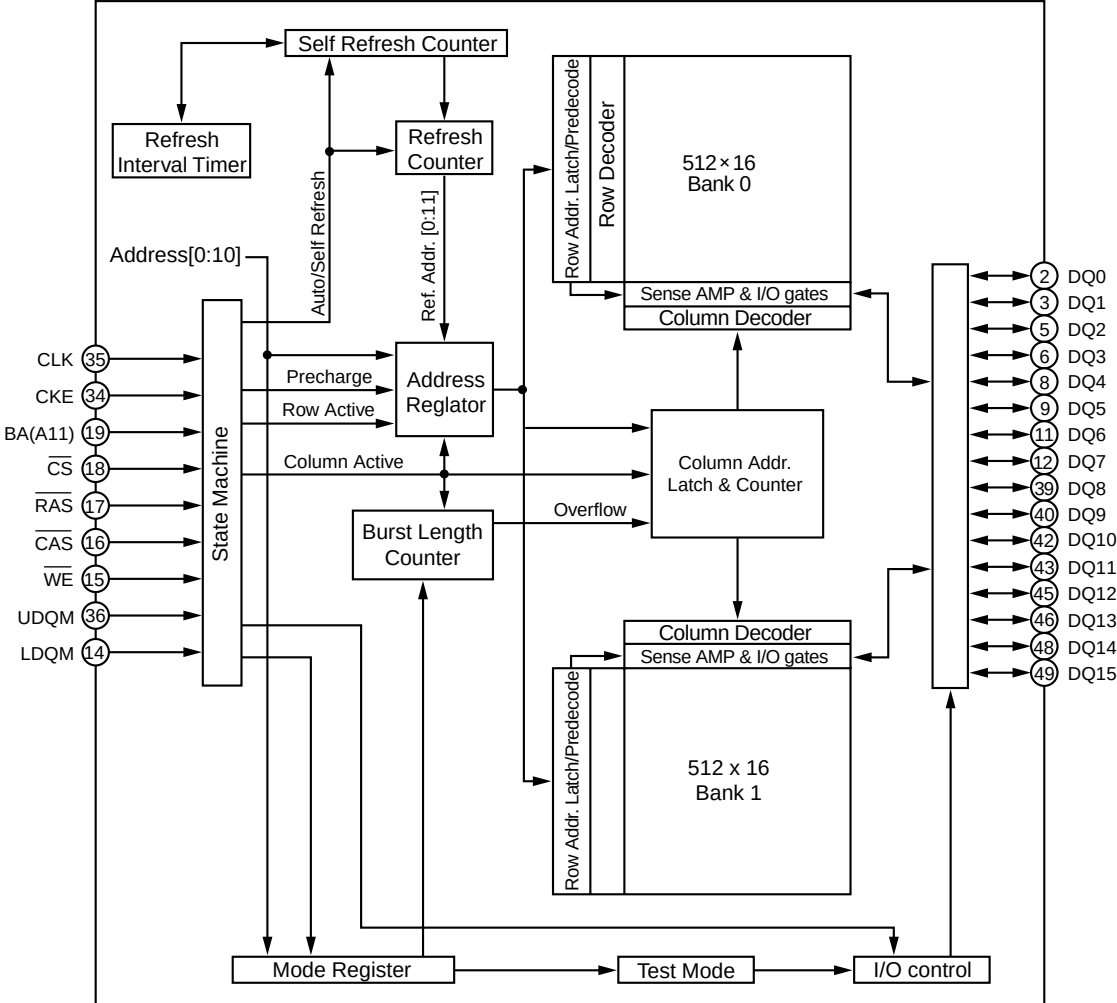
Self Refresh Counter
Refresh Interval Timer
Refresh Counter
Auto/Self Refresh
Ref. Addr. [0:11]
Address[0:10]
Row Addr. Latch/Predecode
Row Decoder
512×16 Bank 0
Sense AMP & I/O gates
Column Decoder
CLK 35
CKE 34
BA(A11) 19
CS 18
RAS 17
CAS 16
WE 15
UDQM 36
LDQM 14
State Machine
Precharge
Row Active
Column Active
Address Reglator
Burst Length Counter
Overflow
Column Addr. Latch & Counter
Column Decoder
Sense AMP & I/O gates
Row Addr. Latch/Predecode
512 x 16 Bank 1
2 DQ0
3 DQ1
5 DQ2
6 DQ3
8 DQ4
9 DQ5
11 DQ6
12 DQ7
39 DQ8
40 DQ9
42 DQ10
43 DQ11
45 DQ12
46 DQ13
48 DQ14
49 DQ15
Mode Register
Test Mode
I/O control

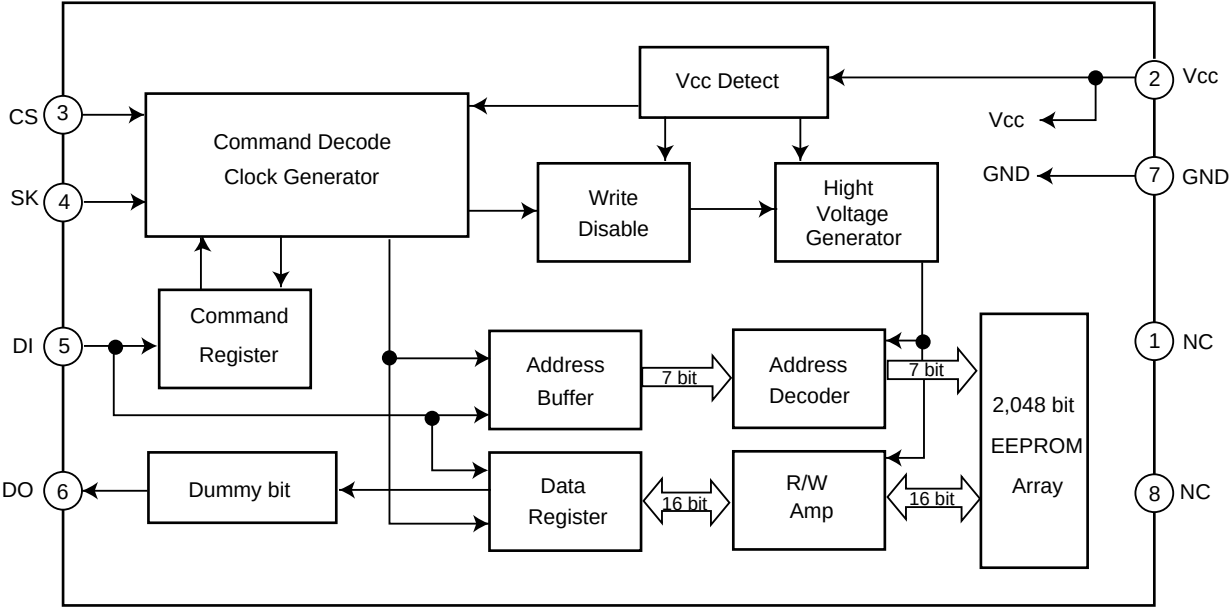
Vcc Detect
Command Decode
Clock Generator
Write
Disable
Hight
Voltage
Generator
Command
Register
Address
Buffer
7 bit
Address
Decoder
7 bit
2,048 bit
EEPROM
Array
Dummy bit
Data
Register
16 bit
R/W
Amp
16 bit
CS
3
SK
4
DI
5
DO
6
Vcc
2
Vcc
GND
7
GND
1
NC
8
NC

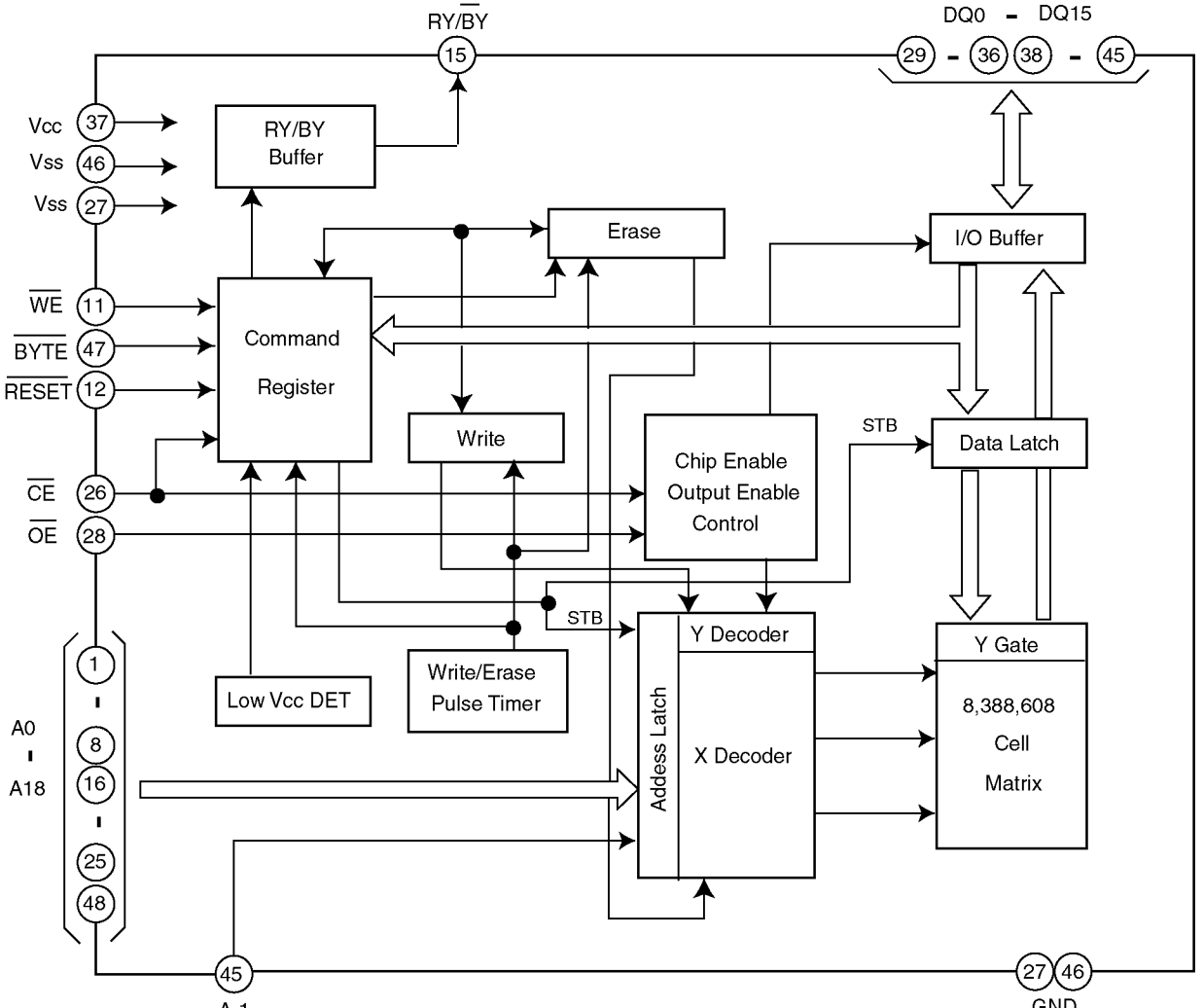
RY/BY
15
DQ0 - DQ15
29 - 36 38 - 45
Vcc 37
Vss 46
Vss 27
RY/BY Buffer
Erase
I/O Buffer
WE 11
BYTE 47
RESET 12
Command Register
Write
Chip Enable Output Enable Control
STB
Data Latch
CE 26
OE 28
STB
Y Decoder
Y Gate
1
8
16
25
48
A0 - A18
Low Vcc DET
Write/Erase Pulse Timer
Addess Latch
X Decoder
8,388,608 Cell Matrix
45
A-1
27 46
GND

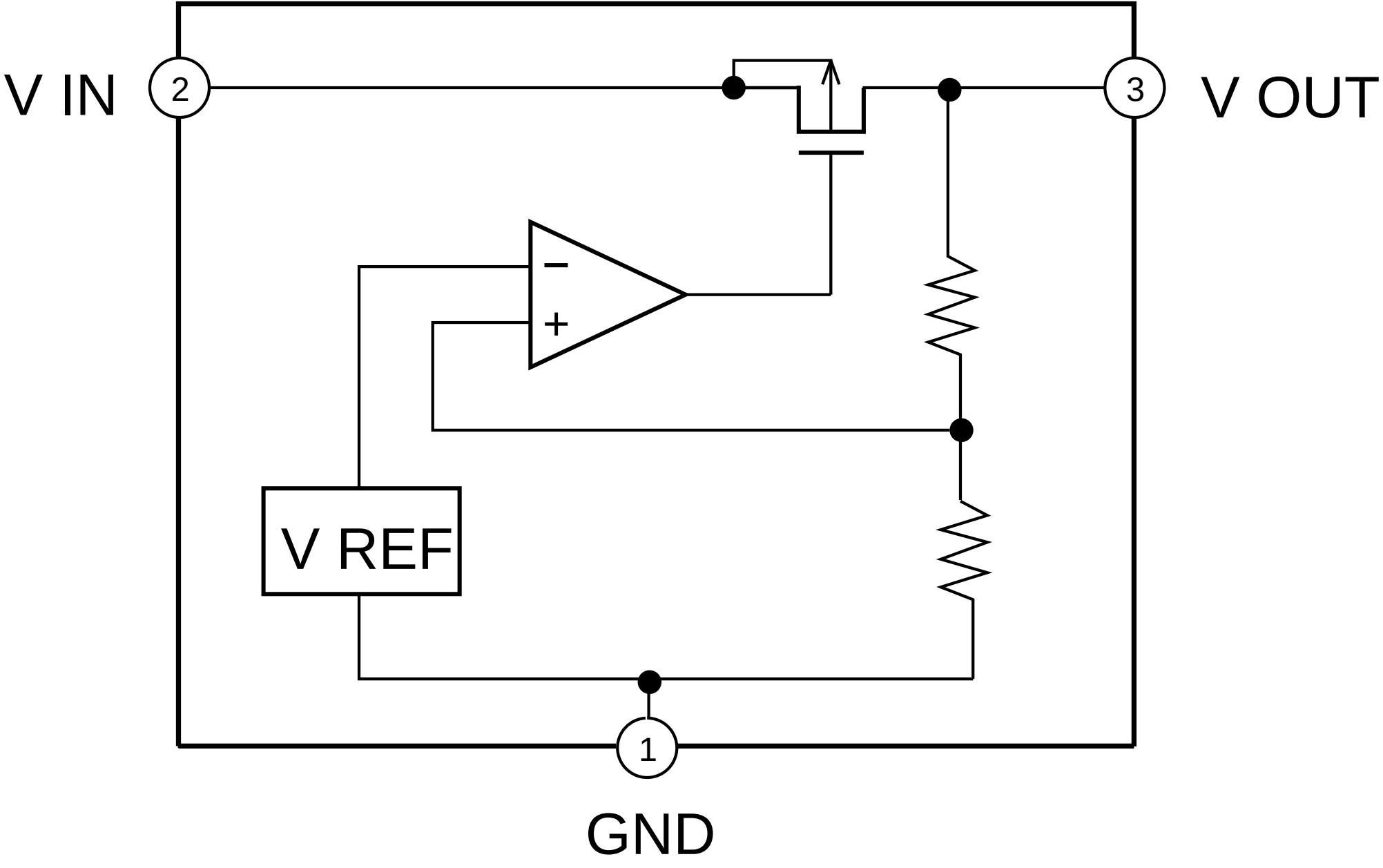
V IN
2
3
V OUT
−
+
V REF
1
GND

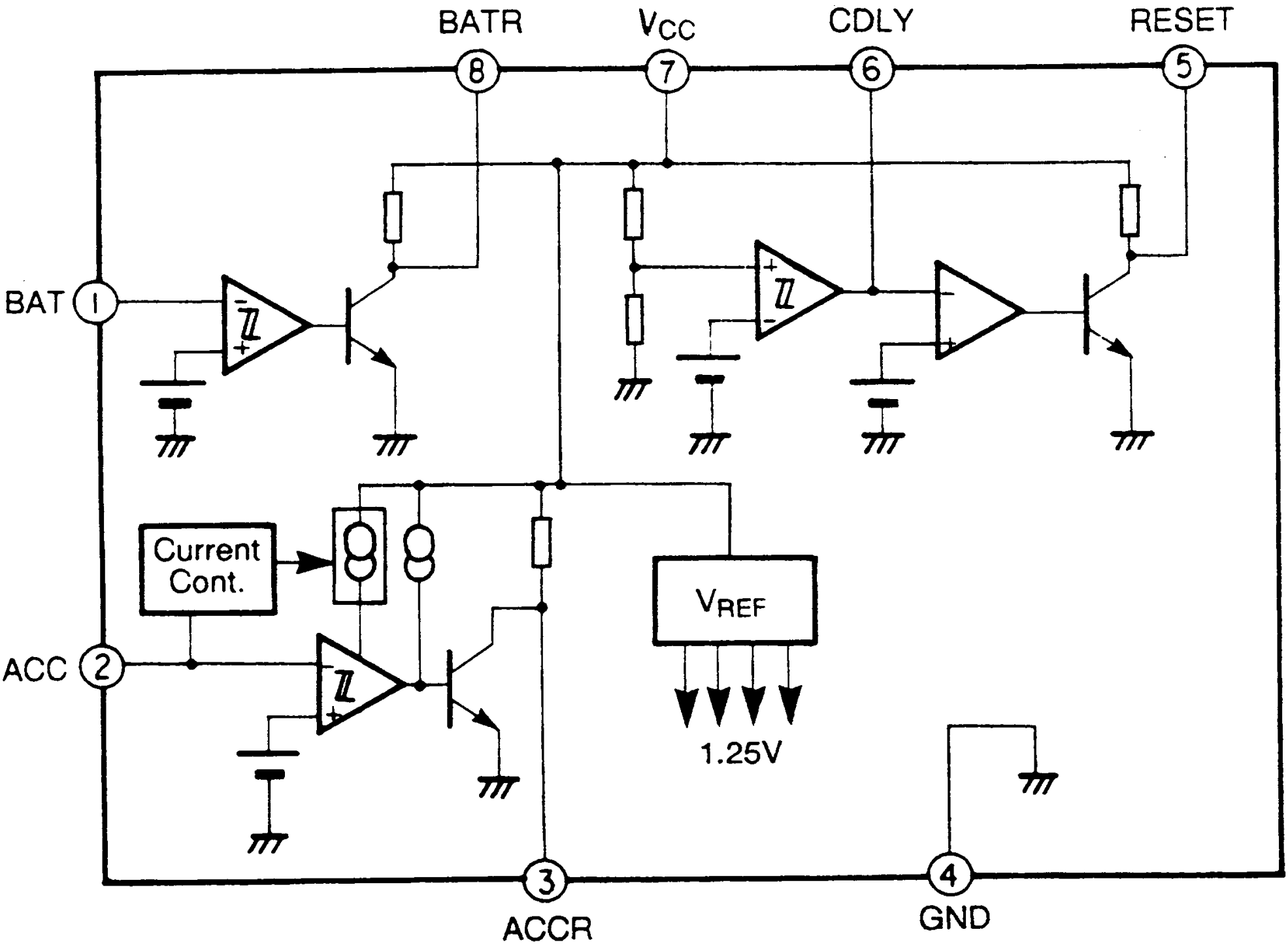
BATR
VCC
CDLY
RESET
8
7
6
5
BAT
1
ACC
2
Current
Cont.
VREF
1.25V
3
ACCR
4
GND

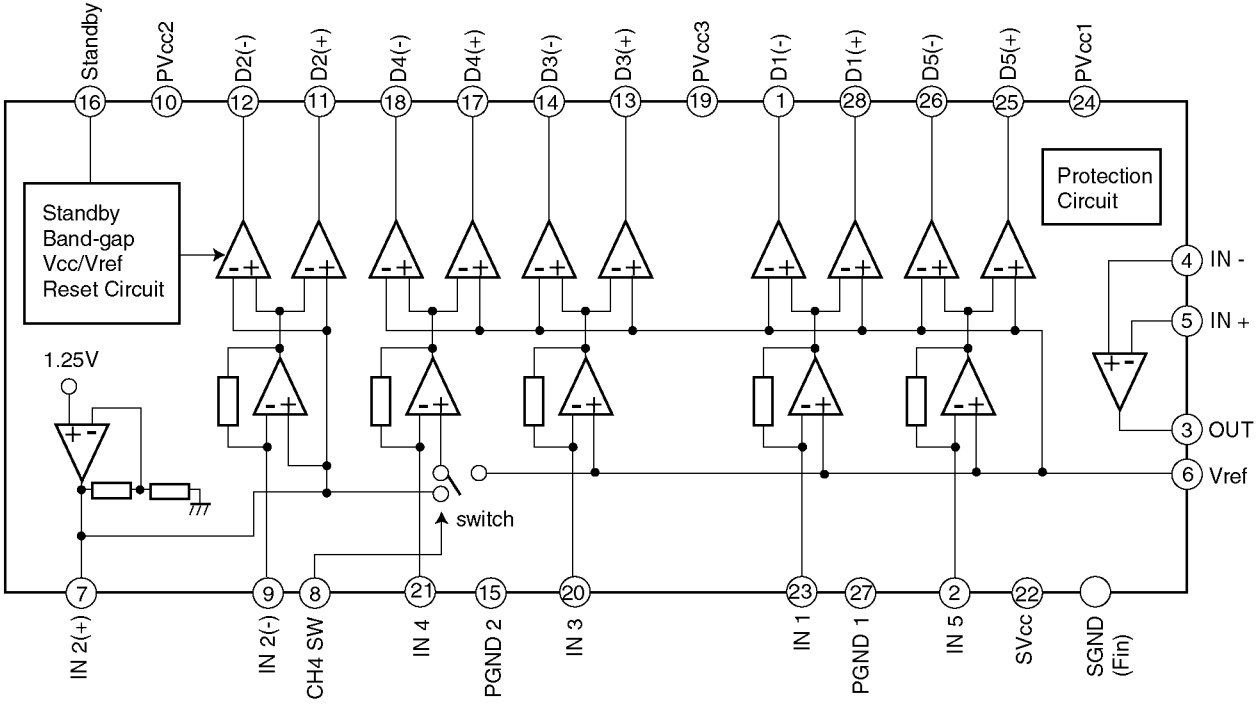
Standby
PVcc2
D2(-)
D2(+)
D4(-)
D4(+)
D3(-)
D3(+)
PVcc3
D1(-)
D1(+)
D5(-)
D5(+)
PVcc1
16
10
12
11
18
17
14
13
19
1
28
26
25
24
Standby
Band-gap
Vcc/Vref
Reset Circuit
Protection
Circuit
1.25V
4 IN -
5 IN +
3 OUT
6 Vref
switch
7
9
8
21
15
20
23
27
2
22
IN 2(+)
IN 2(-)
CH4 SW
IN 4
PGND 2
IN 3
IN 1
PGND 1
IN 5
SVcc
SGND
(Fin)

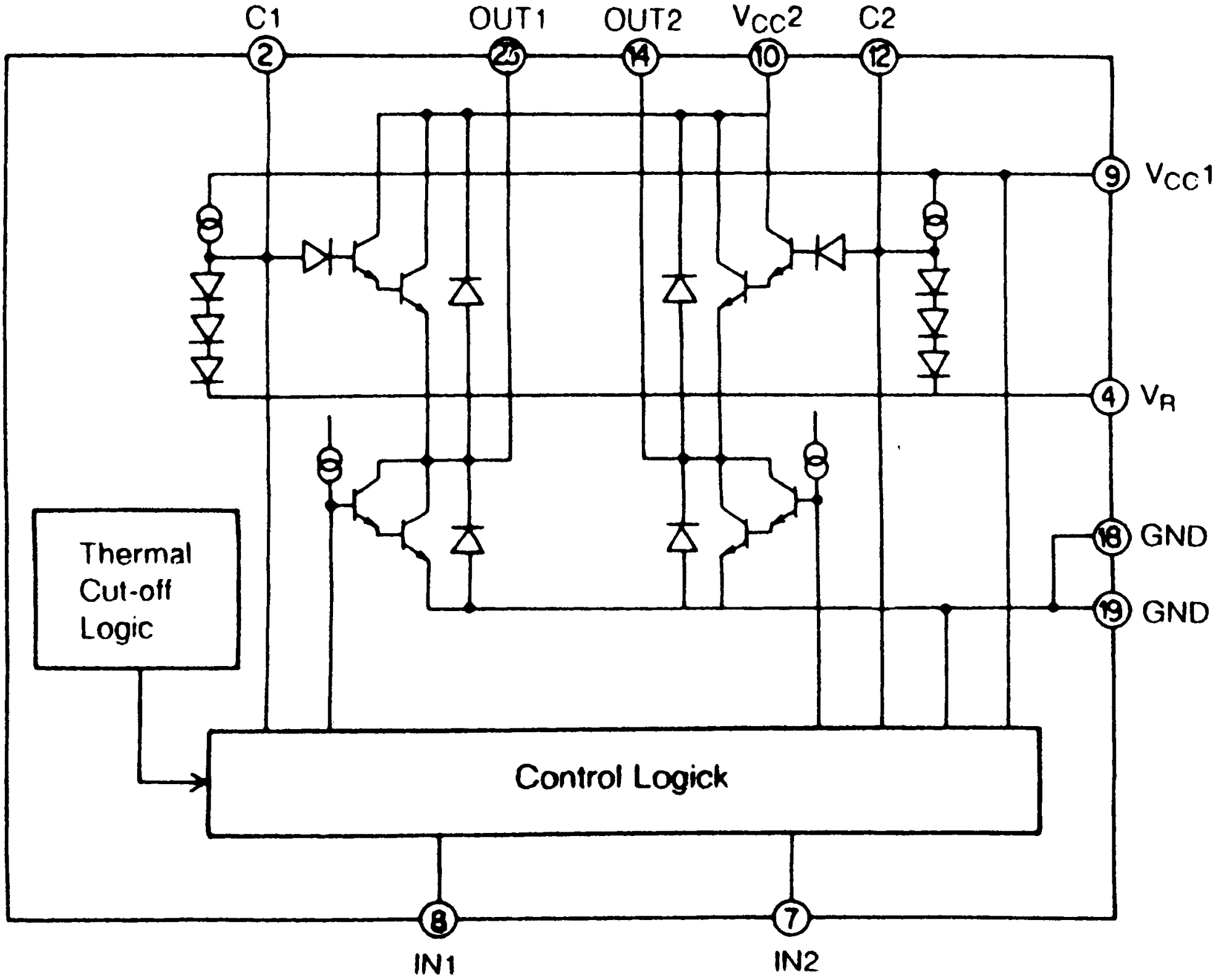
C1
OUT1
OUT2
$V_{CC}2$
C2
2
26
14
10
12
9
$V_{CC}1$
4
V_R
18
GND
19
GND
Thermal
Cut-off
Logic
Control Logick
8
7
IN1
IN2

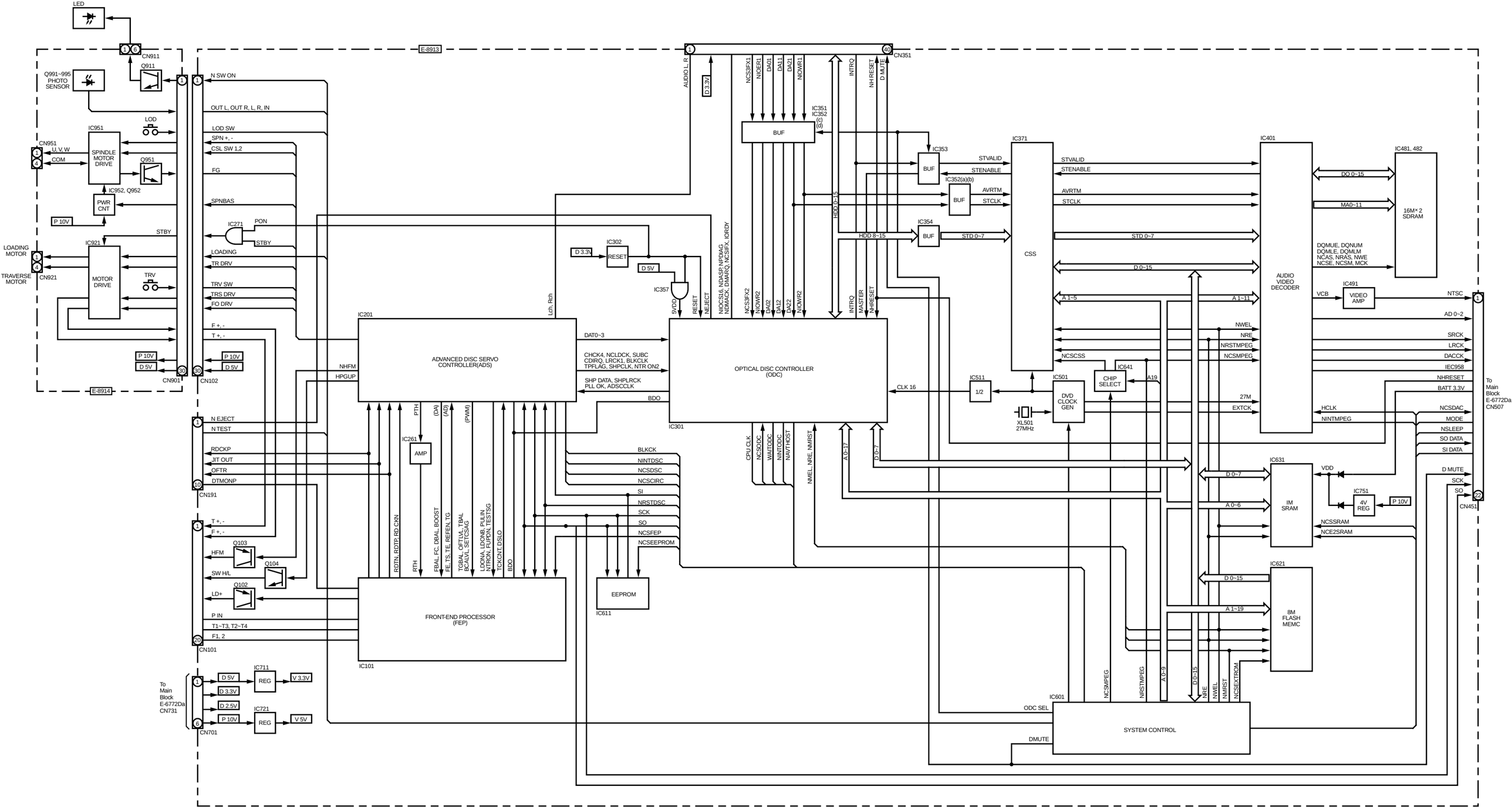
LED
CN911
Q911
Q991~995 PHOTO SENSOR
N SW ON
OUT L, OUT R, L, R, IN
LOD
LOD SW
IC951
SPINDLE MOTOR DRIVE
SPN +, -
CSL SW 1,2
CN951
U, V, W
COM
Q951
FG
IC952, Q952
PWR CNT
SPNBAS
P 10V
IC271
PON
STBY
LOADING MOTOR
TRAVERSE MOTOR
IC921
MOTOR DRIVE
CN921
LOADING
TR DRV
TRV
TRV SW
TRS DRV
FO DRV
F +, -
T +, -
D 5V
CN901
CN102
E-8913
E-8914
AUDIO L R
D 3.3V
CN351
NCS3PX1
NIOER1
DA01
DA11
DA21
NIOWR1
INTRQ
NH1RESET
D MUTE
IC351
IC352
(c)
(d)
BUF
IC353
IC352(a)(b)
IC354
HDD 0~15
HDD 8~15
STD 0~7
IC371
CSS
STVALID
STENABLE
AVRTM
STCLK
IC401
AUDIO VIDEO DECODER
IC481, 482
16M× 2 SDRAM
DQ 0~15
MA0~11
DQMUE, DQNUM
DQMLE, DQMLM
NCAS, NRAS, NWE
NCSE, NCSM, MCK
D 0~15
A 1~5
A 1~11
IC491
VIDEO AMP
VCB
NTSC
AD 0~2
NWEL
NRE
NRSTMPEG
NCSMPEG
NCSCSS
SRCK
LRCK
DACCK
IEC958
NHRESET
BATT 3.3V
HCLK
NCSDAC
NINTMPEG
MODE
NSLEEP
SO DATA
SI DATA
D MUTE
SCK
SO
CN451
To Main Block E-6772Da CN507
IC302
RESET
D 5V
IC357
SVDD
RESET
REJECT
NIOCS16, NDASP NPDIAG
NDMACK, DMARQ, NCSIPX, IORDY
NCS3PX2
NIOWR2
DA02
DA12
DA22
NIOWR2
MASTER
NHRESET
Lch, Rch
IC201
ADVANCED DISC SERVO CONTROLLER(ADS)
NHFM
HPGUP
DAT0~3
CHCK4, NCLDCK, SUBC
CDIRQ, LRCK1, BLKCLK
TPFLAG, SHPCLK, NTR ON2
SHP DATA, SHPLRCK
PLL OK, ADSCCLK
BDO
IC301
OPTICAL DISC CONTROLLER (ODC)
CLK 16
IC511
1/2
XL501
27MHz
IC501
DVD CLOCK GEN
27M
EXTCK
IC641
CHIP SELECT
A19
CPU CLK
NCSODC
WAITODC
NINTODC
NAVTHOST
NMEL, NRE, NMRST
A 0~17
D 0~7
IC631
IM SRAM
VDD
IC751
4V REG
P 10V
NCSSRAM
NCE2SRAM
A 0~6
IC621
8M FLASH MEMC
A 1~19
N EJECT
N TEST
RDCKP
JIT OUT
OFTR
DTMONP
CN191
T +, -
F +, -
HFM
SW H/L
LD+
Q103
Q104
Q102
P IN
T1~T3, T2~T4
F1, 2
CN101
IC101
FRONT-END PROCESSOR (FEP)
PTH
(DA)
(AD)
(PWM)
RTH
RDTN, RDTP, RD CKN
FBAL, FC, DBAL, BOOST
FE, TS, TE, REFEN, TG
TGBAL, OFTUA, TBAL
BCAUL, SETCSAG
LDONA, LDONB, PULIN
NTRON, FUPDN, TESTSG
TCKCNT, DSLO
BDO
IC261
AMP
BLKCK
NINTDSC
NCSDSC
NCSCIRC
SI
NRSTDSC
SCK
SO
NCSFEP
NCSEEPROM
IC611
EEPROM
IC601
SYSTEM CONTROL
ODC SEL
DMUTE
To Main Block E-6772Da CN731
IC711
REG
V 3.3V
D 2.5V
IC721
V 5V
CN701

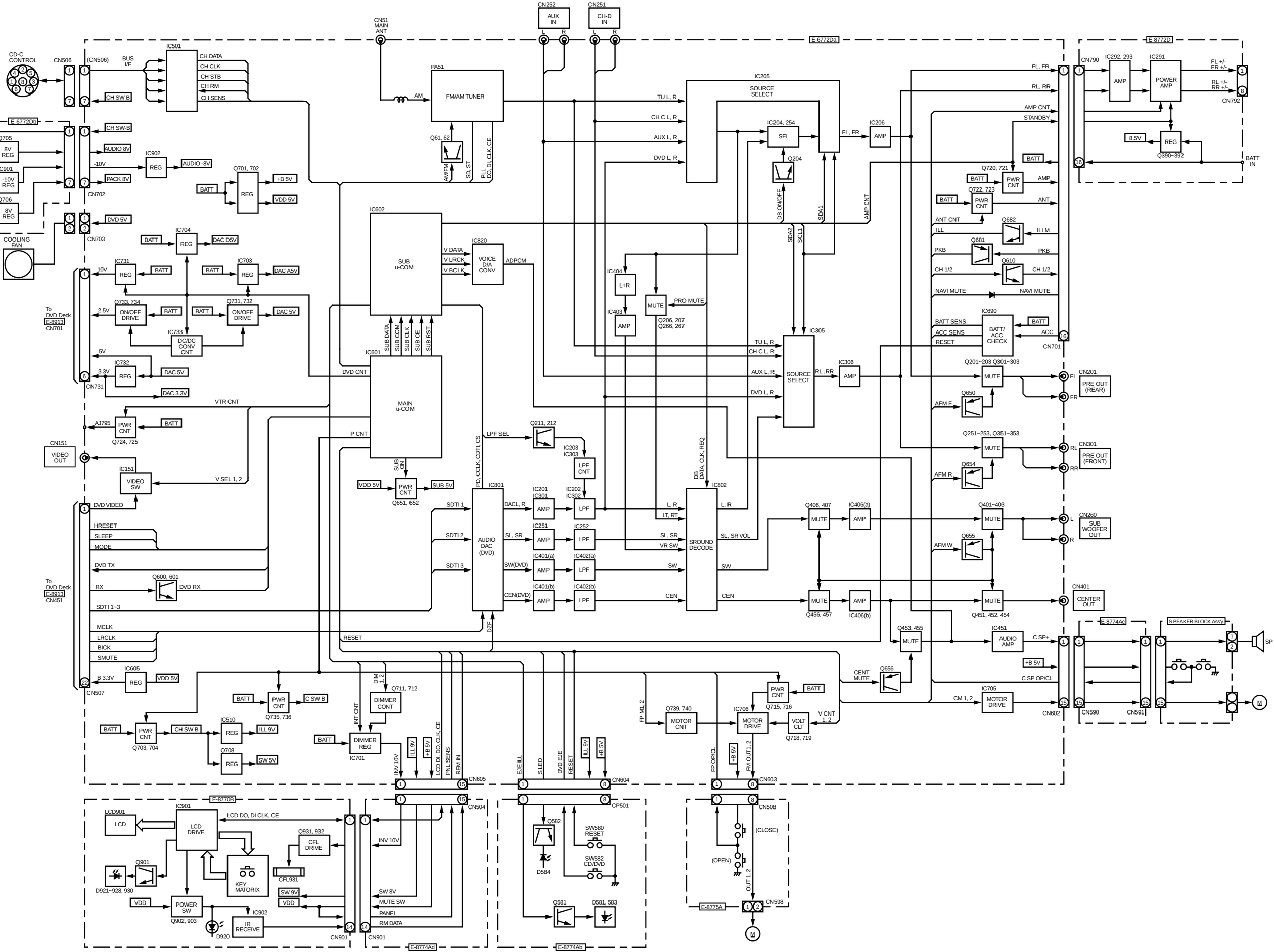

CN51 MAIN ANT
CN252 AUX IN
CN251 CH-D IN
E-6772Da
E-8772D
CD-C CONTROL
CN506
(CN506)
BUS I/F
IC501
CH DATA
CH CLK
CH STB
CH RM
CH SENS
CH SW-B
PA51
FM/AM TUNER
AM
Q61, 62
AM/FM
SD, ST
PLL DO, DI, CLK, CE
IC205
SOURCE SELECT
TU L, R
CH C L, R
AUX L, R
DVD L, R
IC204, 254
SEL
Q204
FL, FR
IC206
AMP
FL, FR
RL, RR
AMP CNT
STANDBY
CN790
IC292, 293
AMP
IC291
POWER AMP
FL +/- FR +/-
RL +/- RR +/-
CN792
8.5V
REG
Q390~392
BATT IN
E-6772Db
Q705
8V REG
IC901
-10V REG
Q706
8V REG
CN702
CN703
AUDIO 8V
-10V
PACK 8V
IC902
REG
AUDIO -8V
Q701, 702
REG
+B 5V
VDD 5V
BATT
DVD 5V
COOLING FAN
IC704
REG
DAC D5V
IC731
REG
10V
IC703
REG
DAC A5V
Q733, 734
ON/OFF DRIVE
2.5V
Q731, 732
ON/OFF DRIVE
DAC 5V
IC733
DC/DC CONV CNT
5V
IC732
REG
3.3V
DAC 5V
DAC 3.3V
CN731
To DVD Deck E-8913 CN701
IC602
SUB u-COM
V DATA
V LRCK
V BCLK
IC820
VOICE D/A CONV
ADPCM
SUB DATA
SUB COM
SUB CLK
SUB CE
SUB RST
IC601
MAIN u-COM
DVD CNT
P CNT
VTR CNT
AJ795
PWR CNT
Q724, 725
CN151
VIDEO OUT
IC151
VIDEO SW
V SEL 1, 2
SUB ON
VDD 5V
PWR CNT
Q651, 652
SUB 5V
IC404
L+R
IC403
AMP
MUTE
PRO MUTE
Q206, 207
Q266, 267
IC305
SOURCE SELECT
RL ,RR
IC306
AMP
Q720, 721
PWR CNT
Q722, 723
PWR CNT
ANT CNT
ILL
PKB
CH 1/2
NAVI MUTE
Q682
Q681
Q610
ILLM
IC690
BATT/ ACC CHECK
BATT SENS
ACC SENS
RESET
ACC
CN701
Q201~203 Q301~303
MUTE
CN201
PRE OUT (REAR)
FL
FR
Q650
AFM F
Q251~253, Q351~353
MUTE
CN301
PRE OUT (FRONT)
RL
RR
Q654
AFM R
Q211, 212
LPF SEL
IC203
IC303
LPF CNT
PD, CCLK, CDTI, CS
IC801
AUDIO DAC (DVD)
SDTI 1
SDTI 2
SDTI 3
DACL, R
SL, SR
SW(DVD)
CEN(DVD)
IC201
IC301
AMP
IC202
IC302
LPF
IC251
IC252
IC401(a)
IC402(a)
IC401(b)
IC402(b)
DB DATA, CLK, REQ
IC802
SROUND DECODE
L, R
LT, RT
SL, SR
VR SW
SW
CEN
SL, SR VOL
Q406, 407
MUTE
IC406(a)
AMP
Q401~403
MUTE
CN260
SUB WOOFER OUT
L
R
Q655
AFM W
Q456, 457
MUTE
IC406(b)
AMP
Q451, 452, 454
MUTE
CN401
CENTER OUT
DVD VIDEO
HRESET
SLEEP
MODE
DVD TX
RX
Q600, 601
DVD RX
SDTI 1~3
MCLK
LRCLK
BICK
SMUTE
RESET
DZF
Q453, 455
MUTE
IC451
AUDIO AMP
C SP+
+B 5V
C SP OP/CL
CENT MUTE
Q656
IC705
MOTOR DRIVE
CM 1, 2
CN602
CN590
CN591
E-8774Ac
S PEAKER BLOCK Assy
SP
M
IC605
REG
B 3.3V
VDD 5V
CN507
BATT
PWR CNT
Q735, 736
C SW B
DIM 1, 2
Q711, 712
DIMMER CONT
INT CNT
BATT
PWR CNT
Q703, 704
CH SW B
IC510
REG
ILL 9V
Q708
REG
SW 5V
BATT
DIMMER REG
IC701
INV 10V
ILL 9V
+B 5V
LCD DI, DO, CLK, CE
PNL SENS
REM IN
CN605
EJE ILL
S LED
DVD EJE
RESET
ILL 9V
+B 5V
CN604
FP M1, 2
Q739, 740
MOTOR CNT
IC706
MOTOR DRIVE
PWR CNT
Q715, 716
BATT
VOLT CLT
Q718, 719
V CNT 1, 2
FP OP/CL
+B 5V
FM OUT1, 2
CN603
E-8770B
LCD901
LCD
IC901
LCD DRIVE
LCD DO, DI CLK, CE
Q931, 932
CFL DRIVE
CFL931
Q901
D921~928, 930
KEY MATORIX
VDD
POWER SW
Q902, 903
IC902
IR RECEIVE
D920
SW 9V
VDD
INV 10V
SW 8V
MUTE SW
PANEL
RM DATA
CN504
CN901
CN901
E-8774Ad
CP501
Q582
D584
SW580 RESET
SW582 CD/DVD
Q581
D581, 583
E-8774Ab
CN508
(CLOSE)
(OPEN)
OUT 1, 2
E-8775A
CN598
M

CN51 (MAIN ANT)
CN252 AUX IN L R
CN251 CH-C IN L R
E-6772Da
E-6772Db
E-8772D
CD-C CONTROL
CN506
(CN506)
CH SW-B
IC501
BUS I/F
CH DATA
CH CLK
CH STB
CH RM
CH SENS
PA51
AM
FM
FM/AM TUNER L,R
Q261,62
AM/FM
SD,ST
PLL DO,DI,CLK,CE
IC205
SOURCE SELECT
TU L,R
CH C L,R
AUX L,R
DVD L,R
IC204,254
SEL
Q204
DB ON/OFF
SDA1
IC206
AMP
FL,FR
RL,RR
AMP CNT
STANDBY
CN1940
IC292,293
IC291
POWER AMP
FL +/-
FR +/-
RL +/-
RR +/-
CN1921
Q390-392
8.5V
REG
BATT IN
Q720,721
PWR CNT
AMP
Q722,723
ANT
ANT CNT
ILL
ILLM
Q682
Q681
PKB
Q610
CH 1/2
NAVI MUTE
IC690
BATT/ ACC CHECK
BATT SENS
ACC SENS
RESET
ACC
CN701
Q201-203,301-303
MUTE
AFM F
Q650
CN201
PRE OUT (FRONT)
FL
FR
Q251-253, Q351-353
CN301
PRE OUT (REAR)
RL
RR
AFM R
Q654
Q401-403
CN260
SUB WOOFER OUT
L
R
AFM W
Q655
Q451,452,454
CN401
CENTER OUT.
E-8774Ac
SPEAKER BLOCK Ass'y
SP
M
IC451
AUDIO AMP
C SP
+8SV
C SP OP/CL
IC705
MOTOR DRIVE
CM 1,2
CN602
CN590
CN591
Q453,455
CENT MUTE
Q656
Q456,457
IC406(a)
IC406(b)
Q406,407
IC305
SOURCE SELECT
RL,RR
IC306
AMP
IC820
VOICE D/A CONV
V DATA
V LRCK
V BCLK
ADPCM
IC602
SUB μ-COM
SUBDATA
SUB COM
SUB CLK
SUB CE
SUB RST
IC601
MAIN μ-COM
DVD CNT
VTR CNT
P CNT
IC603
IC604
L+R
Q206,207
Q266,267
PRO MUTE
IC801
AUDIO DAC (DVD)
SDTI1
SDTI2
SDTI3
DAC L,R
SL,SR
SW(DVD)
CEN(DVD)
IC201
IC301
IC202
IC302
IC251
IC252
IC401(a)
IC402(a)
IC401(b)
IC402(b)
AMP
LPF
LPF CNT
Q211,212
LPF SEL
SUB ON
PWR CNT
Q651,652
+8SV
SUBSV
PD,CCLK CDTI,CS
DZF
L,R
LT,RT
SL,SR VOL
VR SW
SW
CEN
SOUND DECODE
DB MUTE,CLK,FREQ
RESET
MCLK
LRCLK
BICK
SMUTE
DVD TX
RX
DVD RX
Q600,601
DVD VIDEO
HRESET
SLEEP
MODE
To DVD Deck E-8913 CN701
To DVD DECK E-8913 CN451
CN151 VIDEO OUT
IC151
VIDEO SW
V SEL 1,2
8V REG
Q705
-10V REG
IC901
Q706
IC902
REG
AUDIO-8V
PACK 8V
Q701,902
+8SV
VBB5V
CN702
CN703
COOLING FAN
IC704
BATT
DAC 8SV
IC731
10V
IC703
MC 8SV
Q733,734
ON/OFF DRIVE
2.5V
Q731,73
DVD 5V
IC733
DC/DC CONV CNT
IC732
5V
3.3V
DVD 3.3V
CN731
AJ795
Q724,725
IC605
B 3.3V
VDD 5V
CN507
Q735,736
C SW B
Q703,704
CH SW B
IC510
ILL 9V
Q708
SW5V
Q711,712
DIM 1,2
DIMMER CONT
INT CNT
DIMMER REG
IC701
INV 10V
ILLI
+8SV
LCD DI, DO, CLK, CE
PWL SENS
REM IN
EJE ILL
S LED
DVD EJE
RESET
ILLUM
FP M1,2
Q739,740
MOTOR CNT
IC706
MOTOR DRIVE
VOLT CLT
VCNT 1,2
Q718,719
FP OP/CL
PM OUT 1,2
Q715,716
CN805
CN804
CN803
CN504
CN901
CN508
(CLOSE)
(OPEN)
OUT 1,2
CN598
E-8715A
CP501
Q582
D584
SW580 RESET
SW582 CD/DVD EJ
Q581
D581,583
LCD901
LCD
IC901
LCD DRIVE
LCD DO,DI, CLK,CE
Q931,932
CFL DRIVE
CFL931
D921-926,930
Q901
KEY MATRIX
VDD
POWER SW
Q902,903
IC902
IR RECEIVE
D920
SW9V
MUTE 9V
PANEL
RM DATA
E-8770B
E-8774Ad
E-8774Ab
CQ-DVR909U 2000.06.13

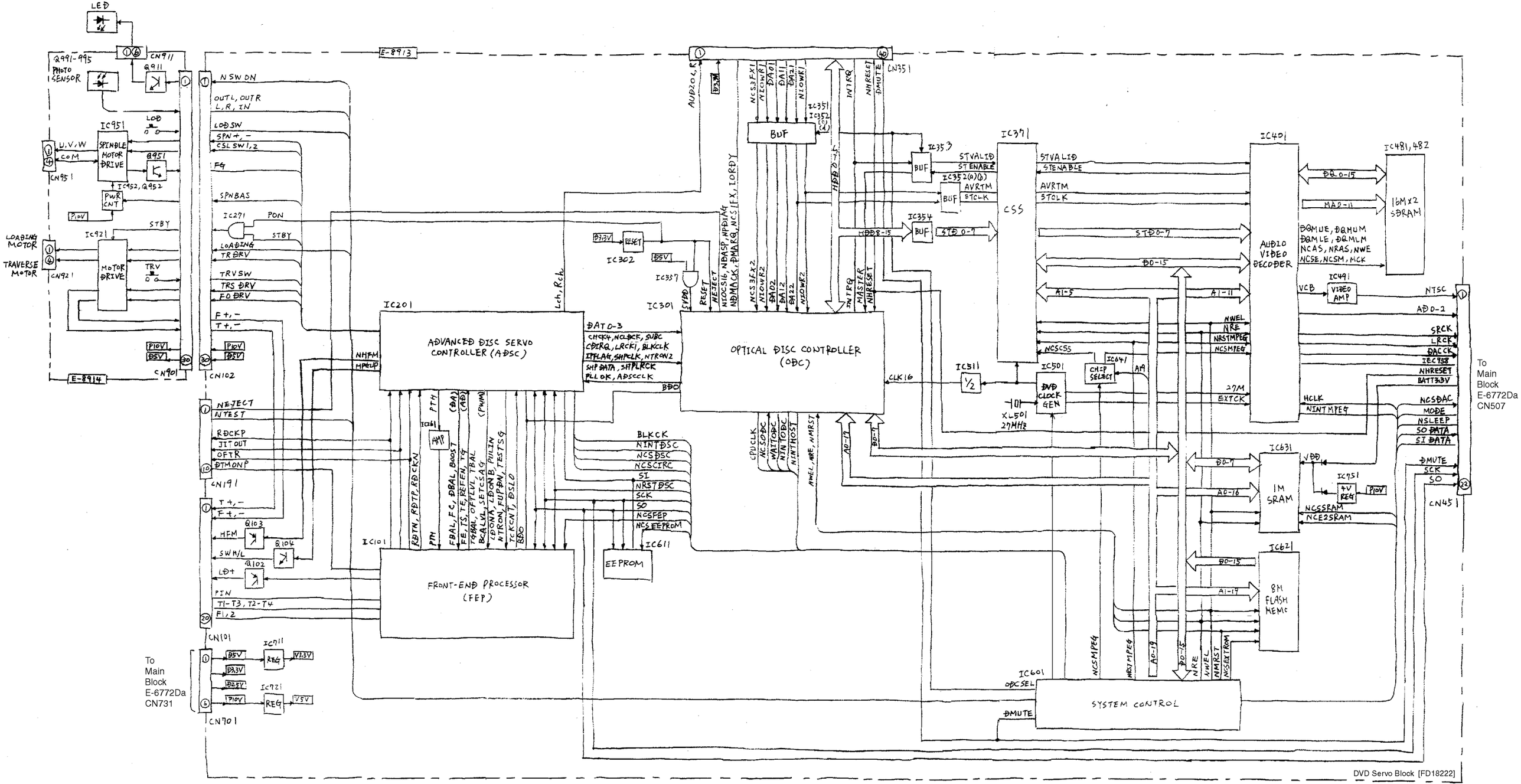

DVD Servo Block [FD18222]

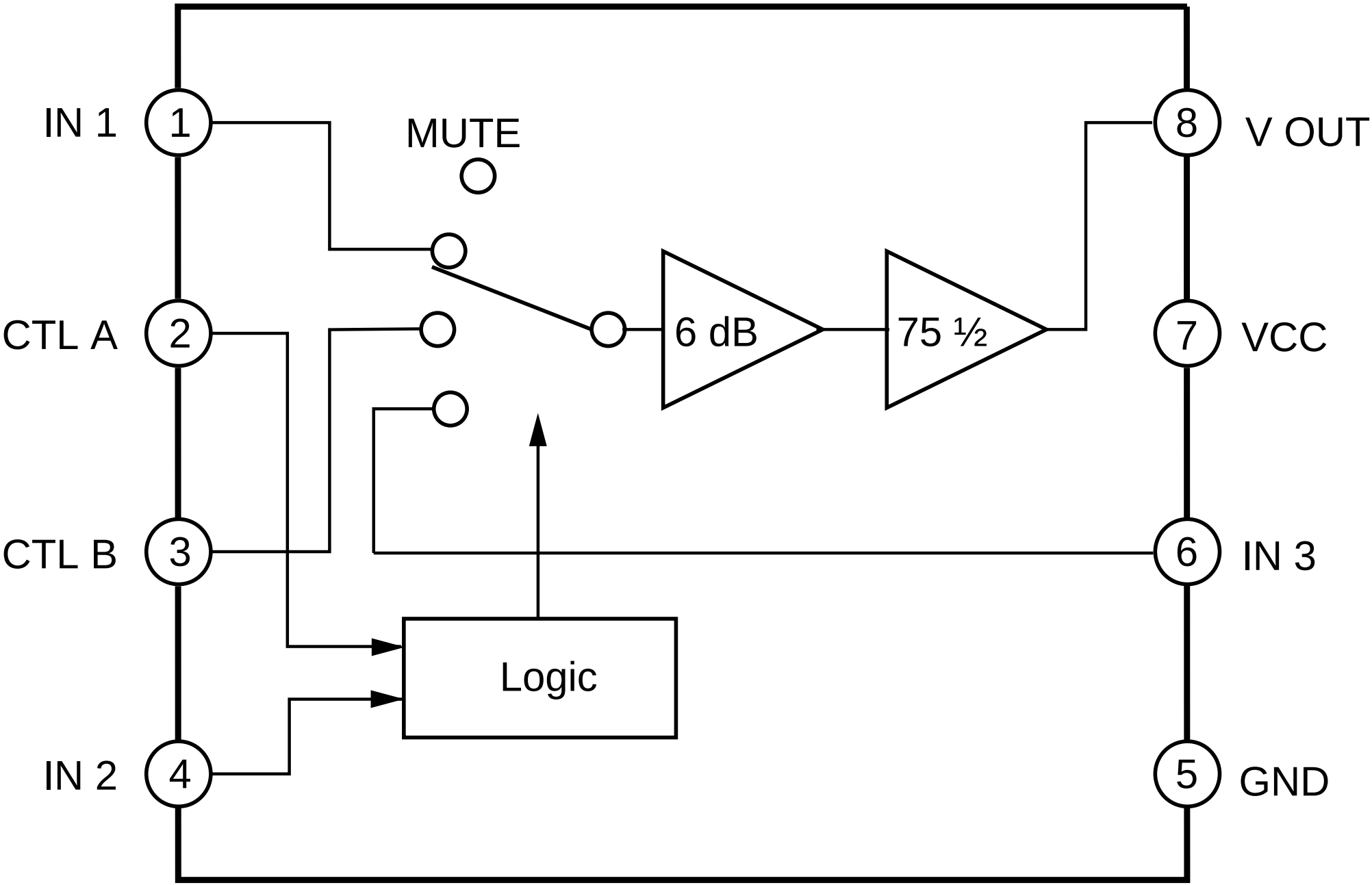
IN 1
1
MUTE
8
V OUT
CTL A
2
6 dB
75 ½
7
VCC
CTL B
3
6
IN 3
Logic
IN 2
4
5
GND

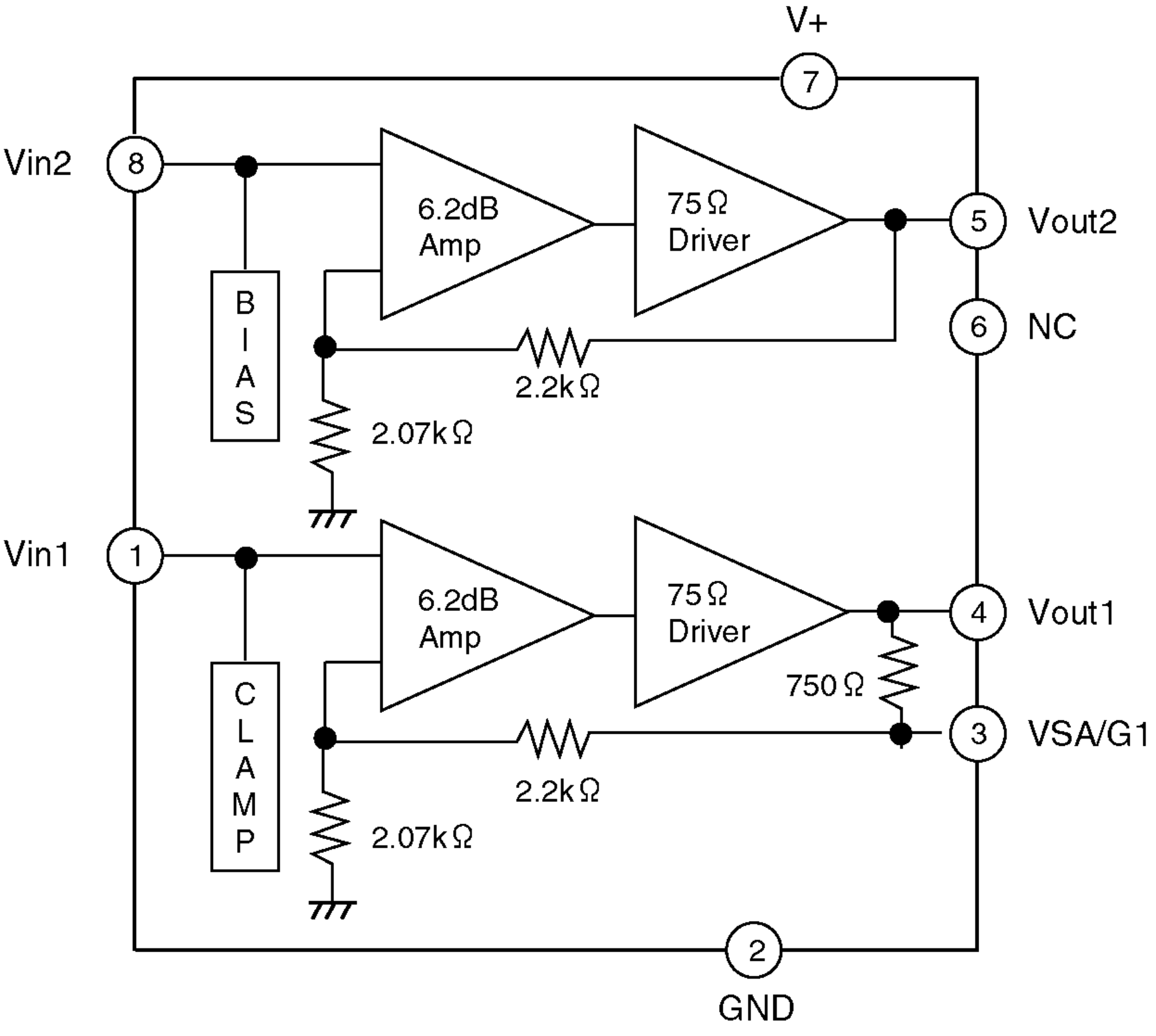
V+
7
Vin2
8
6.2dB
Amp
75Ω
Driver
5
Vout2
BIAS
6
NC
2.2kΩ
2.07kΩ
Vin1
1
6.2dB
Amp
75Ω
Driver
4
Vout1
750Ω
CLAMP
3
VSA/G1
2.2kΩ
2.07kΩ
2
GND

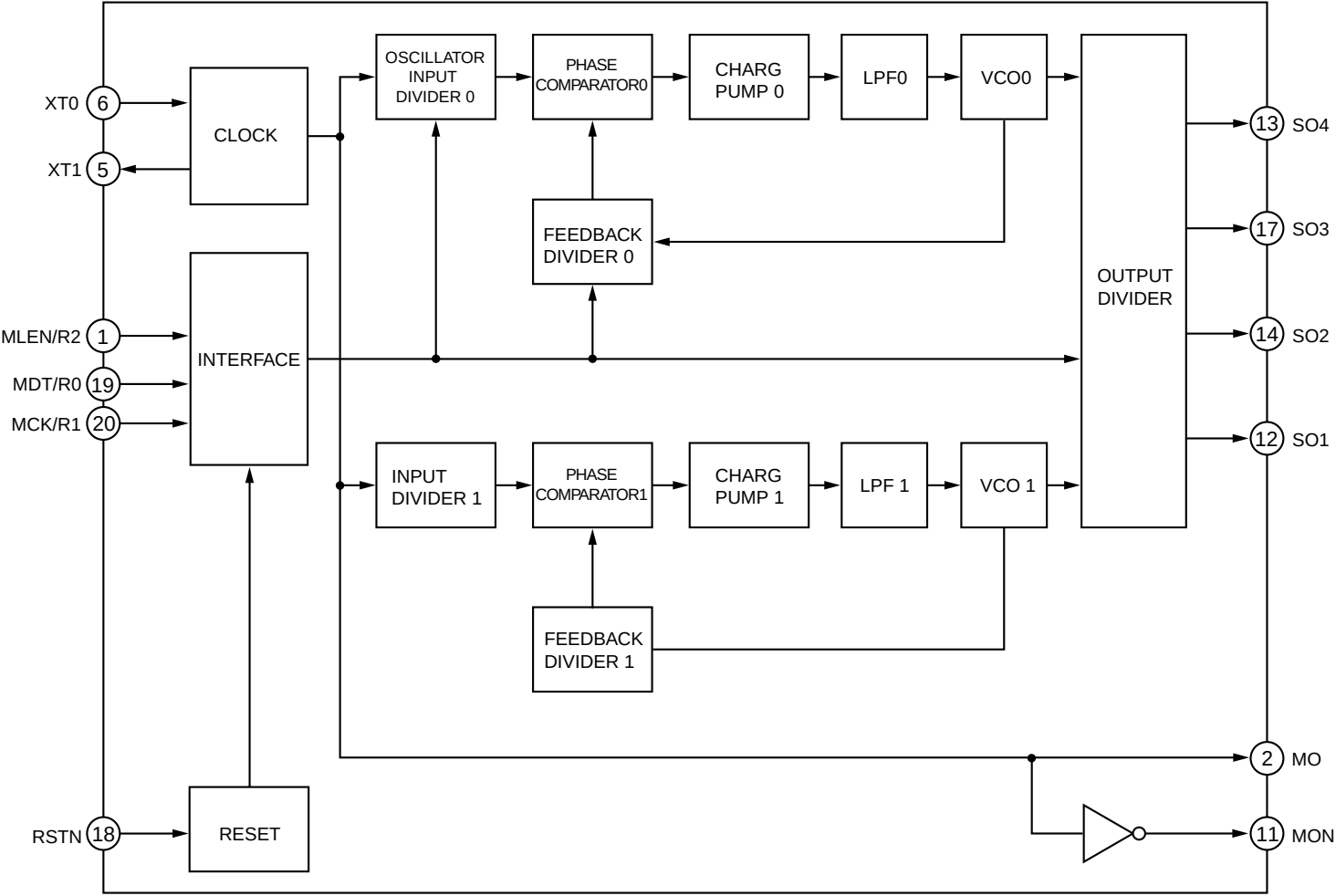
XT0
6
XT1
5
CLOCK
OSCILLATOR INPUT DIVIDER 0
PHASE COMPARATOR0
CHARG PUMP 0
LPF0
VCO0
FEEDBACK DIVIDER 0
OUTPUT DIVIDER
13
SO4
17
SO3
14
SO2
12
SO1
MLEN/R2
1
MDT/R0
19
MCK/R1
20
INTERFACE
INPUT DIVIDER 1
PHASE COMPARATOR1
CHARG PUMP 1
LPF 1
VCO 1
FEEDBACK DIVIDER 1
2
MO
11
MON
RSTN
18
RESET

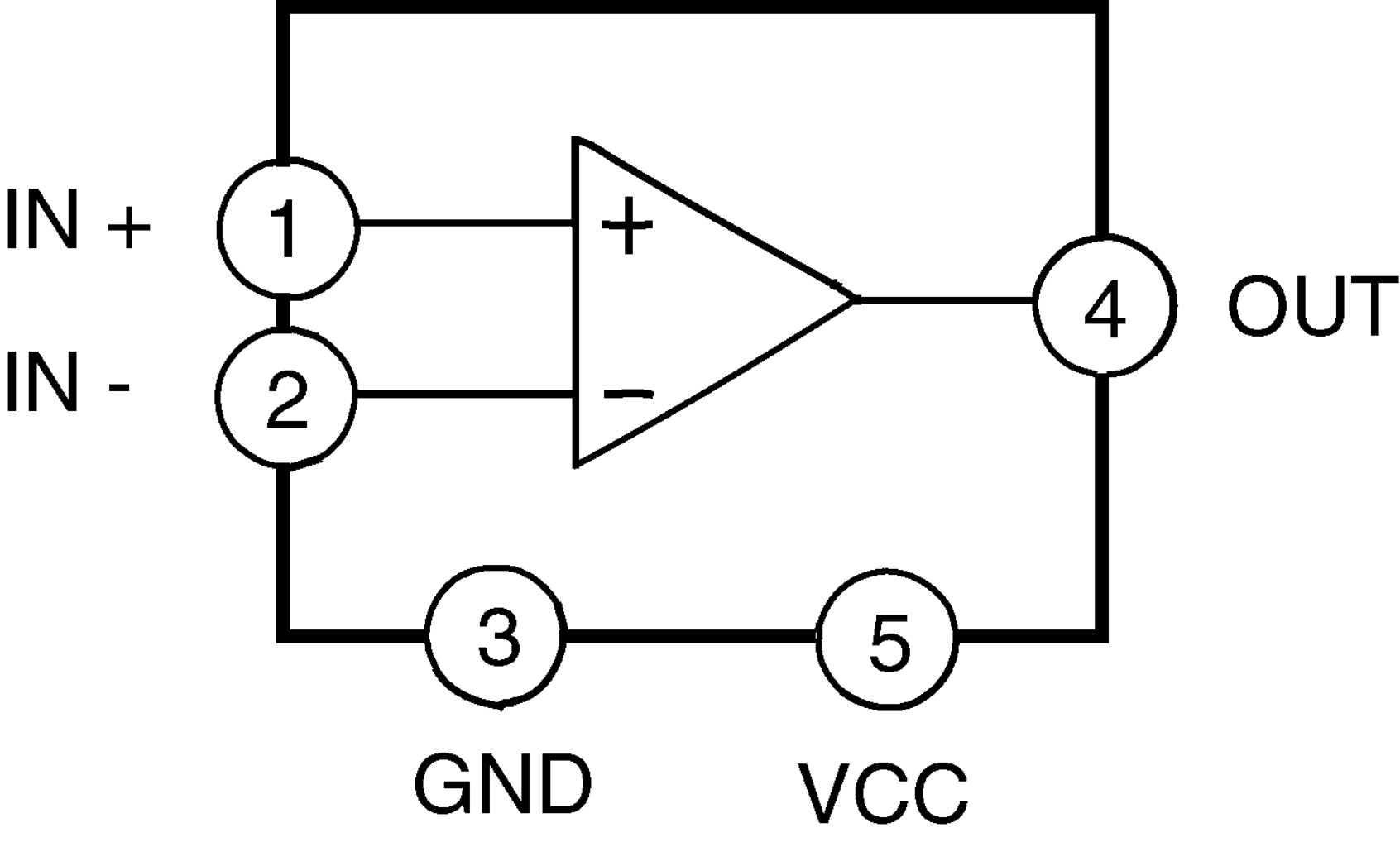
IN +
IN -
1
2
3
5
4
+
−
OUT
GND
VCC

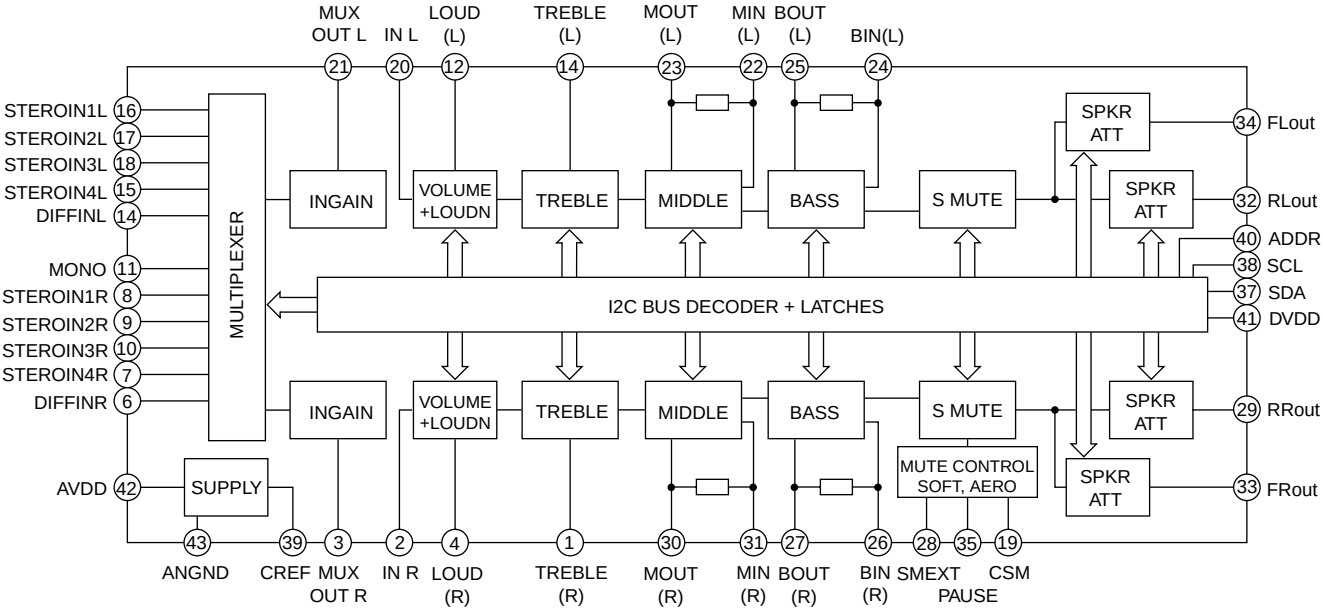
MUX OUT L
IN L
LOUD (L)
TREBLE (L)
MOUT (L)
MIN (L)
BOUT (L)
BIN(L)
21
20
12
14
23
22
25
24
STEROIN1L 16
STEROIN2L 17
STEROIN3L 18
STEROIN4L 15
DIFFINL 14
MONO 11
STEROIN1R 8
STEROIN2R 9
STEROIN3R 10
STEROIN4R 7
DIFFINR 6
AVDD 42
MULTIPLEXER
INGAIN
VOLUME +LOUDN
TREBLE
MIDDLE
BASS
S MUTE
SPKR ATT
SPKR ATT
SPKR ATT
I2C BUS DECODER + LATCHES
INGAIN
VOLUME +LOUDN
TREBLE
MIDDLE
BASS
S MUTE
SPKR ATT
SPKR ATT
MUTE CONTROL SOFT, AERO
SUPPLY
34 FLout
32 RLout
40 ADDR
38 SCL
37 SDA
41 DVDD
29 RRout
33 FRout
43
39
3
2
4
1
30
31
27
26
28
35
19
ANGND
CREF
MUX OUT R
IN R
LOUD (R)
TREBLE (R)
MOUT (R)
MIN (R)
BOUT (R)
BIN (R)
SMEXT
PAUSE
CSM

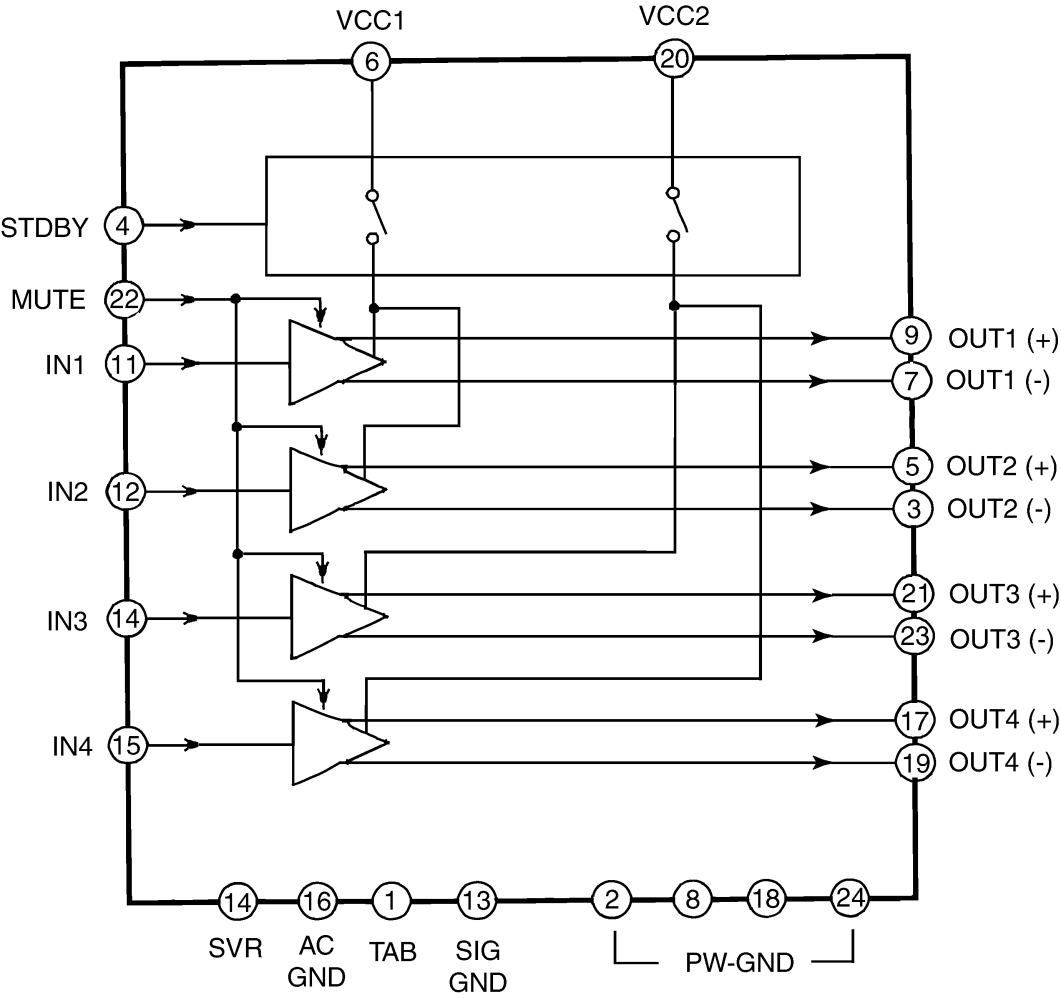
VCC1
6
VCC2
20
STDBY
4
MUTE
22
IN1
11
IN2
12
IN3
14
IN4
15
9
OUT1 (+)
7
OUT1 (-)
5
OUT2 (+)
3
OUT2 (-)
21
OUT3 (+)
23
OUT3 (-)
17
OUT4 (+)
19
OUT4 (-)
14
SVR
16
AC GND
1
TAB
13
SIG GND
2
8
18
24
PW-GND

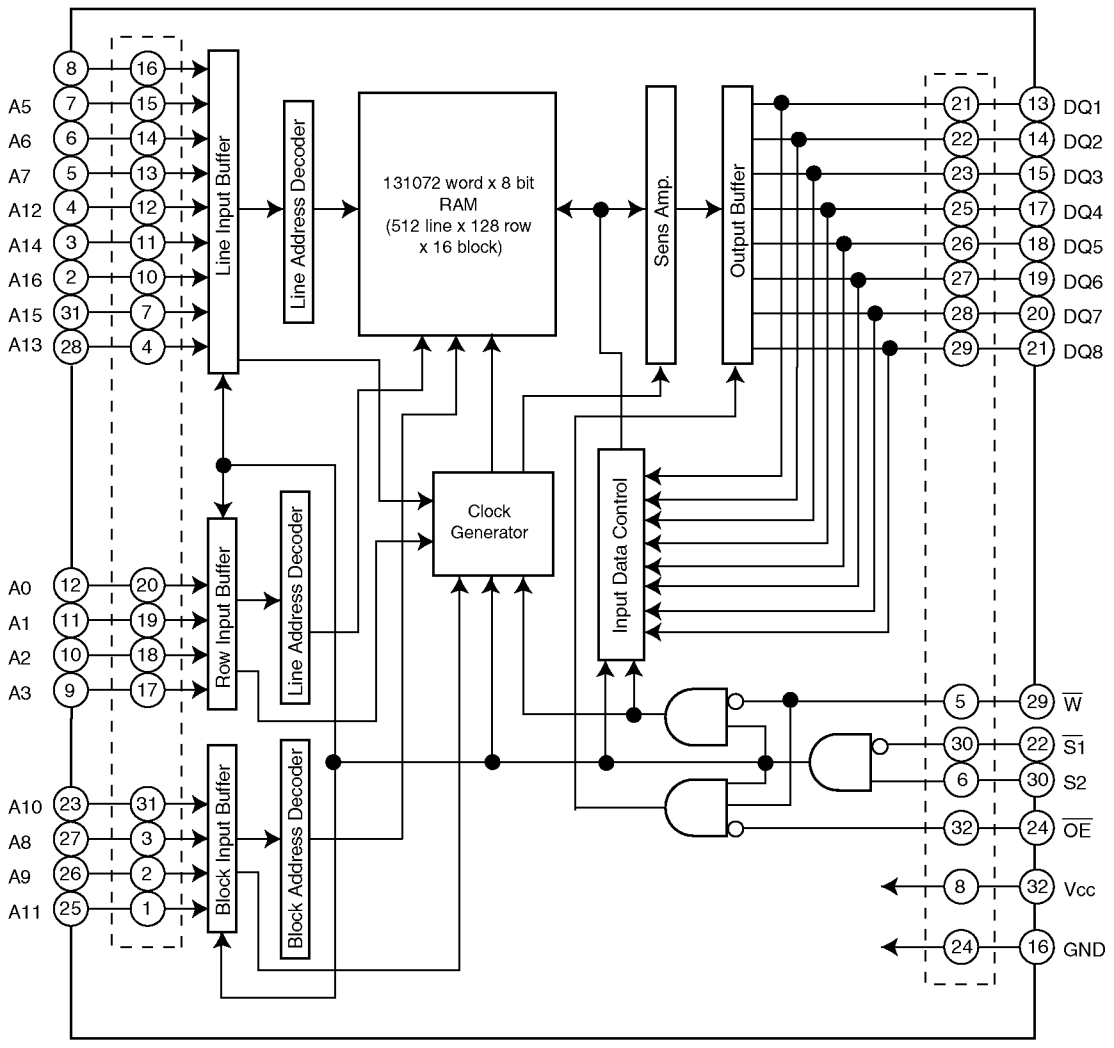
131072 word x 8 bit
RAM
(512 line x 128 row
x 16 block)
Line Input Buffer
Line Address Decoder
Sens Amp.
Output Buffer
Clock
Generator
Input Data Control
Row Input Buffer
Line Address Decoder
Block Input Buffer
Block Address Decoder
A5
A6
A7
A12
A14
A16
A15
A13
A0
A1
A2
A3
A10
A8
A9
A11
DQ1
DQ2
DQ3
DQ4
DQ5
DQ6
DQ7
DQ8
W
S1
S2
OE
Vcc
GND

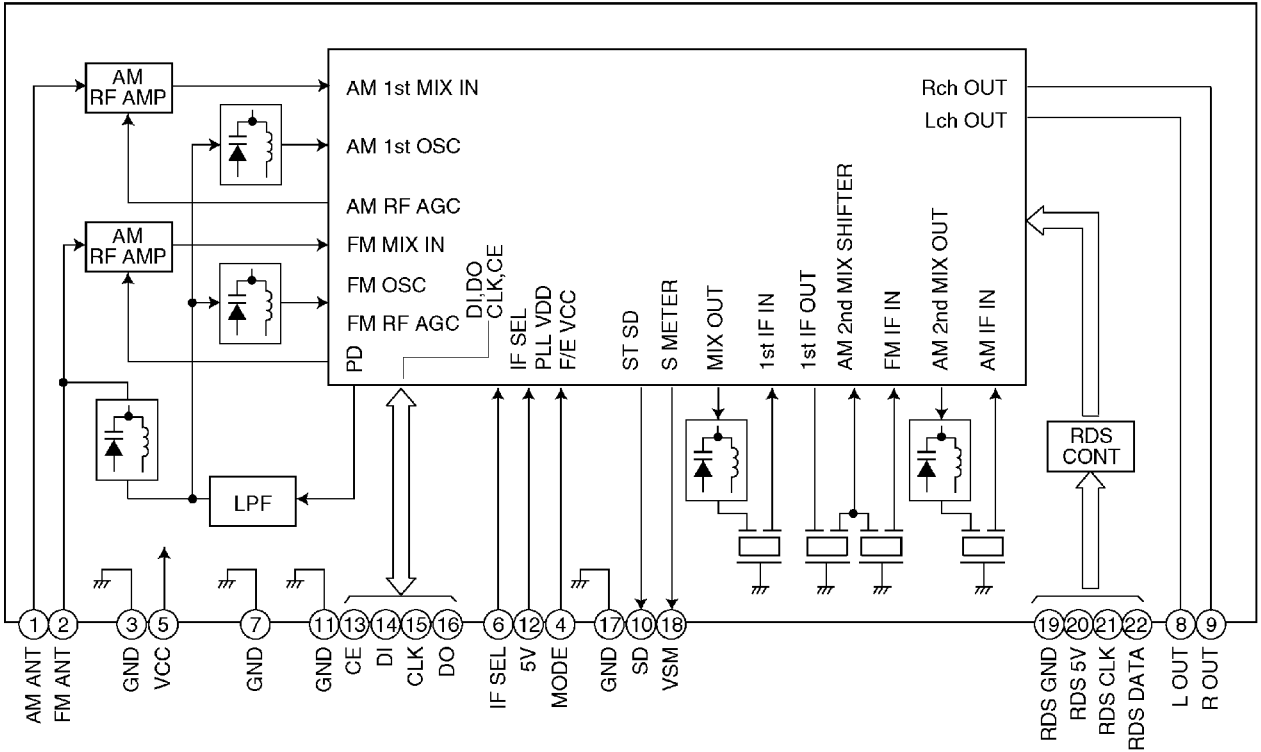
AM RF AMP
AM RF AMP
LPF
AM 1st MIX IN
AM 1st OSC
AM RF AGC
FM MIX IN
FM OSC
FM RF AGC
PD
DI,DO
CLK,CE
IF SEL
PLL VDD
F/E VCC
ST SD
S METER
MIX OUT
1st IF IN
1st IF OUT
AM 2nd MIX SHIFTER
FM IF IN
AM 2nd MIX OUT
AM IF IN
Rch OUT
Lch OUT
RDS CONT
1 AM ANT
2 FM ANT
3 GND
5 VCC
7 GND
11 GND
13 CE
14 DI
15 CLK
16 DO
6 IF SEL
12 5V
4 MODE
17 GND
10 SD
18 VSM
19 RDS GND
20 RDS 5V
21 RDS CLK
22 RDS DATA
8 L OUT
9 R OUT

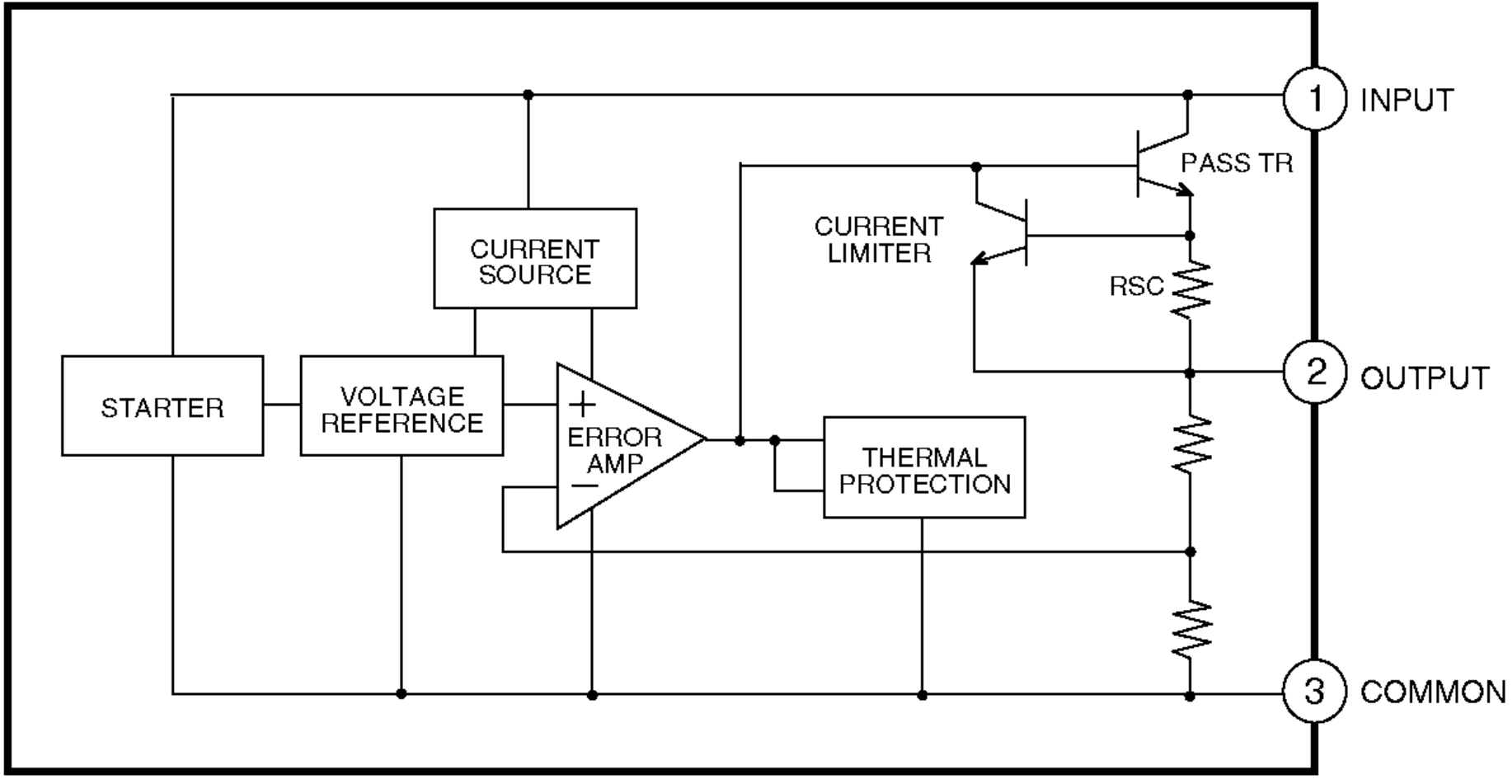
1
INPUT
PASS TR
CURRENT
LIMITER
CURRENT
SOURCE
RSC
2
OUTPUT
STARTER
VOLTAGE
REFERENCE
+
ERROR
AMP
−
THERMAL
PROTECTION
3
COMMON

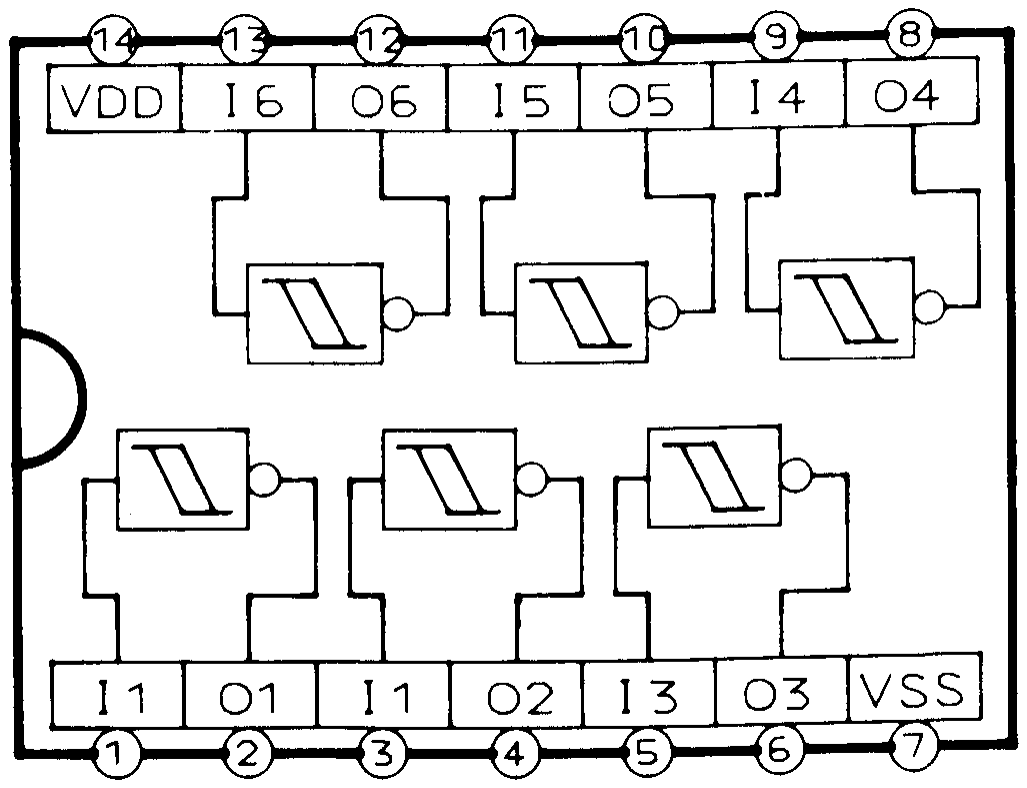
14
13
12
11
10
9
8
VDD
I6
O6
I5
O5
I4
O4
I1
O1
I1
O2
I3
O3
VSS
1
2
3
4
5
6
7

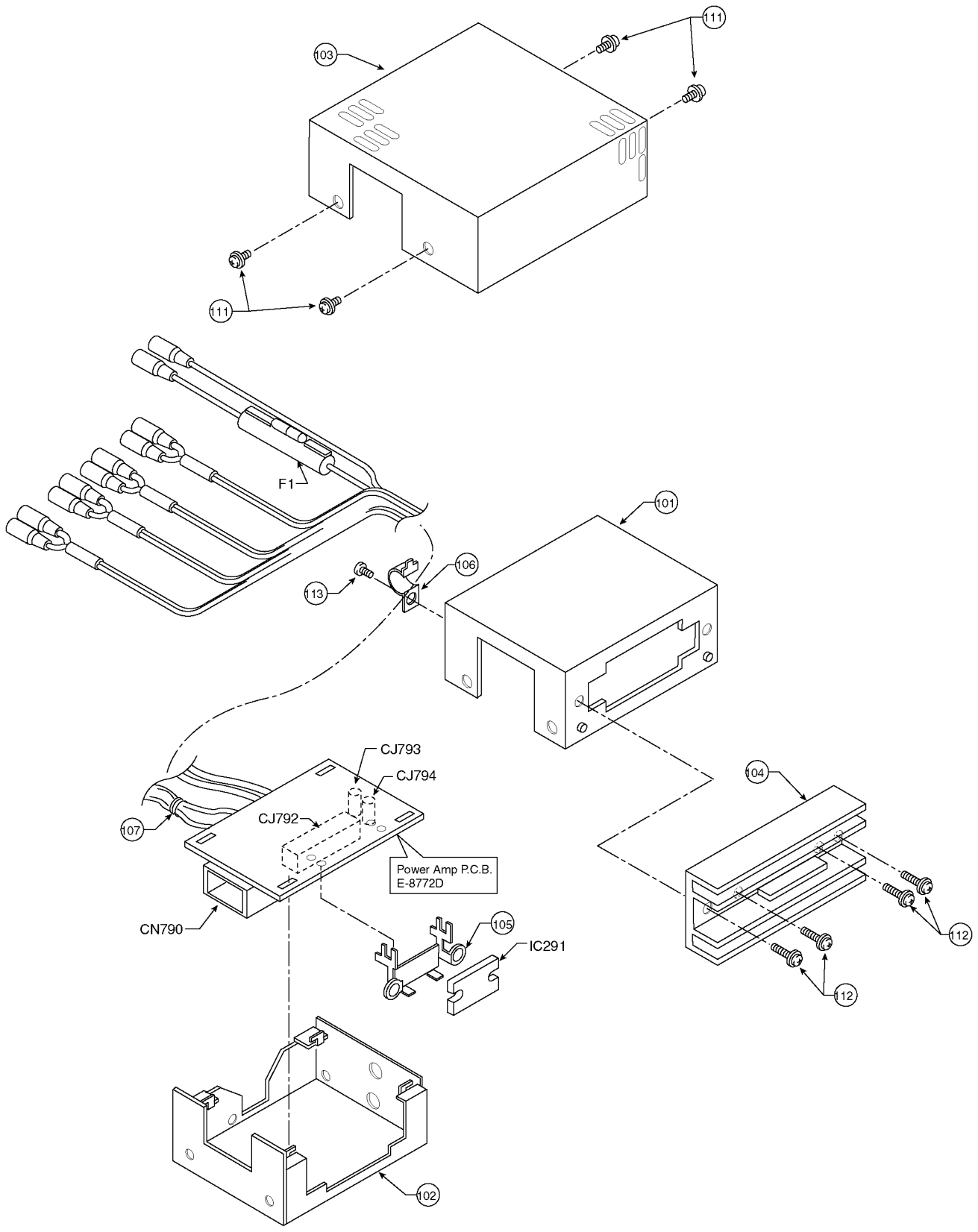
111
103
111
F1
101
106
113
CJ793
CJ794
CJ792
107
Power Amp P.C.B.
E-8772D
104
112
112
CN790
105
IC291
102

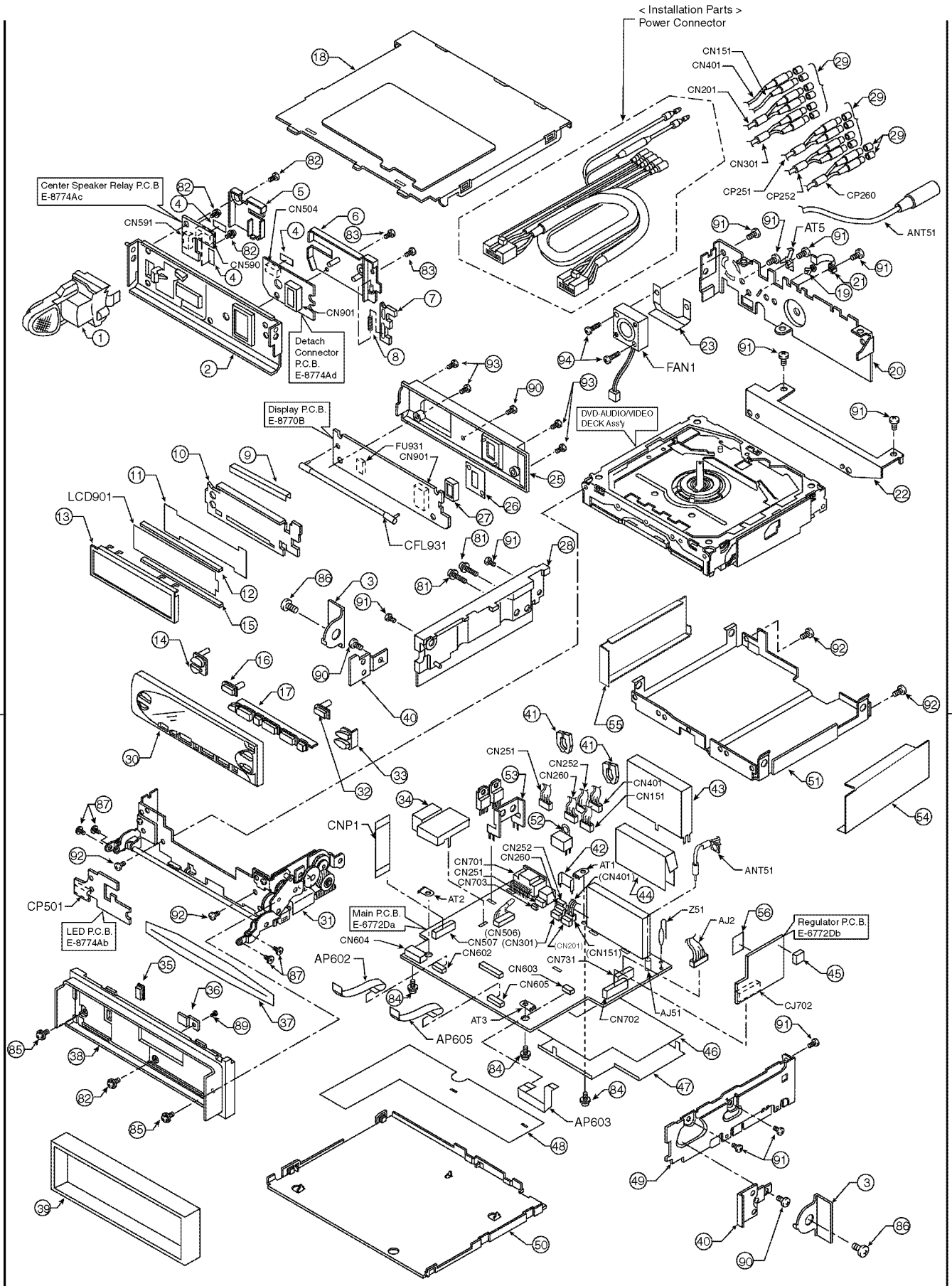
< Installation Parts >
Power Connector
Center Speaker Relay P.C.B
E-8774Ac
Detach
Connector
P.C.B.
E-8774Ad
Display P.C.B.
E-8770B
DVD-AUDIO/VIDEO
DECK Ass'y
LED P.C.B.
E-8774Ab
Main P.C.B.
E-6772Da
Regulator P.C.B.
E-6772Db
CN151
CN401
CN201
CN301
CP251
CP252
CP260
ANT51
AT5
FAN1
CN504
CN590
CN591
CN901
FU931
CFL931
LCD901
CNP1
CP501
CN701
CN703
CN731
AT1
AT2
Z51
AJ2
AJ51
CJ702
CN602
CN603
CN604
CN605
CN702
CN506
CN507
AP602
AP603
AP605
2
1
A
B

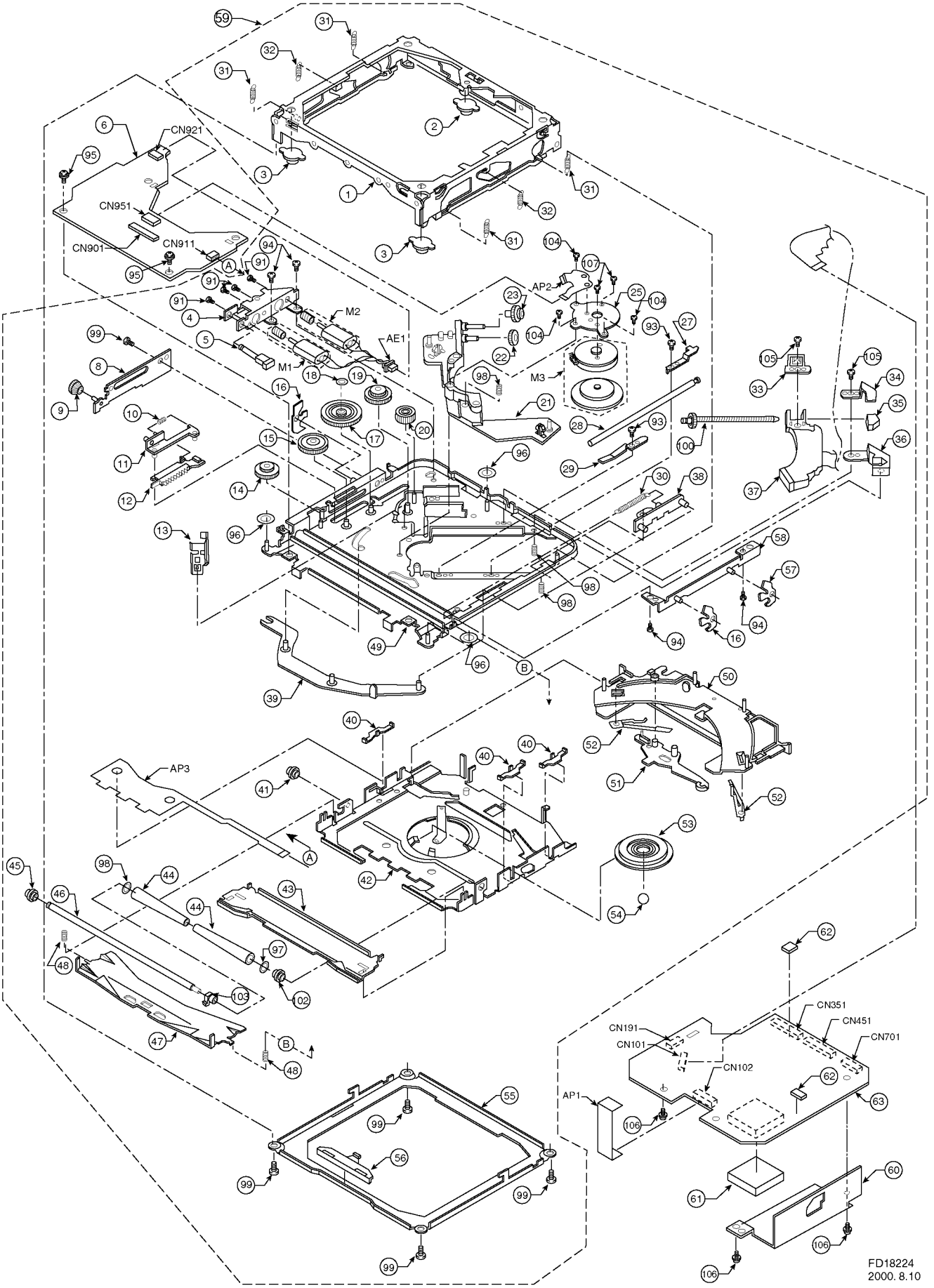
CN921
CN951
CN901
CN911
M2
M1
AE1
M3
AP2
AP3
CN351
CN451
CN701
CN191
CN101
CN102
AP1
FD18224
2000. 8.10

2 2

1 1

A B

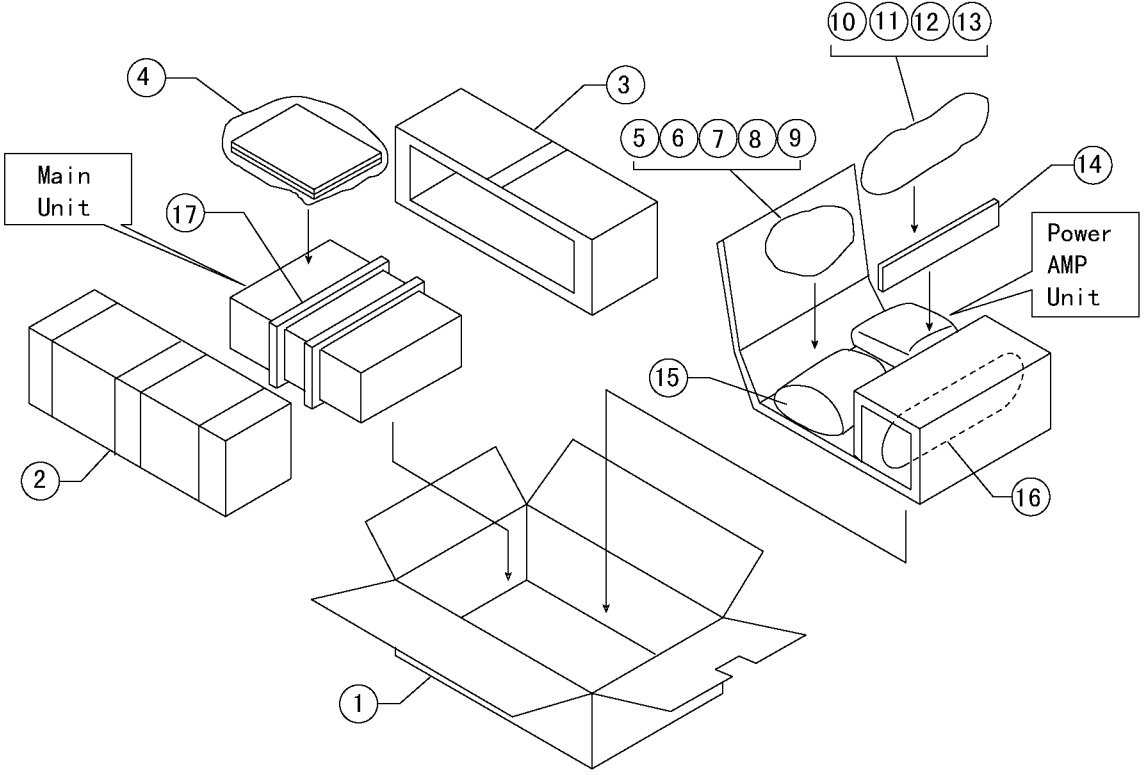
10 11 12 13
4
3
5 6 7 8 9
14
Main Unit
17
Power AMP Unit
15
2
16
1

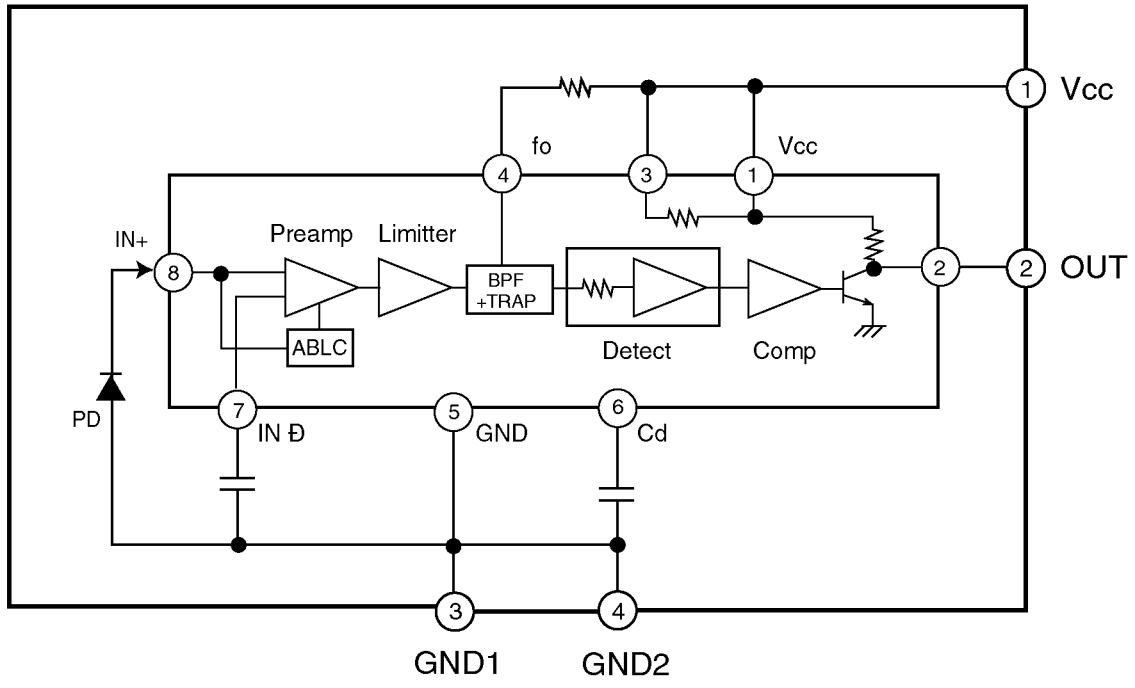
1
Vcc
fo
4
3
Vcc
1
IN+
8
Preamp
Limitter
BPF
+TRAP
2
2
OUT
ABLC
Detect
Comp
PD
7
IN Đ
5
GND
6
Cd
3
4
GND1
GND2

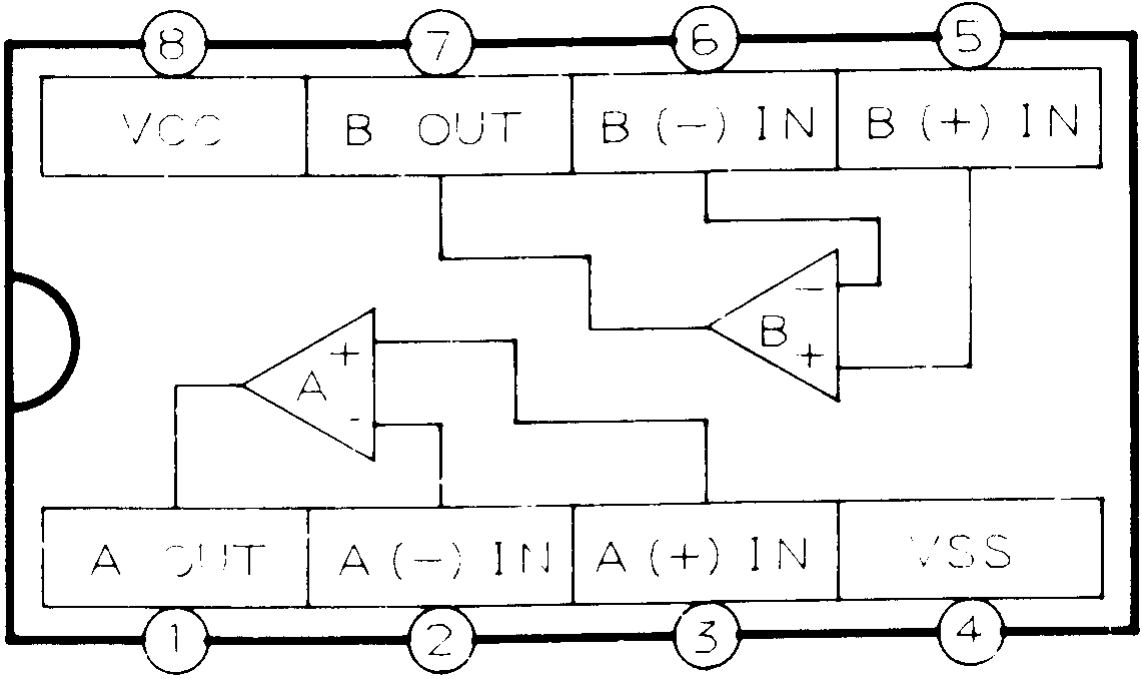
8
7
6
5
VCC
B OUT
B (−) IN
B (+) IN
B
A
A OUT
A (−) IN
A (+) IN
VSS
1
2
3
4

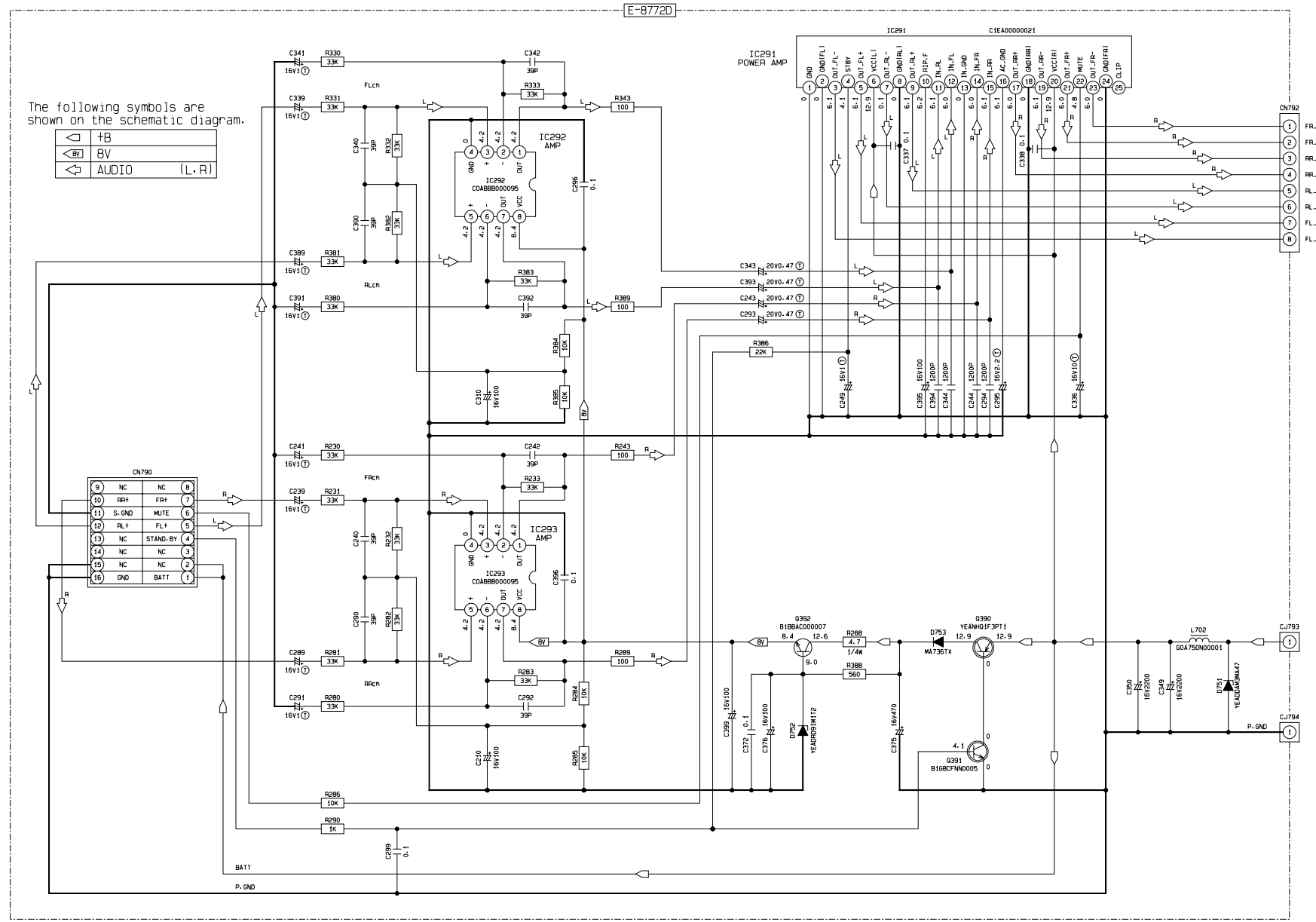
The following symbols are shown on the schematic diagram.
+B
8V
AUDIO (L.R)
IC291
C1EA00000021
IC291 POWER AMP
GND
GND(FL)
OUT-FL-
STBY
OUT-FL+
VCC(L)
OUT-AL-
GND(AL)
OUT-AL+
RIP.F
IN-AL
IN-FL
IN-GND
IN-FR
IN-AR
AC-GND
OUT-AR+
GND(AR)
OUT-AR-
VCC(R)
OUT-FR+
MUTE
OUT-FR-
GND(FR)
CLIP
CN792
FR-OUT-
FR-OUT+
RR-OUT-
RR-OUT+
RL-OUT+
RL-OUT-
FL-OUT+
FL-OUT-
IC292
AMP
IC292
C0ABBB000095
IC293
AMP
IC293
C0ABBB000095
FLch
RLch
FRch
RRch
CN790
NC
RR+
S.GND
RL+
NC
NC
GND
FR+
MUTE
FL+
STAND-BY
NC
BATT
Q392
B1BBAC000007
Q390
YEANHQ1F3PT1
D753
MA736TX
R288
4.7
1/4W
R388
560
L702
GOA750N00001
CJ793
CJ794
P.GND
Q391
B1GBCFNN0005
D752
YEADR5M172
D751
YEADAM5M47
BATT
P.GND

E-8913

To Optical Pick-up Ass'y

CN101

IC201 ADVANCED DISC SERVO CONTROLLER(ADSC)

IC261 AMP

IC104 FRONT-END PROCESSOR (FEP)

IC101 ANB706FHQ-Y

IC201 MN677031CA1

IC271 AND

To Servo Block 3/4 (A)

To Servo Block 3/4 (B)

To Servo Block 2/4 (C)

To Servo Block 2/4 (D)

To Servo Block 2/4,3/4 (E)

To Servo Block 2/4 (F)

To Servo Block 3/4 (G)

To Servo Block 3/4 (H)

To Servo Block 3/4 (I)

To Servo Block 2/4 (J)

To Servo Block 3/4 (K)

TO E-8914 CN901

The following symbols are shown on the schematic diagram.

10V	10V
5V	5V
3.3V	3.3V

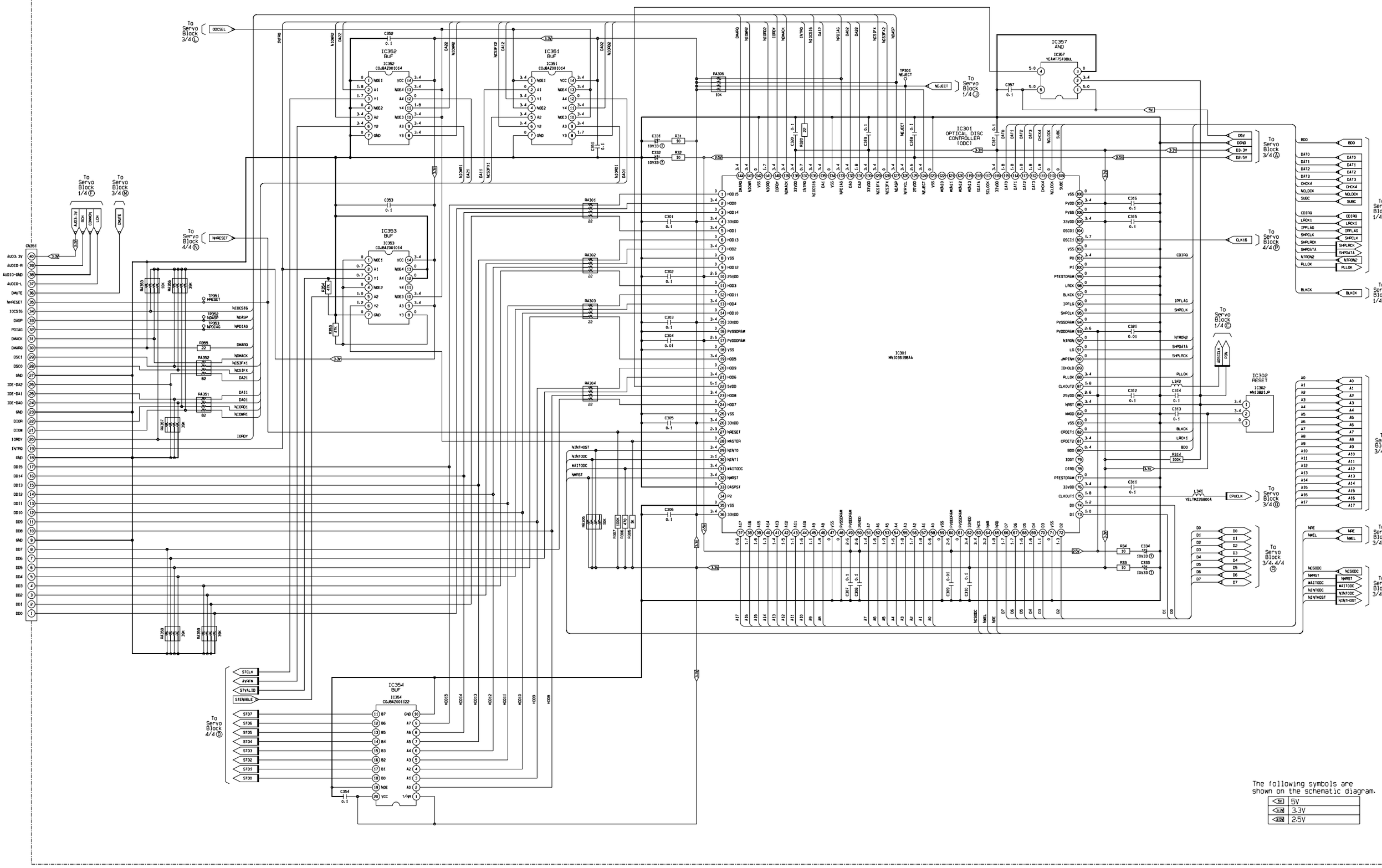
E-8913
IC352 BUF
IC351 BUF
IC353 BUF
IC354 BUF
IC357 AND
IC301 OPTICAL DISC CONTROLLER (ODC)
IC301 MN103S19BAA
IC302 RESET
To Servo Block 3/4 Ⓛ
To Servo Block 1/4 Ⓙ
To Servo Block 1/4 Ⓕ
To Servo Block 3/4 Ⓜ
To Servo Block 4/4 Ⓝ
To Servo Block 4/4 Ⓞ
To Servo Block 3/4 Ⓐ
To Servo Block 1/4 Ⓓ
To Servo Block 4/4 Ⓟ
To Servo Block 1/4 Ⓒ
To Servo Block 1/4 Ⓔ
To Servo Block 3/4 Ⓢ
To Servo Block 3/4 Ⓖ
To Servo Block 3/4 Ⓣ
To Servo Block 3/4 Ⓤ
To Servo Block 3/4, 4/4 Ⓡ
The following symbols are shown on the schematic diagram.
5V
3.3V
2.5V

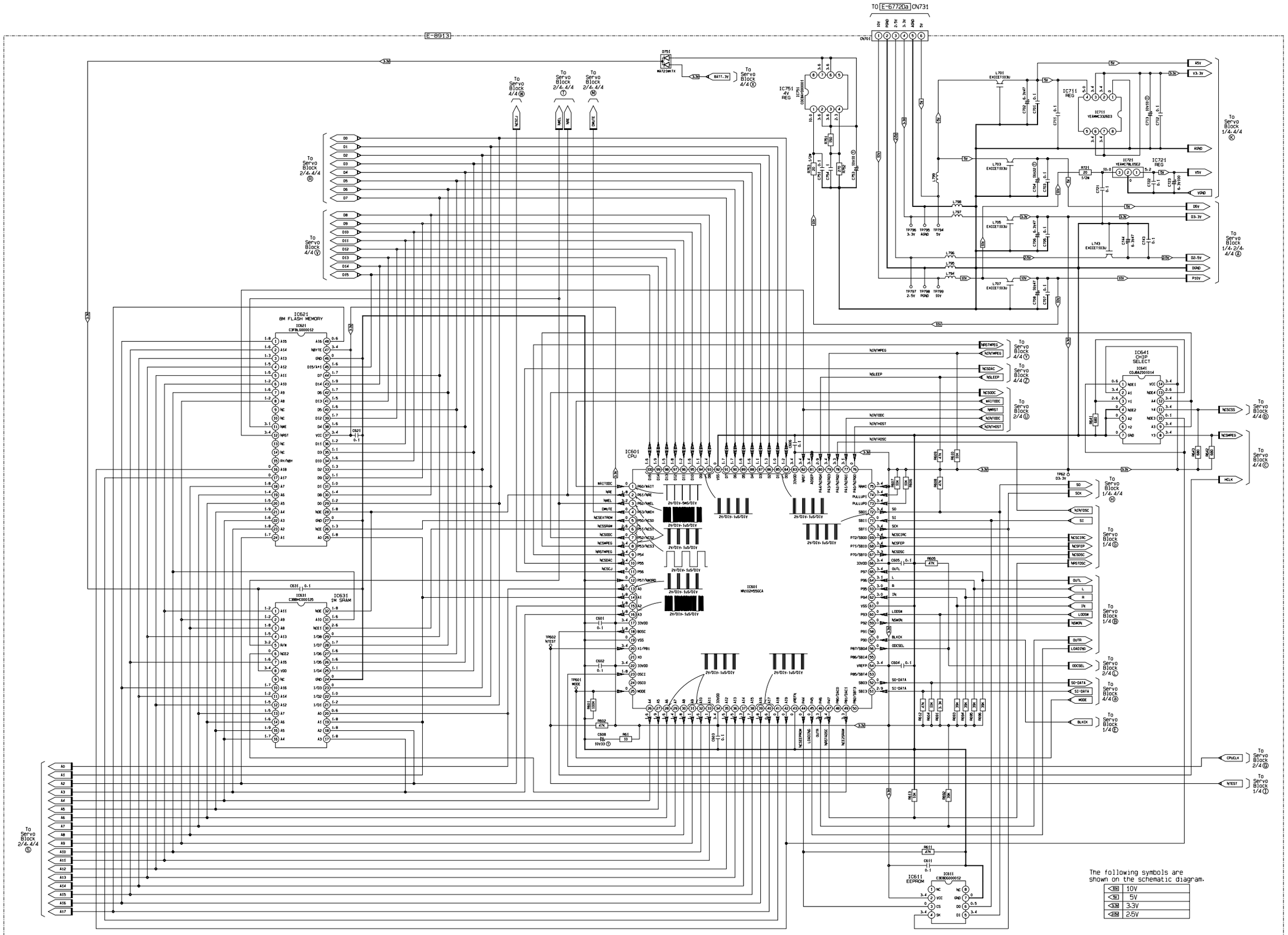
TO E-6772Da CN731
CN701
IC621
BM FLASH MEMORY
C3FBLG000012
IC631
1M SRAM
C3BBHC000125
IC601
CPU
IC641
CHIP SELECT
C0JBAZD0014
IC611
EEPROM
C3EBDG000012
IC751
4V REG
IC711
REG
IC721
REG
L701 EXCELT103J
L703 EXCELT103J
L705 EXCELT103J
L707 EXCELT103J
L743 EXCELT103J
To Servo Block 4/4 (R)
To Servo Block 2/4.4/4 (T)
To Servo Block 2/4.4/4 (M)
To Servo Block 2/4.4/4 (H)
To Servo Block 4/4 (Y)
To Servo Block 1/4.4/4 (K)
To Servo Block 1/4.2/4.4/4 (A)
To Servo Block 4/4 (V)
To Servo Block 4/4 (X)
To Servo Block 2/4 (U)
To Servo Block 4/4 (b)
To Servo Block 4/4 (C)
To Servo Block 1/4.4/4 (B)
To Servo Block 1/4 (G)
To Servo Block 1/4 (B)
To Servo Block 2/4 (L)
To Servo Block 4/4 (a)
To Servo Block 1/4 (E)
To Servo Block 2/4 (W)
To Servo Block 1/4 (I)
To Servo Block 2/4.4/4 (S)
The following symbols are shown on the schematic diagram.
10V
5V
3.3V
2.5V

The following symbols are shown on the schematic diagram.

<5V>	5V
<3.3V>	3.3V
<2.5V>	2.5V
<VISUAL>	VISUAL

IC481 16M×2 SDRAM

IC482 16M×2 SDRAM

IC501 DVD CLOCK GEN

IC511 DIVIDER

IC401 AUDIO VIDEO DECODER

IC371 CSS

IC491 VIDEO AMP

To Servo Block 3/4(B)

To Servo Block 2/4(E)

To Servo Block 3/4(A)

To Servo Block 3/4(E)

To Servo Block 3/4(V)

To Servo Block 2/4, 3/4(H)

To Servo Block 3/4(S)

To Servo Block 3/4(P)

To Servo Block 3/4(T)

To Servo Block 3/4(C)

To Servo Block 2/4(G)

To Servo Block 3/4(H)

To Servo Block 3/4(Z)

To Servo Block 3/4(B)

To Servo Block 2/4(N)

To Servo Block 3/4(X)

To Servo Block 3/4(M)

To Servo Block 3/4(K)

TO E-67720a CN507

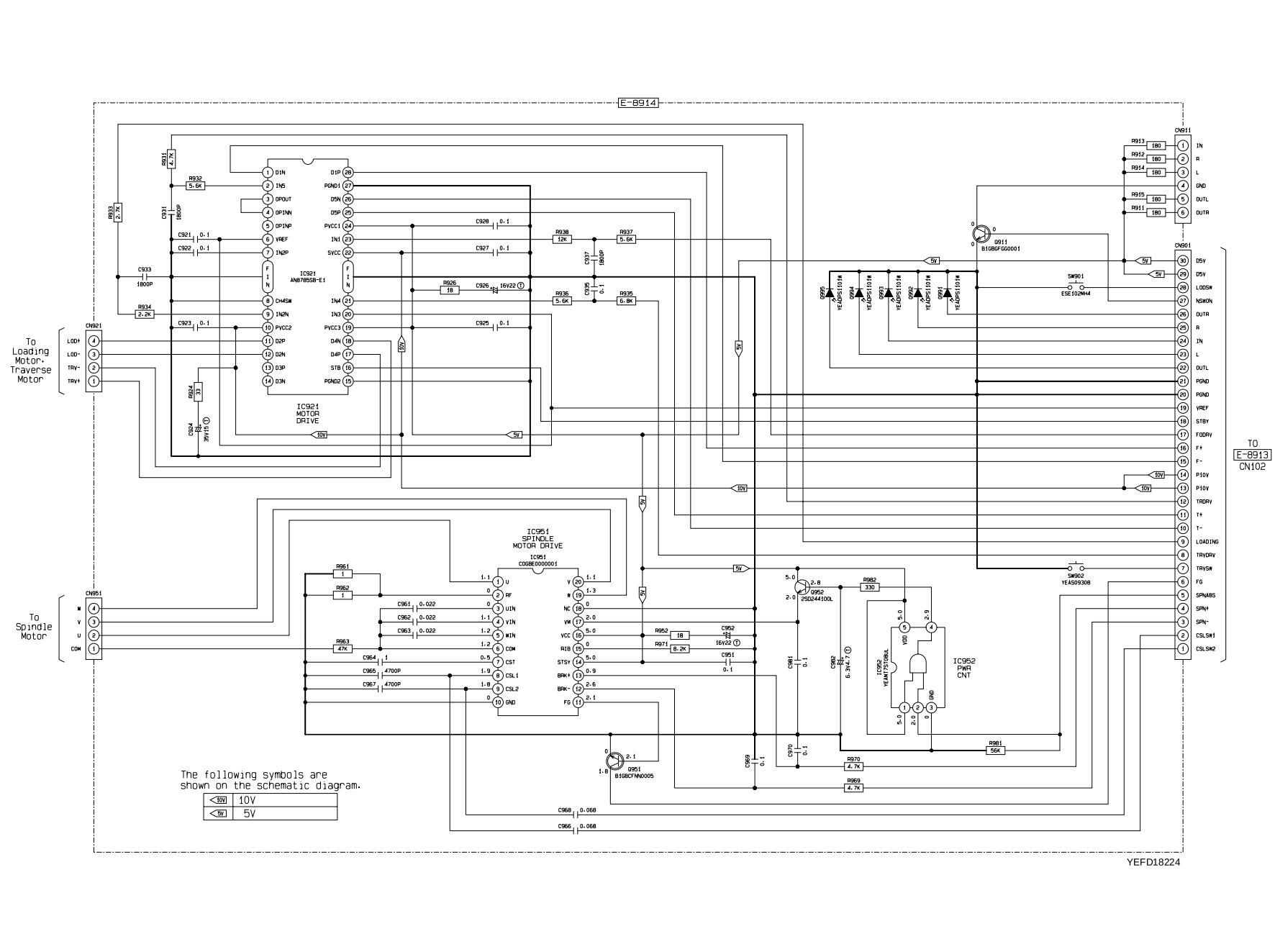
E-8914
IC921
MOTOR
DRIVE
IC951
SPINDLE
MOTOR DRIVE
IC952
PWR
CNT
To
Loading
Motor.
Traverse
Motor
To
Spindle
Motor
TO
E-8913
CN102
The following symbols are
shown on the schematic diagram.
10V
5V
YEFD18224

TO
E-8774Ad
CN901

CN901 (VDD-5V, PANEL, P.GND, RM-DATA, P.GND, SW9V, INV-10V, P.GND, LCD-DI, LCD-CLK, LCD-DO, LCD-CE, INV-GND, INV-GND)

D905 MA8056LMHTX
D904 MA8056LMHTX
D903 MA8056LMHTX
D902 MA8056LMHTX
D901 MA8056LMHTX

R911 1K CLK
R912 1K CE
R913 1K DO
R914 1K DI
R916 100

IC902
IR
RECEIVE
IC902 YEAMPASB06B2

C921 0.22
C922 0.22
C923 1000P
R924 100

R920 1K
D920 LN1271BAL source

Q902 YEANA114WKTX
Q903 YEANC144WKTX
R925 270
D929 YEADP6BM2T1
C924 16V2.2

R921 270
R922 270
R923 270
D923 D930 D928 LNJ306G5TUWO
D922 D925 D927 LN1361CTR
D921 D924 D926

Q901 B1GDJEGJ0002

FU931 YE4FSSFC044A

SW906 K0H1BA000285 SOURCE
SW905 K0H1BA000285 BAND
SW904 K0H1BA000285 OPEN/CLOSE
SW903 K0H1BA000285 SPACE
SW902 K0H1BA000285 DIMMER
SW901 K0H1BA000285 SPEANA
SW912 K0H1BA000083 TRACK DOWN
SW911 K0H1BA000083 SEL
SW910 K0H1BA000083 VOL UP
SW909 K0H1BA000083 VOL DOWN
SW908 K0H1BA000083 MUTE
SW907 K0H1BA000083 C.SP OP/CL
SW916 K0H1BA000083 DISP
SW915 K0H1BA000083 DISC UP
SW914 K0H1BA000083 DISC DOWN
SW913 K0H1BA000083 TRACK UP
KI1 KI2 KI3
KS6 KS5 KS4 KS3 KS2 KS1

L931 YELTD75F101T
R931 2.2K
R932 2.2K
L932 ETJ11K92AM
C934 12P
C931 16V100
C932 0.1
C933 0.022
Q931 YEANSSTA06T
Q932 YEANSSTA06T
CFL931 A2CA00000017
R1
W1

R903 10K
R902 10K
R901 10K
R904 10K
C906 0.1
C901 0.1
C902 0.1
C903 0.1
C904 0.1
C905 220P
R905 33K

IC901
LCD DRIVE
IC901 C0HBA0000048

2V/DIV·2mS/DIV
2V/DIV·2uS/DIV
2V/DIV·1mS/DIV
2V/DIV·1mS/DIV
2V/DIV·2mS/DIV
2V/DIV·2mS/DIV

LCD901
L5ACCLC00009

The following symbols are
shown on the schematic diagram.

10V	10V
9V	9V
5V	5V

The following symbols are shown on the schematic diagram.

◁	+B	◀	RADIO (L.A)
◁8V	8V	◀	CD/MD (L.A)
◁5V	5V	◁	VISUAL
◁-8V	-8V	◁	AUDIO (L.A)

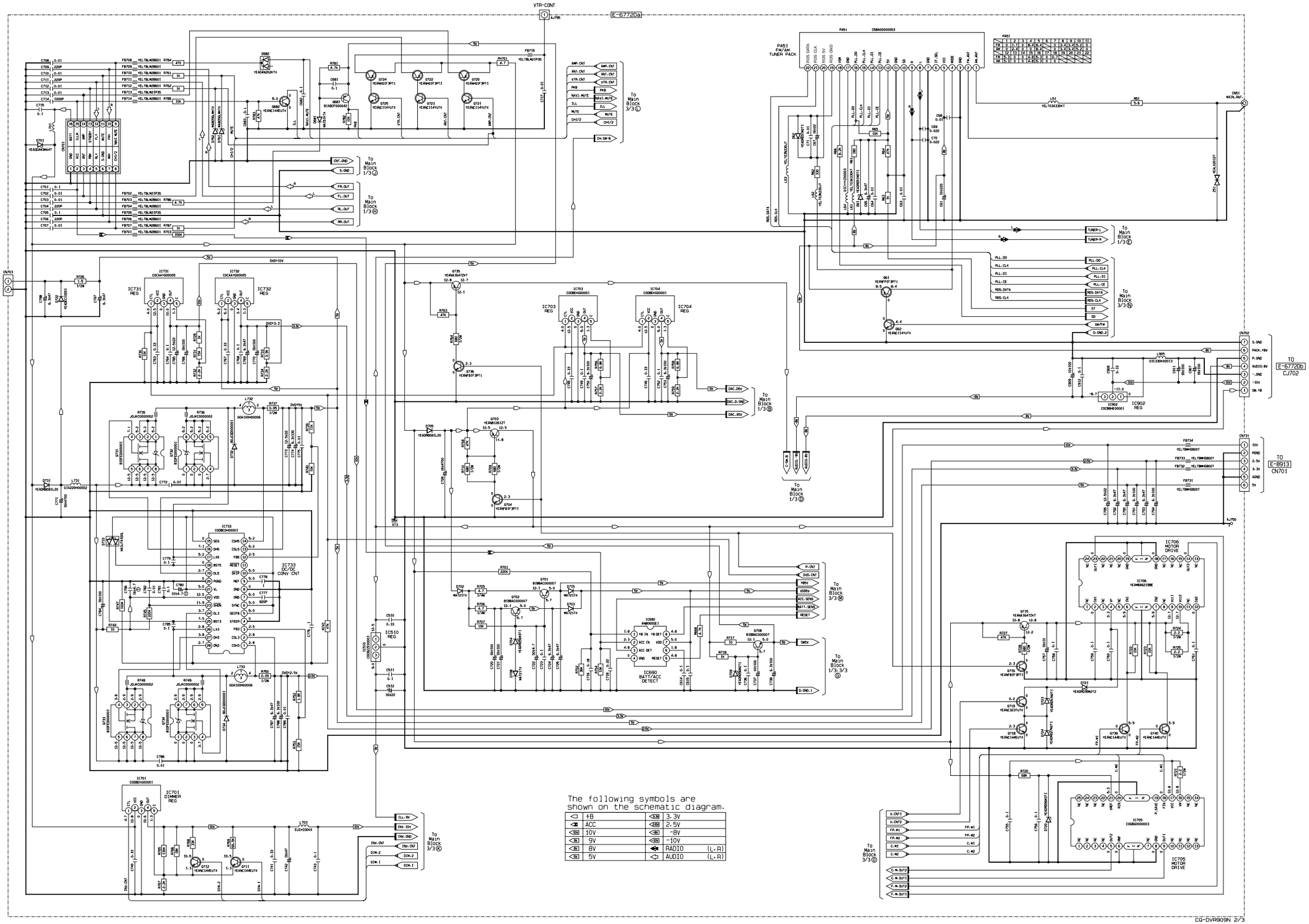
VTR-CONT
E-6772Da
PA51
FM/AM
TUNER PACK
TO FAN
CN703
IC731
REG
IC732
REG
IC703
REG
IC704
REG
IC733
DC/DC
CONV CNT
IC690
BATT/ACC
DETECT
IC510
REG
IC701
DIMMER
REG
IC706
MOTOR
DRIVE
IC705
MOTOR
DRIVE
IC902
REG
CN702
TO E-6772Db
CJ702
CN731
TO E-8913
CN701
To Main Block 1/3
To Main Block 3/3
The following symbols are shown on the schematic diagram.
+B
ACC
10V
9V
8V
5V
3.3V
2.5V
-8V
-10V
RADIO (L.R)
AUDIO (L.R)

E-6772Da

IC602 SUB CPU

IC601 MAIN CPU

IC501 BUS I/F

IC605 REG

IC820 VOICE D/A CONV

To Main Block 1/3Ⓐ

To Main Block 1/3Ⓑ

To Main Block 1/3Ⓒ

To Main Block 2/3Ⓓ

To Main Block 2/3Ⓔ

To Main Block 2/3Ⓕ

To Main Block 2/3Ⓖ

To Main Block 2/3Ⓗ

TO E-8913 CN451

TO Slide Mechanism Ass'y

TO Speaker Block Ass'y

TO E-8770B CN901

E-8774Ac

E-8774Ab

E-8774Ad

The following symbols are shown on the schematic diagram.

◁	+B	3.3V	3.3V
10V	10V	◁	VISUAL
9V	9V	◁	AUDIO
5V	5V		

CQ-DVR909N 3/3

The following symbols are shown on the schematic diagram.

◁	+B
◁ 8V	8V
◁ -10V	-10V

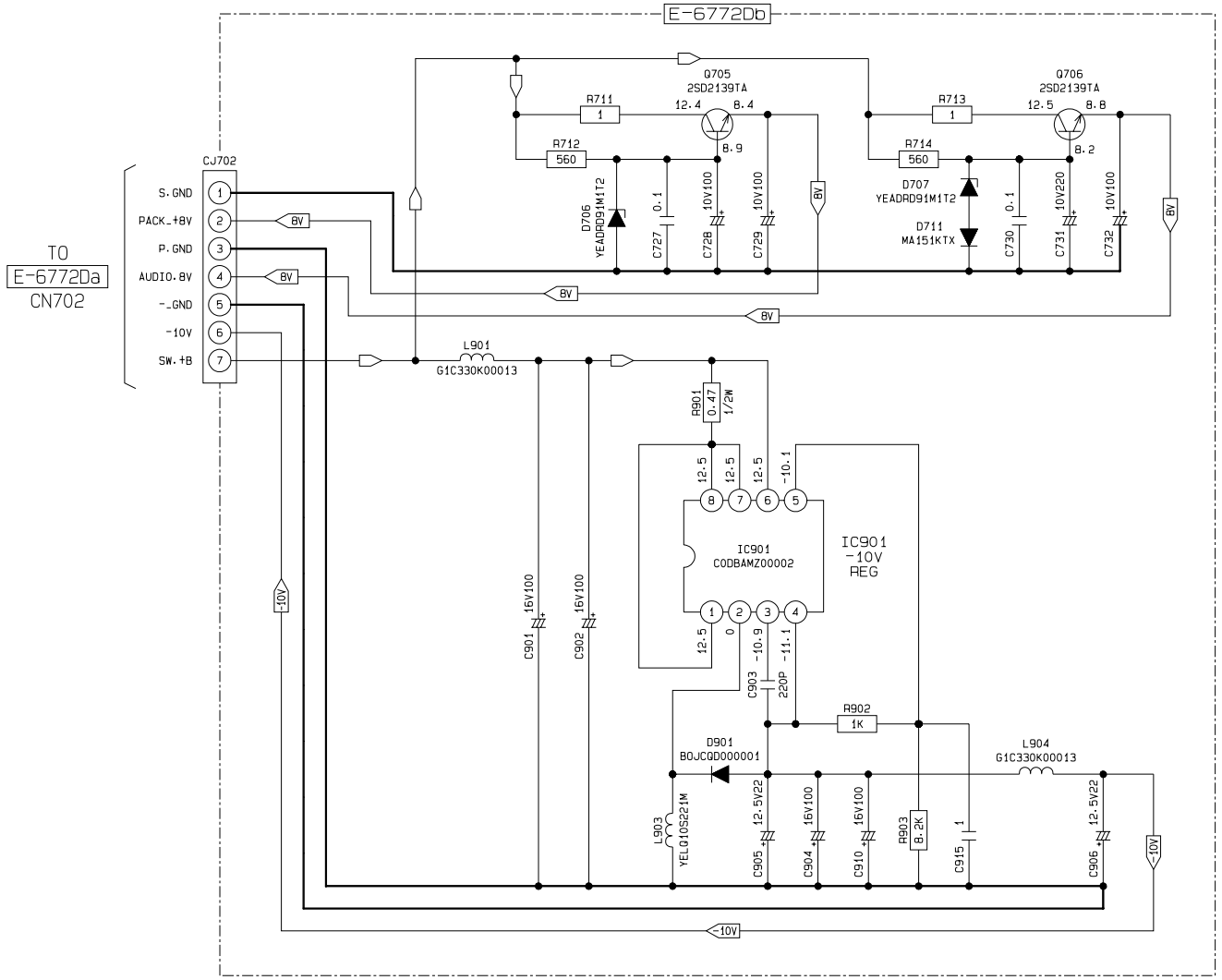

TO
E-8774Ad
CN901

CN901 (VDD-5V, PANEL, P.GND, RM-DATA, P.GND, SW9V, INV-10V / P.GND, LCD-DI, LCD-CLK, LCD-DO, LCD-CE, INV-GND, INV-GND)

D905 MA8056LMHTX
D904 MA8056LMHTX
D903 MA8056LMHTX
D902 MA8056LMHTX
D901 MA8056LMHTX

IC902
IR
RECEIVE
IC902 YEAMPASB06B2

R911 1K CLK
R912 1K CE
R913 1K DO
R914 1K DI
R916 100
R924 100
C921 0.22
C922 0.22
C923 1000P

R921 270
R922 270
R923 270
R925 270

D923 D930 D928 LNJ306G5TUWO
D922 D925 D927 LN1361CTR
D921 D924 D926 LN1361CTR

D929 YEADP6BM2T1
C924 16V2.2

R920 1K
D920 LN127BAL source

Q902 YEANA114WKTX
Q903 YEANC144WKTX
Q901 B1GDJEGJ0002

FU931 YE4FSSFC044A

SW906 K0H1BA000285 SOURCE
SW905 K0H1BA000285 BAND
SW904 K0H1BA000285 OPEN/CLOSE
SW903 K0H1BA000285 SPACE
SW902 K0H1BA000285 DIMMER
SW901 K0H1BA000285 SPEANA
SW912 K0H1BA000083 TRACK DOWN
SW911 K0H1BA000083 SEL
SW910 K0H1BA000083 VOL UP
SW909 K0H1BA000083 VOL DOWN
SW908 K0H1BA000083 MUTE
SW907 K0H1BA000083 C.SP OP/CL
SW916 K0H1BA000083 DISP
SW915 K0H1BA000083 DISC UP
SW914 K0H1BA000083 DISC DOWN
SW913 K0H1BA000083 TRACK UP

KI1 KI2 KI3
KS6 KS5 KS4 KS3 KS2 KS1

L931 YELTD75F101T
R931 2.2K
R932 2.2K
L932 ETJ1K92AM
C931 16V100
C932 0.1
C933 0.022
C934 12P
Q931 YEANSSTA06T
Q932 YEANSSTA06T
CFL931 A2CA000000017
R1
W1

IC901
LCD DRIVE
IC901 C0HBA0000048

R903 10K
R902 10K
R901 10K
R904 10K
R905 33K
C905 220P
C906 0.1
C901 0.1
C902 0.1
C903 0.1
C904 0.1

KI1 KI2 KI3 P1 P2 P3 P4 VDD VLCD VLCD0 VLCD1 VLCD2 VLCD3 VLCD4 VSS TEST OSC0 OSC1 /INH DO CE CL DI

2V/DIV·2mS/DIV
2V/DIV·2uS/DIV
2V/DIV·1mS/DIV
2V/DIV·1mS/DIV
2V/DIV·2mS/DIV

LCD901
L5ACCLC00009

The following symbols are
shown on the schematic diagram.

10V	10V
9V	9V
5V	5V

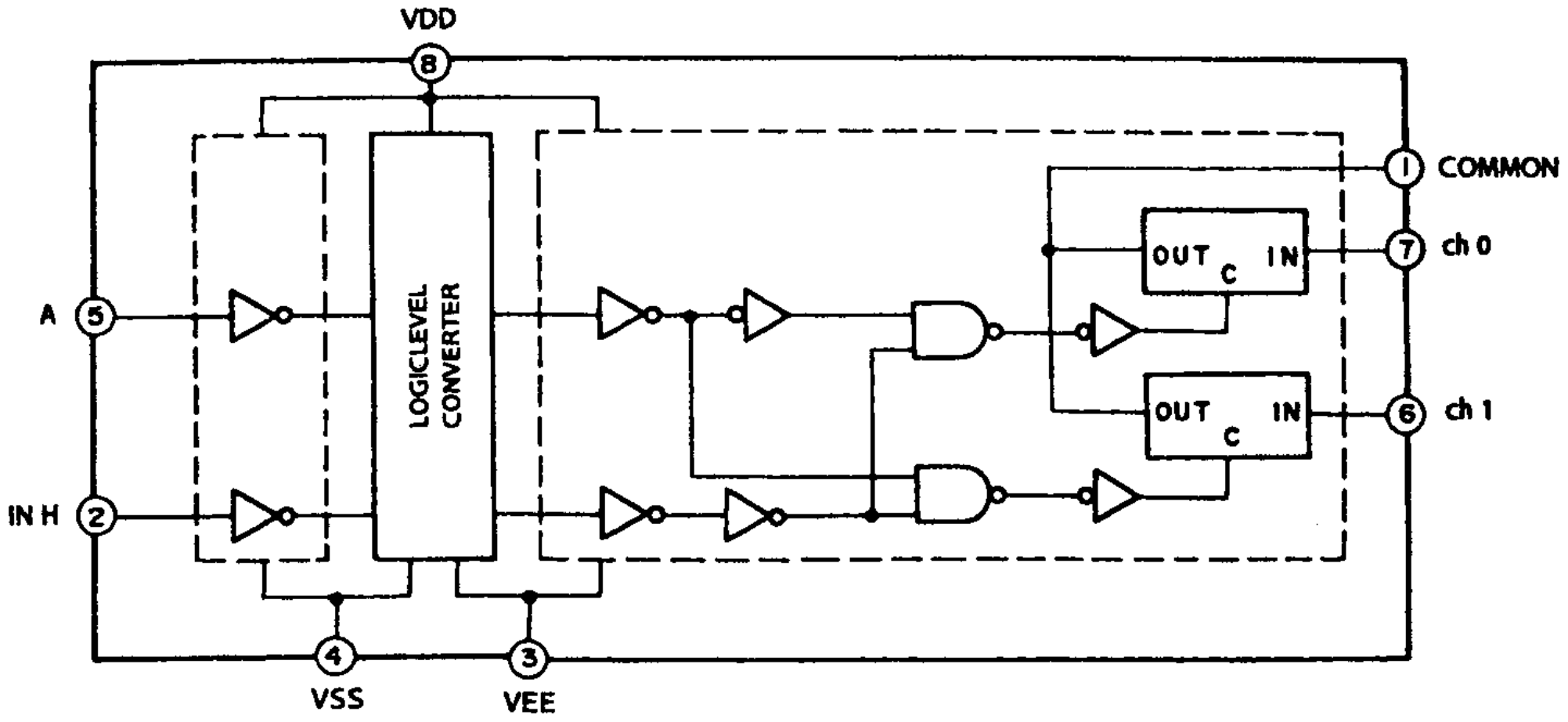
VDD
8
COMMON
1
OUT
C
IN
7
ch 0
A
5
LOGICLEVEL
CONVERTER
OUT
C
IN
6
ch 1
IN H
2
4
3
VSS
VEE

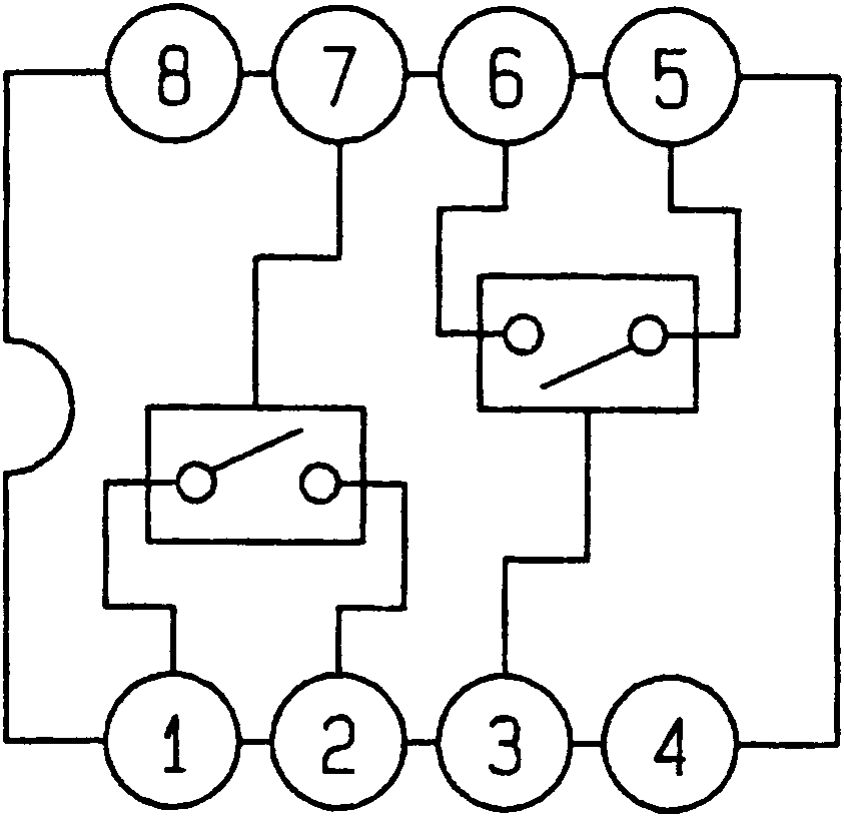
8
7
6
5
1
2
3
4

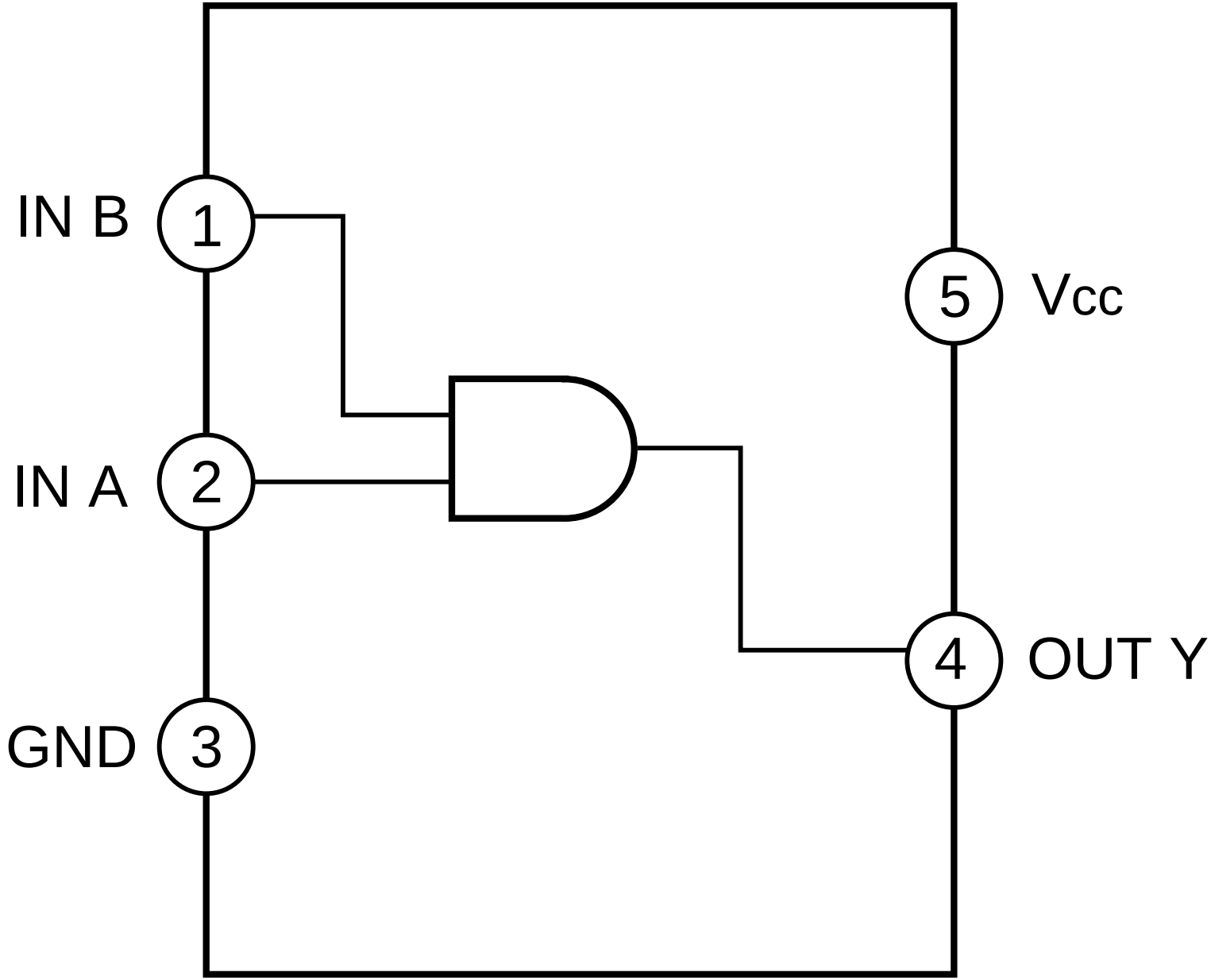
IN B
1
IN A
2
GND
3
5
Vcc
4
OUT Y

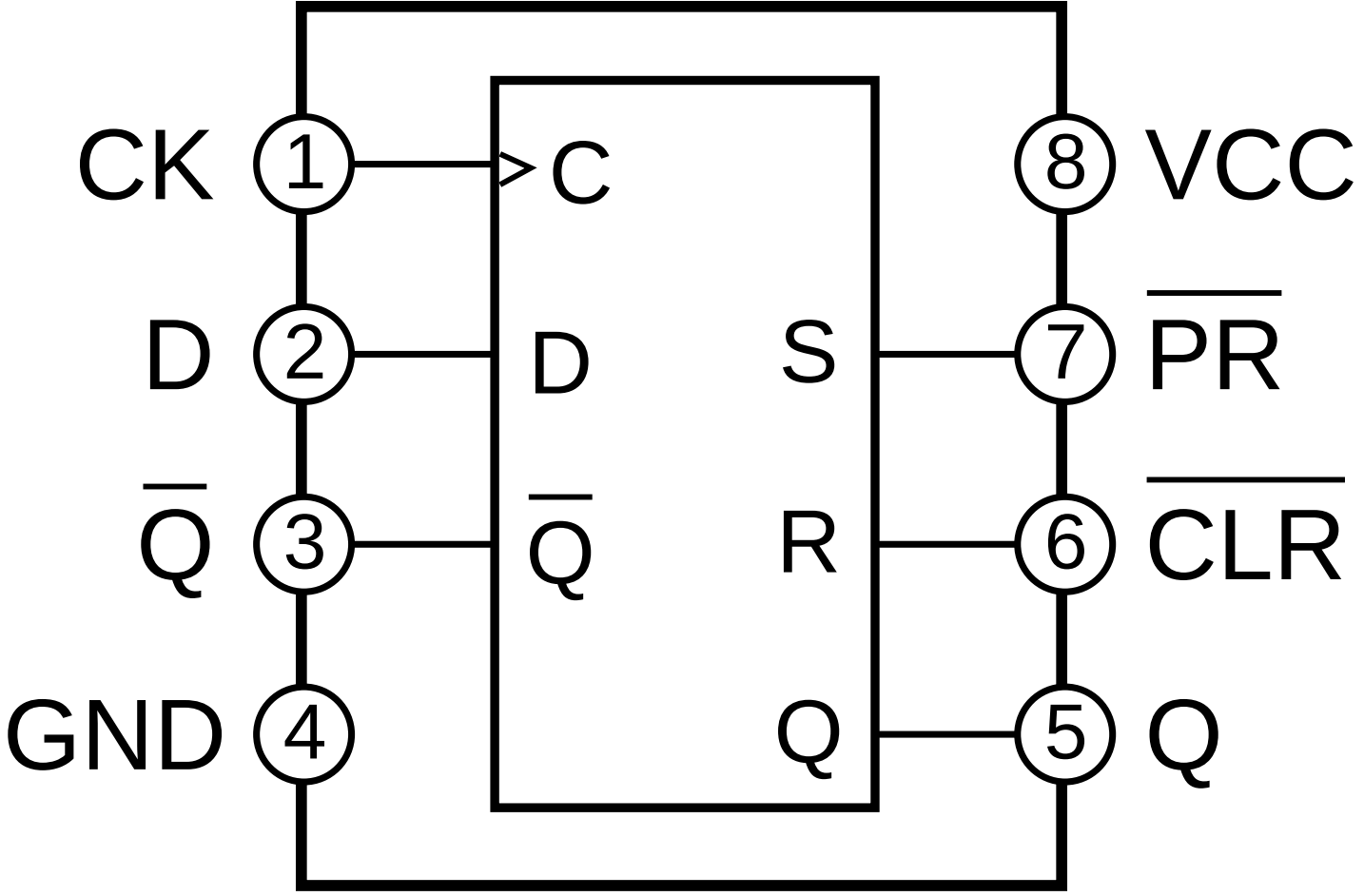
CK
1
C
8
VCC
D
2
D
S
7
PR
Q
3
Q
R
6
CLR
GND
4
Q
5
Q

Safety Information

ENGLISH

CAUTION:
THIS PRODUCT IS A CLASS I LASER PRODUCT. HOWEVER THIS PRODUCT USES A VISIBLE/INVISIBLE LASER BEAM WHICH COULD CAUSE HAZARDOUS RADIATION EXPOSURE IF DIRECTED. BE SURE TO OPERATE THIS PRODUCT CORRECTLY AS INSTRUCTED.
USE OF CONTROLS OR ADJUSTMENTS OR PERFORMANCE OF PROCEDURES OTHER THAN THOSE SPECIFIED HEREIN MAY RESULT IN HAZARDOUS RADIATION EXPOSURE.
DO NOT OPEN COVERS AND DO NOT REPAIR YOURSELF. REFER SERVICING TO QUALIFIED PERSONNEL.

WARNING:
TO REDUCE THE RISK OF FIRE OR ELECTRIC SHOCK, DO NOT EXPOSE THIS PRODUCT TO RAIN OR MOISTURE.

TO REDUCE THE RISK OF FIRE OR ELECTRIC SHOCK, AND ANNOYING INTERFERENCE, USE ONLY THE RECOMMENDED ACCESSORIES.

THIS DEVICE IS INTENDED FOR CONTINUOUS OPERATION!

WARNING:
NOT FOR USE WHERE VIDEO MONITOR IS VISIBLE TO DRIVER TO AVOID RISK OF SERIOUS INJURY OR POSSIBLE VIOLATION OF STATE LAWS.

Apparatus Claims of U.S. Patent Nos. 4,631,603, 4,577,216, and 4,819,098, licensed for limited viewing uses only.

This product incorporates copyright protection technology that is protected by method claims of certain U.S. patents and other intellectual property rights owned by Macrovision Corporation and other rights owners. Use of this copyright protection technology must be authorized by Macrovision Corporation, and is intended for home and other limited viewing uses only unless otherwise authorized by Macrovision Corporation. Reverse engineering or disassembly is prohibited.

Part 15 of the FCC Rules
This unit has been manufactured under the part 15 of the FCC Rules. Do not attempt to make any changes or modifications to this unit.

Meaning of Symbols

Press

Indicates pressing a button.

Hold (2 seconds)

Indicates pressing a button for an extended period of time.

This manual primarily explains how to perform operations using the remote control. When performing an operation directly on the main unit, do as indicated in this box.

Indicates detailed information about operations and settings.

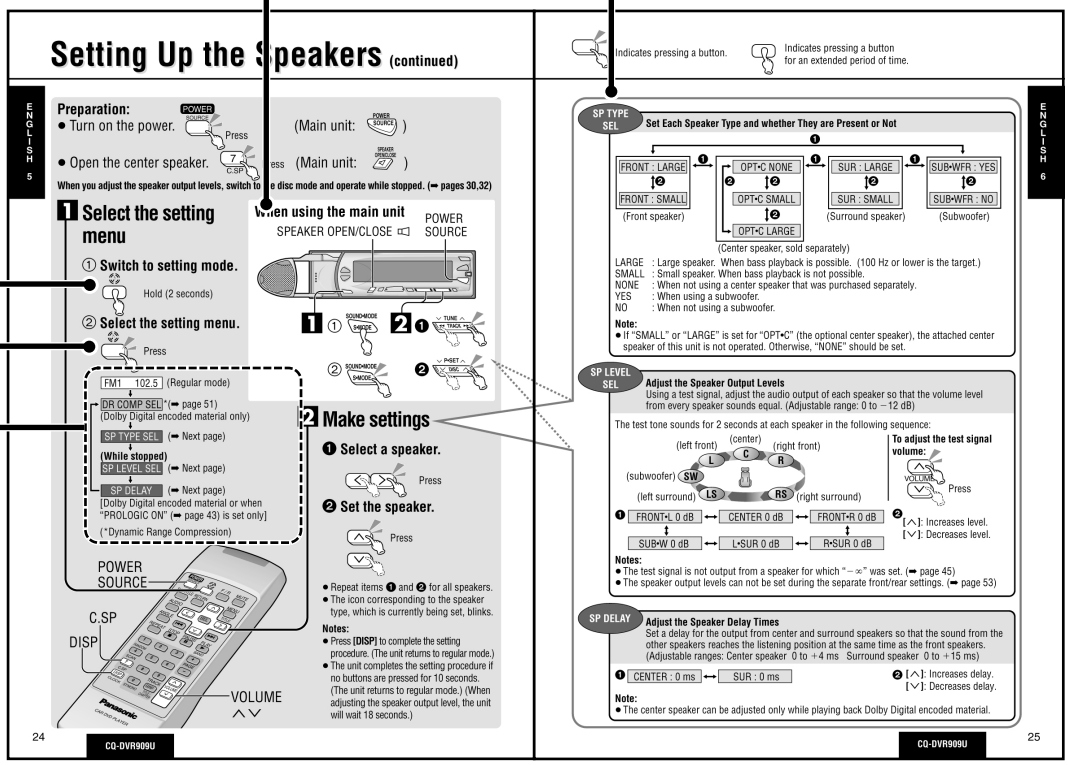

Indicates that each time you press the button, the display changes as shown.

Label indication and location

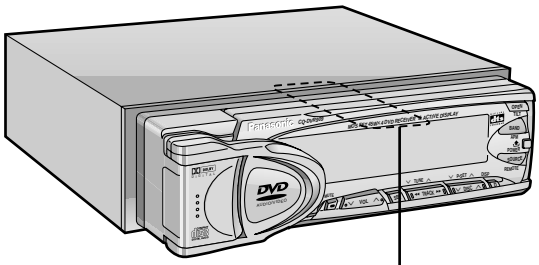

Identification Label

Panasonic

Model No.
N° De Modèle **C Q - D V R 909 U**

12V	4~8Ω	15A		FM75Ω

Manufactured by Matsushita Communication Industrial Co., Ltd.
Yokohama Japan Made in Japan

Serial No.
N° De Série

This device complies with Part 15 of the FCC Rules. Operation is subject to the condition that this device does not cause harmful interference.

❒ Use This Product Safely

When Driving

Keep the volume level low enough to be aware of road and traffic conditions.

When Car Washing

Do not expose the product, including its speakers and CDs, to water or excessive moisture. This could cause electrical shorts, fire or other damage.

When Parked

Parking in direct sunlight can produce very high temperatures inside your car. Give the interior a chance to cool down before switching the unit on.

Use the Proper Power Supply

This product is designed to operate with a 12 volt, negative ground battery system (the regular system in a North American car).

Protect the Disc Mechanism

Avoid inserting any foreign objects into the slot of the disc player.
Failure to observe this may cause malfunction due to the precise mechanism of this unit.

Protect the DVD Software

When you leave the car, be sure to eject the disc from this unit and bring it out.

Use Authorized Servicenters

Do not attempt to disassemble or adjust this precision product. Please refer to the Servicenter list included with this product for service assistance.

For Installation

The unit should be installed in a horizontal position with the front end up at a convenient angle, but not more than 30°.

Indicates operations that can only be performed through the main unit.

Indicates the compatible types of disc.

DVD AUDIO DVD VIDEO VIDEO CD CD

DVD Audio·Video/Video CD/CD Basics

Perform these operations with the remote control.
Before performing any operation, check the TV connection setting (➡ page 39) .
Operations vary according to the disc. For details, refer to the guide provided with the disc.

Inserting/Removing the Disc

1 Open the panel

Press

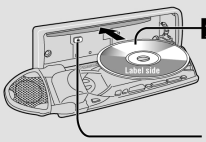

2 Insert the disc

(It takes a few seconds to load the disc after the panel opens. If you force to insert the disc by hand, the disc may be damaged.)

- The panel closes and the disc begins playing.
- The type of disc is automatically discriminated.

Removing a disc

Press

Cautions:

- **Do not obstruct the opening/closing of the panel.**
- **When the panel is fully open (no sound is output), do not apply excessive pressure to the panel or push hard on the buttons on the panel.**

Starting Playback

Select the disc mode

(Example: "DVD AUDIO")

Press

Playback starts.

CQ-DVR909U

Indicates pressing a button.

Indicates pressing a button for an extended period of time.

Changing the Display

DVD AUDIO DVD VIDEO VIDEO CD CD

Press

DVD Audio

(Group number) (Track number)
AUDIO 01–02 → 02 00:00'01 → 10:22 → DVD AUDIO
(Track number) ← (Elapsed playback time) (Clock display) (Display off)

DVD Video

(Title number) (Chapter number)
VIDEO 01–003 → 003 00:00'01 → 10:22 → DVD VIDEO
(Chapter number) ← (Elapsed playback time) (Clock display) (Display off)

Video CD

VCD → 00:00'01 → 10:22 → VCD
(Elapsed playback time) (Clock display) (Display off)

CD

(Track number)
CD 01 0'01 → 10:22 → CD
(Elapsed playback time) (Clock display) (Display off)

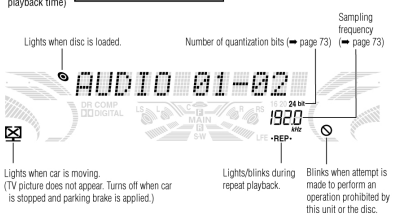

Notes:

- When the disc is removed while the unit is in DVD/video CD/CD mode, the power turns off.
- If a disc is inserted while the power is off, the power turns on.
- During playback of Dolby Digital encoded material, setting "DR COMP ON" will make comparatively quiet sounds easier to hear. (➡ page 50)

CQ-DVR909U

CQ-DVR909U

Discs that can be Played Back

Disc	Mark (logo)	Disc size	Video format	Region number
DVD audio	DVD AUDIO	5″(12 cm)	NTSC	
DVD video	DVD VIDEO		NTSC	1 All
Video CD	COMPACT disc DIGITAL VIDEO	3″(8 cm)	NTSC	
CD	COMPACT disc DIGITAL AUDIO			

Region Management Information

Region Management Information: This product is designed and manufactured to respond to the Region Management Information that is recorded on a DVD disc. If the Region number described on the DVD disc does not correspond to the Region number of this product, this product cannot play this disc.

The Region number for this product is “1” and “ALL”.

❒ The following discs cannot be played back on this product.

● DVD-ROM ● DVD-R/DVD-RAM ● CD-ROM ● VSD ● CDV ● CD-G ● SACD ● photo CD ● CD-R* ● some DTS CD discs ● CD-EXTRA (audio-only playback possible) ● DVDs with a region number other than “1” or “ALL” ● discs recorded in PAL format, others.

(*Because this product has its own reading device, CD-R discs can not be played back.)

Preparing the Remote Control

Inserting and Replacing the Batteries

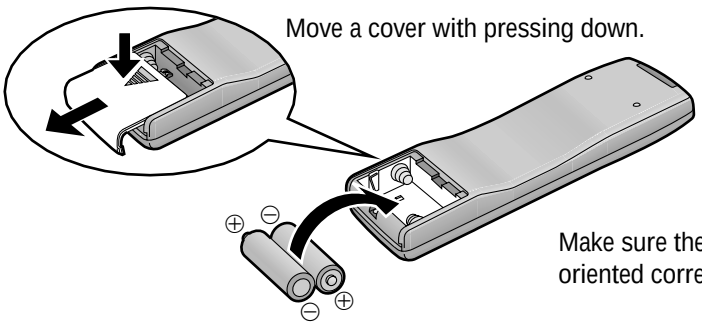

- Type used: 2 AA dry cells (R6PU)
- Battery life: Approximately 5 months under normal use (when using manganese batteries at room temperature)

Setting Up the Speakers (continued)

Preparation:

- Turn on the power. 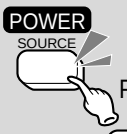

(Main unit:

)

- Open the center speaker.

(Main unit:

)

When you adjust the speaker output levels, switch to the disc mode and operate while stopped. (➡ pages 30,32)

1 Select the setting menu

① Switch to setting mode.

Hold (2 seconds)

② Select the setting menu.

Press

FM1 102.5 (Regular mode)

↓

DR COMP SEL *(➡ page 51)
(Dolby Digital encoded material only)

↓

SP TYPE SEL (➡ Next page)

↓

(While stopped)

SP LEVEL SEL (➡ Next page)

↓

SP DELAY (➡ Next page)

[Dolby Digital encoded material or when "PROLOGIC ON" (➡ page 43) is set only]

(*Dynamic Range Compression)

When using the main unit

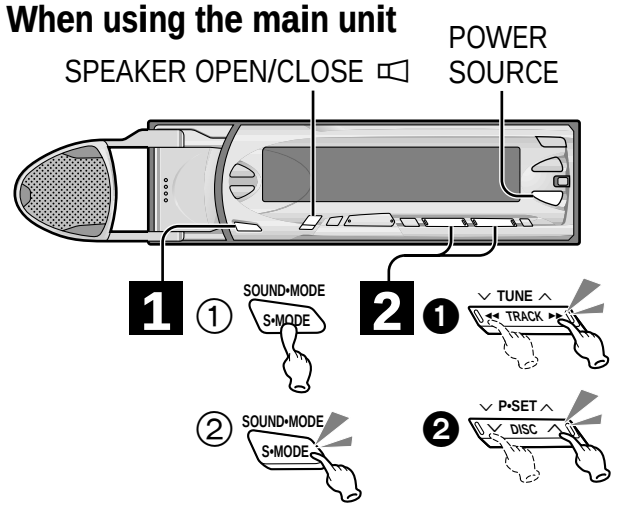

2 Make settings

❶ Select a speaker.

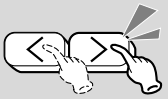
Press

❷ Set the speaker.

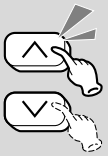
Press

- Repeat items ❶ and ❷ for all speakers.
- The icon corresponding to the speaker type, which is currently being set, blinks.

Notes:

- Press **[DISP]** to complete the setting procedure. (The unit returns to regular mode.)
- The unit completes the setting procedure if no buttons are pressed for 10 seconds. (The unit returns to regular mode.) (When adjusting the speaker output level, the unit will wait 18 seconds.)

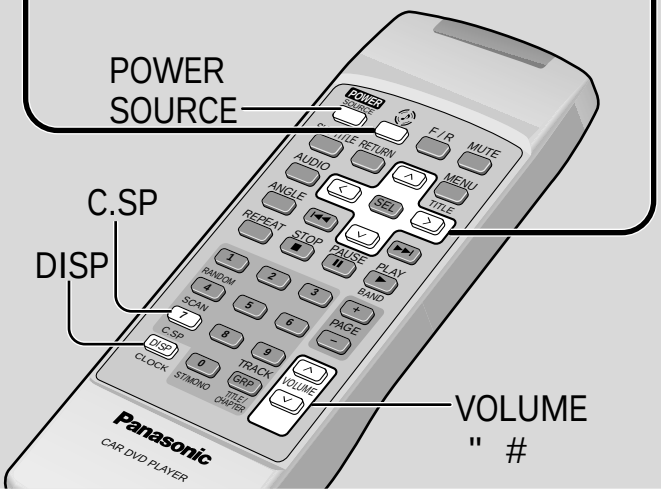

Setting Up the Speakers

Speakers that are Used

Front speakers

Use the type of speakers that are built into the driver's door and the passenger's door.

Surround speakers

Use the type of speaker that is used on the left and right side of the rear of the passenger cabin, or that is built into the rear deck.

Center speaker

We recommend you to use the speaker that is built into this unit. When using a separate speaker, install the speaker near the center console of the car, or near the dashboard.

Subwoofer

Because the positioning of the sound from the subwoofer is not as dependent on the installation location as it is with other speakers, the subwoofer can be placed anywhere desired. (A separate subwoofer amplifier is required.)

Note:

- If this unit is going to be used without the installation of the surround speakers or subwoofer, set the speaker setting to suit the speaker system to be used. (➡ page 24)

Speaker Setup Display

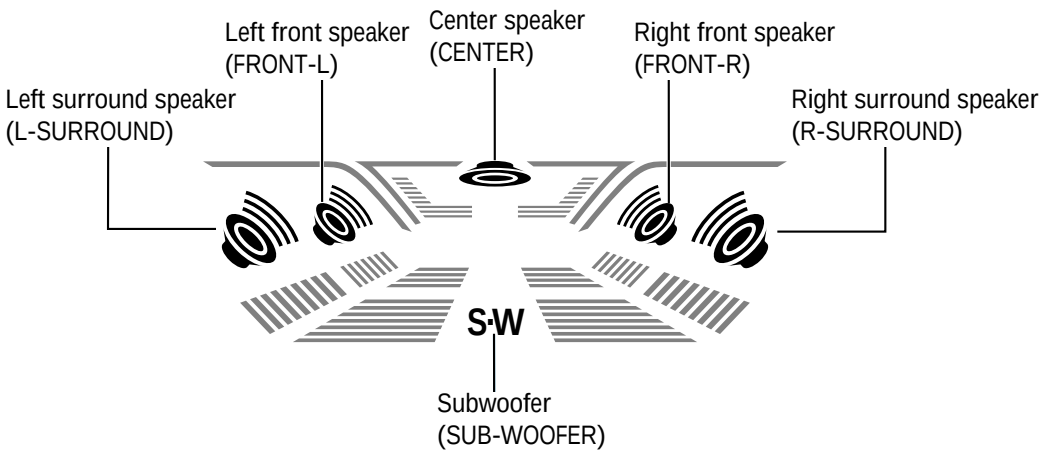

Speaker Setup Procedure

To reproduce the surround sound correctly, first set and adjust the speakers in the sequence shown below.

❶ Set each speaker type and whether they are present or not. (➡ page 24)

❷ Adjust the speaker output levels. (➡ page 24)

❸ Adjust the speaker delay times. (➡ page 24)

After setting ❶ through ❸, set the sound. (➡ page 42)

SP TYPE SEL

Set Each Speaker Type and whether They are Present or Not

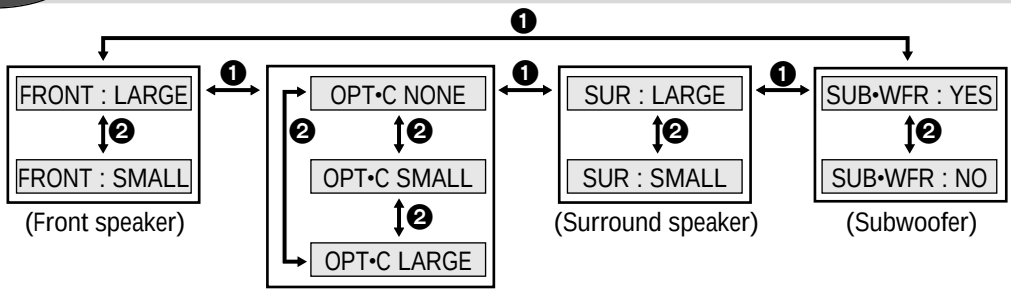

LARGE : Large speaker. When bass playback is possible. (100 Hz or lower is the target.)
SMALL : Small speaker. When bass playback is not possible.
NONE : When not using a center speaker that was purchased separately.
YES : When using a subwoofer.
NO : When not using a subwoofer.

Note:

- If "SMALL" or "LARGE" is set for "OPT•C" (the optional center speaker), the attached center speaker of this unit is not operated. Otherwise, "NONE" should be set.

SP LEVEL SEL

Adjust the Speaker Output Levels

Using a test signal, adjust the audio output of each speaker so that the volume level from every speaker sounds equal. (Adjustable range: 0 to −12 dB)

The test tone sounds for 2 seconds at each speaker in the following sequence:

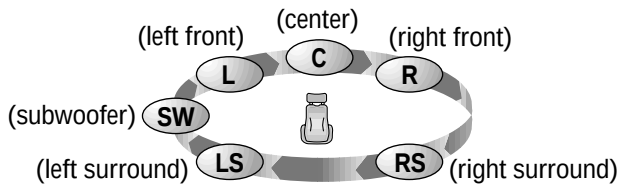

To adjust the test signal volume:

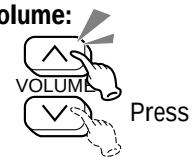

❶ FRONT•L 0 dB ↔ CENTER 0 dB ↔ FRONT•R 0 dB
SUB•W 0 dB ↔ L•SUR 0 dB ↔ R•SUR 0 dB

❷ **["]**: Increases level.
[#]: Decreases level.

Notes:

- The test signal is not output from a speaker for which "−∞" was set. (➡ page 45)
- The speaker output levels can not be set during the separate front/rear settings. (➡ page 53)

SP DELAY

Adjust the Speaker Delay Times

Set a delay for the output from center and surround speakers so that the sound from the other speakers reaches the listening position at the same time as the front speakers. (Adjustable ranges: Center speaker 0 to +4 ms Surround speaker 0 to +15 ms)

❶ CENTER : 0 ms ↔ SUR : 0 ms

❷ **["]**: Increases delay.
[#]: Decreases delay.

Note:

- The center speaker can be adjusted only while playing back Dolby Digital encoded material.

Common Operations

Before performing any of these operations, turn your car's ignition switch to "ACC" or "ON".

A Power

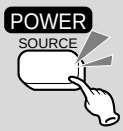

- Turn the power on.
- The first time that you turn the unit on, the radio will begin playing and the message "Panasonic Presents……" (demonstration mode) will be displayed.

To cancel the demonstration mode:

To turn the power off:

Note:

- Loading/ejecting a disc also turns the power on/off. (➡ page 30)

When using the main unit

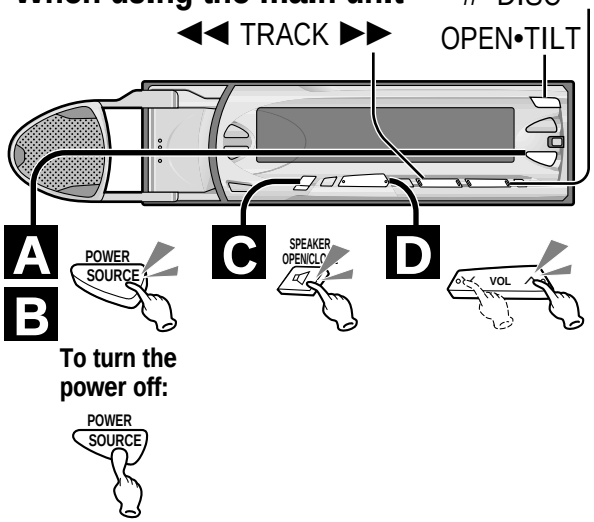

To turn the power off:

B Audio Source

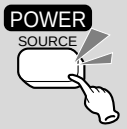

TUNER (Radio)
↓
DVD VIDEO (depends on the disc)
↓
CHANGER (When a separate CD/MD changer is connected)
↓
AUXILIARY (Auxiliary source)

C Center Speaker

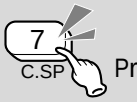

- Press the button to open and close the center speaker.
- To open the center speaker through the remote control while playing a DVD or a video CD, hold the button down for more than 2 seconds.

Notes:

- You can adjust the output level/ volume of the center speaker. (➡ pages 25, 45)
- You cannot open or close the center speaker while the panel is open.

D Volume

(Adjustable range: 0 to 40)

Note:

- When you switch the source, the volume that was set last for that source is restored. (Intelligent Volume)

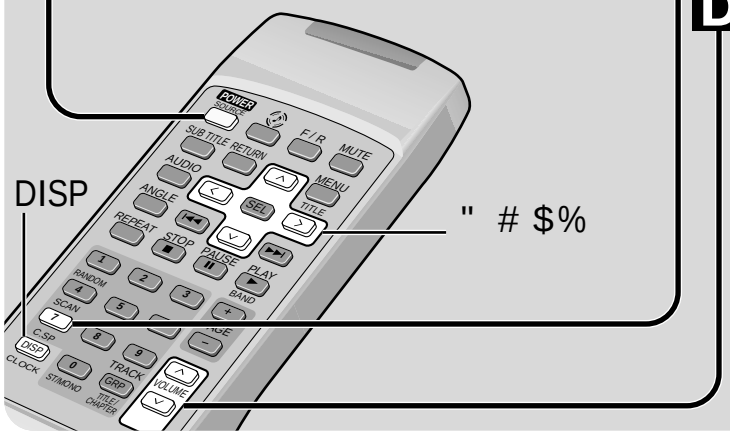

Radio Basics

1 Select "TUNER"

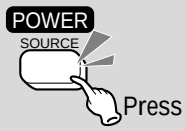

2 Select the band

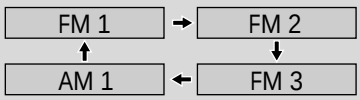

When using the main unit

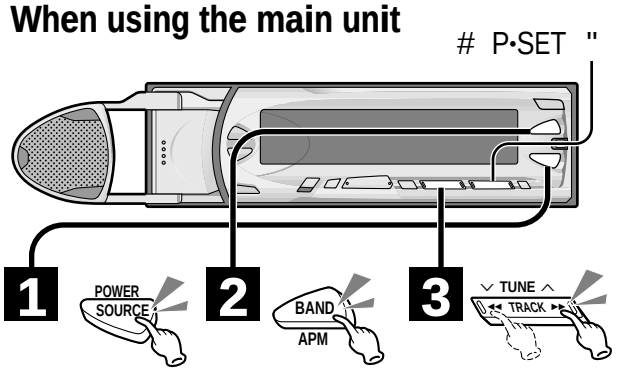

3 Select the station

:Increases the frequency.

Press

: Decreases the frequency.

Press

- The frequency changes each time one of these buttons is pressed. <step mode>
- If you hold down the button for more than 0.5 second and then release the button, the tuner will begin scanning frequencies in that direction, and then will stop when it picks up a station. <seek mode>

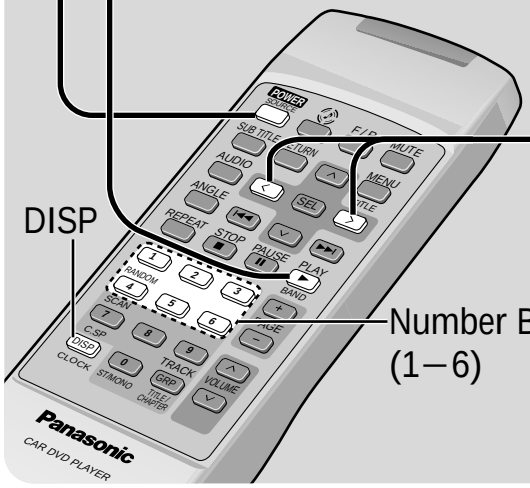

Changing the Display

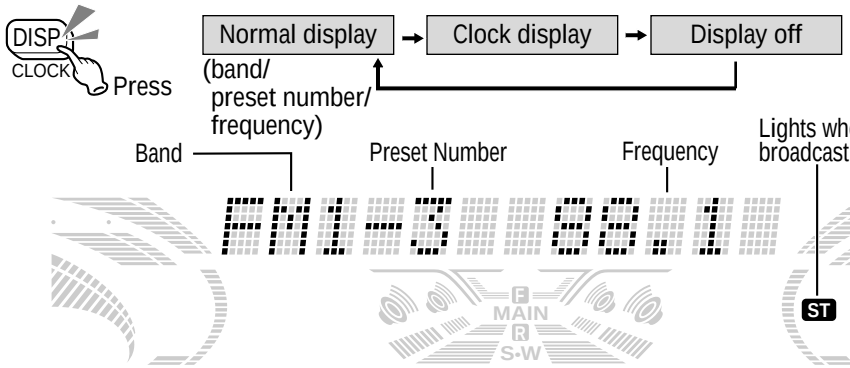

Setting the Clock

The clock uses a 12-hour display.

① DISP/CLOCK Hold (2 seconds) 12 : 00

② Switch between the hours and minutes displays, and set both.

: Selects the hours display, which begins to blink. (Main unit: TUNE ◄◄ TRACK)

: Selects the minutes display, which begins to blink. (Main unit: ►► TRACK)

: Increases the number in the selected display. (Main unit: ∧ DISC)

: Decreases the number in the selected display. (Main unit: ∨ DISC)

③ Finalize the time setting.

DISP/CLOCK Press

10 : 35

- The clock begins to run.

To display the time:

DISP/CLOCK Press

Press the button repeatedly until the time is displayed.

- "ADJUST" will be displayed when the clock is not adjusted.

Opening/Closing the Panel

OPEN/TILT Press

- The panel opens. (When the panel is open, this unit is muted and you can not operate except for some buttons.)

To close the panel:

OPEN/TILT Hold (1 second)

- The panel closes and returns to the angle of tilt that you have previously set.

OPEN/TILT Press

- The panel closes completely, and the tilt setting is cancelled.

Caution:

- **Do not attempt to manually move or stop or strike the panel or the center speaker.**

Notes:

- If no button is pressed for about 20 seconds, the panel closes automatically and returns to the angle of tilt that you have previously set.
- The panel closes completely when the ignition switch is turned to "OFF".

Tilting the Panel

You can adjust the tilt of the panel to make it easier to see.

OPEN/TILT Hold

- To change the tilt of the panel, hold the button down for more than 1 second. <The tilting mechanism has three tilt positions.>

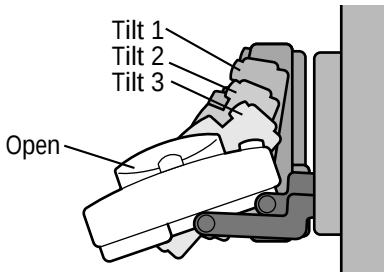

Note:

- The panel will open to the angle of tilt that you have previously set whenever you turn the ignition switch to "ACC" or "ON".

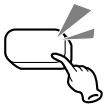 Indicates pressing a button.

Indicates pressing a button for an extended period of time.

Setting Up Station Presets

You can store presets for up to 6 stations in each AM and FM band (up to a maximum of 24).

Storing Presets Manually

After selecting a band and a station...

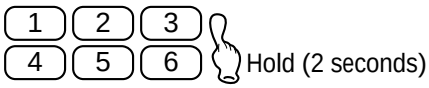

- When the station is stored in the preset, the frequency will blink once.

Using the buttons on the main unit

① Set preset mode.

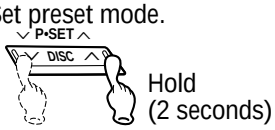

- The preset number blinks.

② Select a preset number.

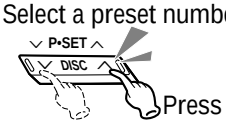

③ Select the station.

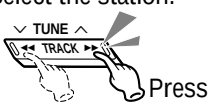

④ Store the station in the preset.

- The preset number stops blinking, and the frequency blinks once.

To cancel during setting procedure:

Storing Presets Automatically

After selecting a band...

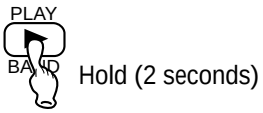

- Starting from the low end of the frequency spectrum, the unit will begin storing each station that it picks up with clear reception in preset numbers 1 through 6.
- When a station is stored in a preset, the preset number blinks for about 5 seconds, and then the next preset number is called up. <preset scan mode>

To stop preset scanning:
Select a preset number.

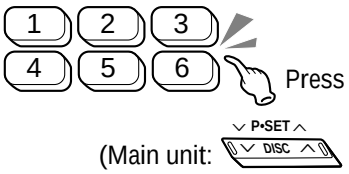

Listening to a Preset Station

After selecting a band...

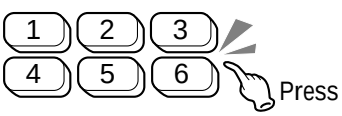

- The stored station is received.

Using the buttons on the main unit

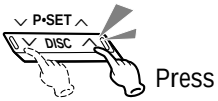

Select a preset number.

DVD Audio·Video/Video CD/CD Basics

Perform these operations with the remote control.
Before performing any operation, check the TV connection setting (➡ page 39) .
Operations vary according to the disc. For details, refer to the guide provided with the disc.

Inserting/Removing the Disc

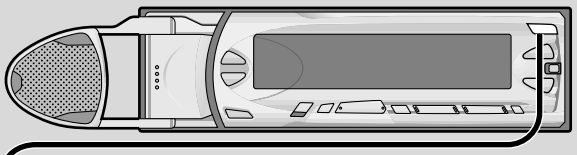

1 Open the panel

Press

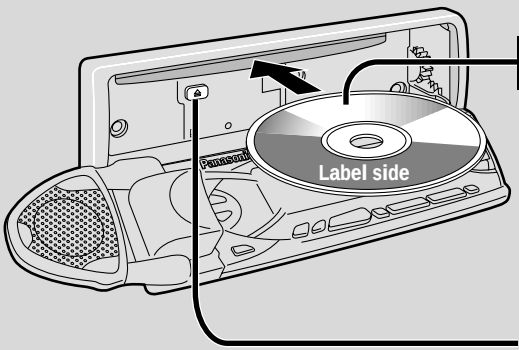

2 Insert the disc

(It takes a few seconds to load the disc after the panel opens. If you force to insert the disc by hand, the disc may be damaged.)

- The panel closes and the disc begins playing.
- The type of disc is automatically discriminated.

Removing a disc

Press

Cautions:

- **Do not obstruct the opening/closing of the panel.**
- **When the panel is fully open (no sound is output), do not apply excessive pressure to the panel or push hard on the buttons on the panel.**

Starting Playback

Select the disc mode

(Example: "DVD AUDIO")

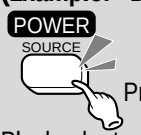

Press

Playback starts.

DVD Audio·Video/Video CD/CD Basics
(continued)

Selecting a Menu Item

DVD AUDIO · DVD VIDEO · VIDEO CD

Some DVD discs have unique menu structures called DVD menu. DVD discs programmed with complex contents provide guide menus, and those recorded with various languages provide menus, audio and subtitle languages. Although the DVD menu's contents and operation differ from disc to disc, the following explains basic operation when this feature is used. Please refer to "DVD Menu" (➡ page 35) or "Title Menu" (➡ page 37) for further instructions.

DVD

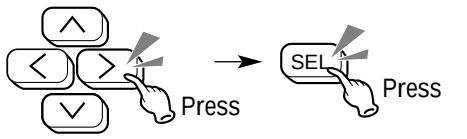

(Select item) (Finalize selection)

Example)

MAIN MENU
Live (Part 1)
Live (Part 2)
Back stage

To return to the previous menu screen or to re-input a number:

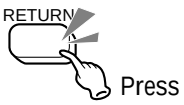

DVD/Video CD with playback control

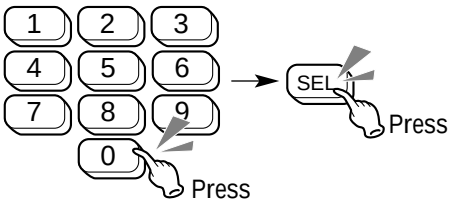

(Select item) (Finalize selection)

Example)

Select your favorite music
1. Love Supremes
2. Impressions
3. In a sentimental mood

Notes:

- Pressing **[▶▶|][|◀◀]** while a video CD with playback control is being played may cause you to return to the menu screen.
- Operations vary according to the disc. For details, refer to the guide provided with the disc.

Stopping

DVD AUDIO · DVD VIDEO · VIDEO CD

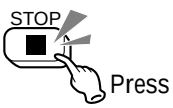

- "STOP" blinks.
- Pressing **[PLAY►]** causes playback to resume from the location where it stopped. (Continued playback function)
  (During stop, press **[STOP■]** again to cancel continued playback and "STOP" turns to light.)

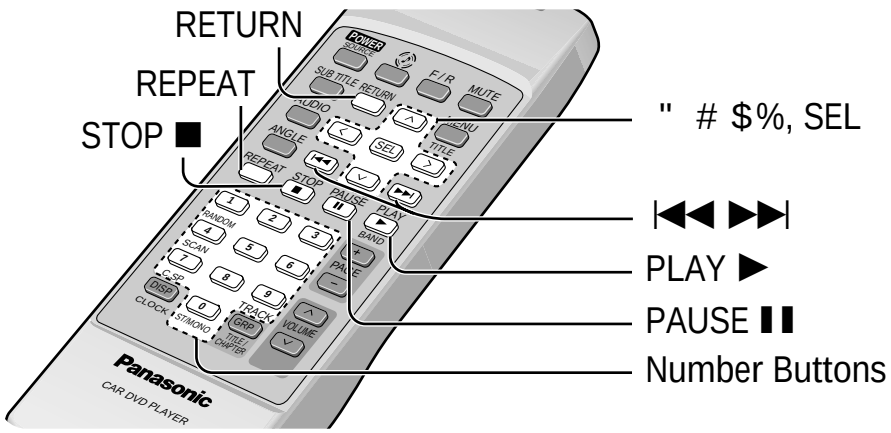

Indicates pressing a button.

Indicates pressing a button for an extended period of time.

Changing the Display

DVD AUDIO — DVD VIDEO — VIDEO CD — CD

DISP CLOCK Press

DVD Audio

(Group number) (Track number)

AUDIO 01–02 → 02 00 : 00' 01 → 10 : 22 → DVD AUDIO

(Track number) (Elapsed playback time) (Clock display) (Display off)

DVD Video

(Title number) (Chapter number)

VIDEO 01–003 → 003 00 : 00' 01 → 10 : 22 → DVD VIDEO

(Chapter number) (Elapsed playback time) (Clock display) (Display off)

Video CD

VCD → 00 : 00' 01 → 10 : 22 → VCD

(Elapsed playback time) (Clock display) (Display off)

CD

(Track number)

CD 01 0' 01 → 10 : 22 → CD

(Elapsed playback time) (Clock display) (Display off)

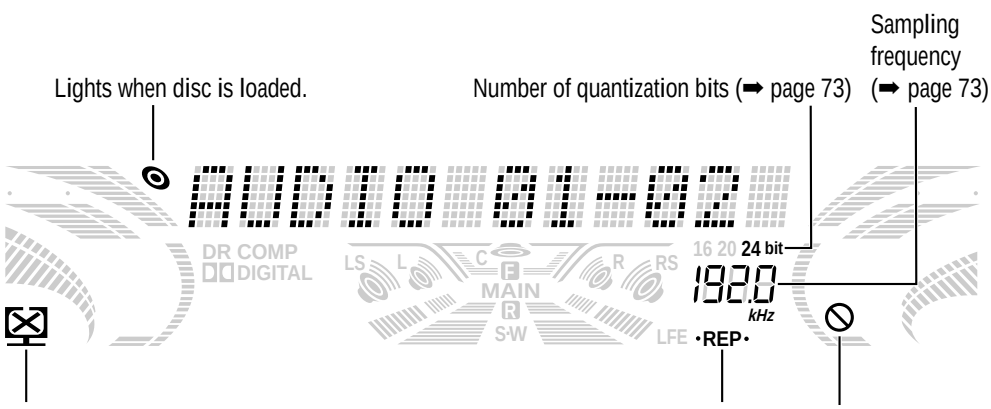

Lights when car is moving.
(TV picture does not appear. Turns off when car is stopped and parking brake is applied.)

Lights/blinks during repeat playback.

Blinks when attempt is made to perform an operation prohibited by this unit or the disc.

Notes:

- When the disc is removed while the unit is in DVD/video CD/CD mode, the power turns off.
- If a disc is inserted while the power is off, the power turns on.
- During playback of Dolby Digital encoded material, setting "DR COMP ON" will make comparatively quiet sounds easier to hear. (➡ page 50)

Fast Forward/Fast Backward

DVD AUDIO DVD VIDEO VIDEO CD CD

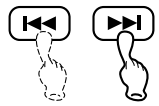

- The speed changes if the button is held down (maximum 20 times as fast as normal speed). Playback begins at the point where the button is released.

Go to Beginning

DVD AUDIO DVD VIDEO VIDEO CD CD

- Each time one of these buttons is pressed, the player jumps to the start of the appropriate track (chapter).
- If the backward button is pressed once, the player returns to the start of the track (chapter) that is currently being played.

Note:

- When playing a DVD audio (video), there are cases where it is not possible to return to the start of a track (chapter) that spans 2 groups (titles).

Pause

DVD AUDIO DVD VIDEO VIDEO CD

(During playback)

- "PAUSE" is displayed and the playback pauses.

To resume normal playback:

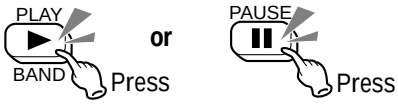

Repeat

DVD AUDIO DVD VIDEO VIDEO CD CD

Chapter/Track Repeat

(During playback)

- "REP" lights.

DVD audio/video CD/CD

"TRACK REP ON" is displayed and the track that is currently being played repeats.

DVD video

"CHAPT REP ON" is displayed and the chapter that is currently being played repeats.

To resume normal playback:

Group/Title Repeat

(During playback)

- "REP" blinks.

DVD audio

"GROUP REP ON" is displayed and the group that is currently being played repeats.

DVD video

"TITLE REP ON" is displayed and the title that is currently being played repeats.

To resume normal playback:

Starting Playback from a Specific Group/Track/Title/Chapter

DVD AUDIO DVD VIDEO

① (During playback)

Select the input mode.

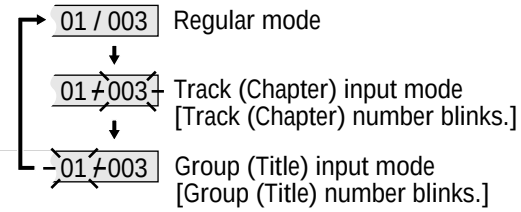

②

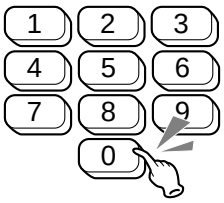

Input the desired group/track/title/chapter number.

③

- Playback starts.

Note:
(DVD audio only)
- Press and hold **[GRP]** for more than 2 seconds, and the player jumps to the start of the next group.

Playing back a bonus group (*)
(DVD audio only)

* This is a group that contains only DVD audio software, and cannot be played without entering a security code. (Some software does not include bonus groups.) For details, refer to the guide provided with your disc.

① Select the group number input mode.

② Input the bonus group number.
- "KEY NUM :----" is displayed.

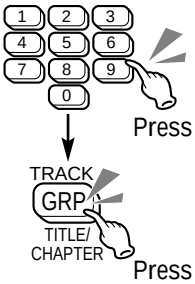

③ Input the security code.

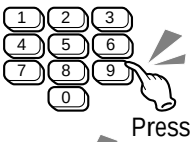

④ Finalize selection.

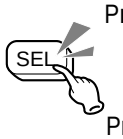

To return to normal mode:

To re-input the number:

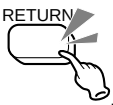

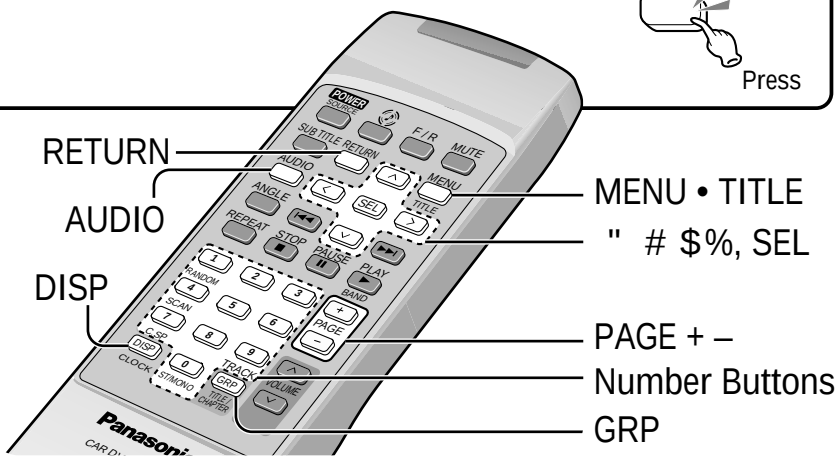

DVD Audio·Video/Video CD/CD Basics
(continued)

Slow Playback

DVD VIDEO VIDEO CD

① (During playback)

- "PAUSE" is displayed.

②

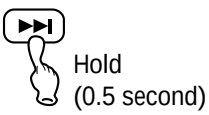

- "SLOW PLAY" is displayed.
- Playback is at approximately 1/3 normal speed.

To pause:

To resume normal playback:

Note:
- Reverse slow playback is not possible.

Switching the Subtitle Language

DVD VIDEO

(During playback)

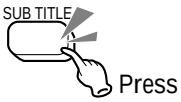

- Initially, the subtitle language is the language that is set in the initial settings. (If this language has not been recorded, the language that is displayed is determined by the disc.)

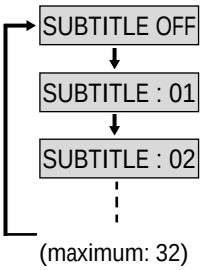

Notes:
- If you press **[DISP]**, or do not perform any operation for 2 seconds, the unit returns to regular mode.
- The number of subtitle languages depends on the disc.
- If no subtitles are recorded on the disc, "⃠" lights.
- It may not be possible to switch the subtitles unless the unit is at the DVD menu (➡ page 35) or is at the initial settings (➡ page 38).
- There may be a brief delay before the subtitles appear.

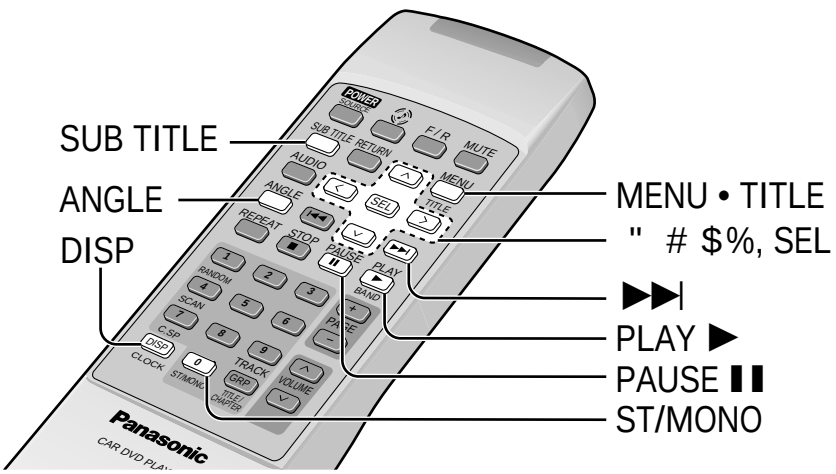

Switching the Audio Language

DVD AUDIO DVD VIDEO

(During playback)

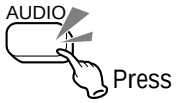

DVD audio

AUDIO : 01 ↕ AUDIO : 02

(maximum: 2)

- This operation will sometimes cause the player to jump to the beginning of the track that is currently being played.

DVD video

AUDIO : 01 → AUDIO : 02 → ...

(maximum: 8)

Notes:

- If you press **[DISP]**, or do not perform any operation for 2 seconds, the unit returns to regular mode.
- The number of audio languages depends on the disc. (Some discs have only one language.)
- It may not be possible to switch languages unless the unit is at the DVD menu or is at the initial settings (➡ page 38).

DVD Menu

DVD AUDIO DVD VIDEO

Use this menu during playback to select content, audio, subtitles, etc., from a menu (the DVD menu) that is unique to each disc.

① (During playback)

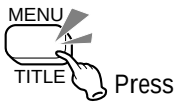

- "PLAY" is displayed and the DVD menu appears on the screen. (Pressing this button again causes playback to start at the scene from which the DVD menu was called.)

Example)

DVD MENU
1 SUBTITLE
2 AUDIO
3 ANGLE

To return to the previous menu screen:

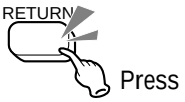

Note:

- DVD menu content and operations depend on the disc. For details, refer to the guide provided with your disc.

②

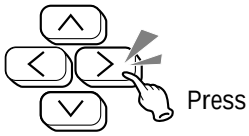

(Select item)

→

(Finalize selection)

Still Forward/Backward

DVD AUDIO

It is possible to move only the still image forward or backward while music continues to play.

: forward

: backward

- The images change each time the button is pressed.

To skip to a specific image:

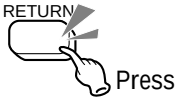

Note:

- Some discs restrict scanning forward or backward through still images.

Switching the Angle

DVD VIDEO

(During playback)

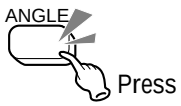

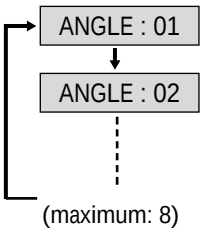

Notes:

- If you press **[DISP]**, or do not perform any operation for 2 seconds, the unit returns to regular mode.
- If multiple angles are not recorded on the disc, "⃠" lights.

Title Menu

DVD VIDEO

① (During playback)

- "PLAY" is displayed and the title menu appears on the screen.
  (Pressing this button again causes playback to start at the scene from which the title menu was called.)

②

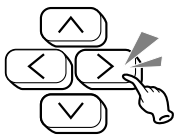

Example)

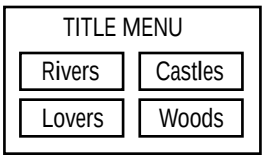

Switching between Stereo and Monaural

VIDEO CD

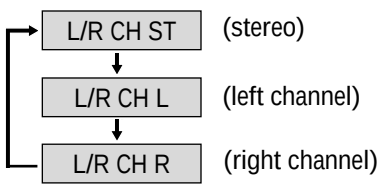

- When either "L/R CH L" or "L/R CH R" is selected, the left or right channel audio is output on both the left and right speakers.

DVD Audio·Video/Video CD/CD Basics
(continued)

1 Select the setting menu

(While stopped)

AUDIO 01-02 (Regular mode)
↓
MENU LAN (➡Next page)
↓
SUBTITLE LAN (➡Next page)
↓
AUDIO LAN (➡Next page)
↓
TV SELECT (➡Next page)
↓
TV ASPECT (➡Next page)
↓
TV MODE(4:3) (➡Next page)

(LAN: LANGUAGE)

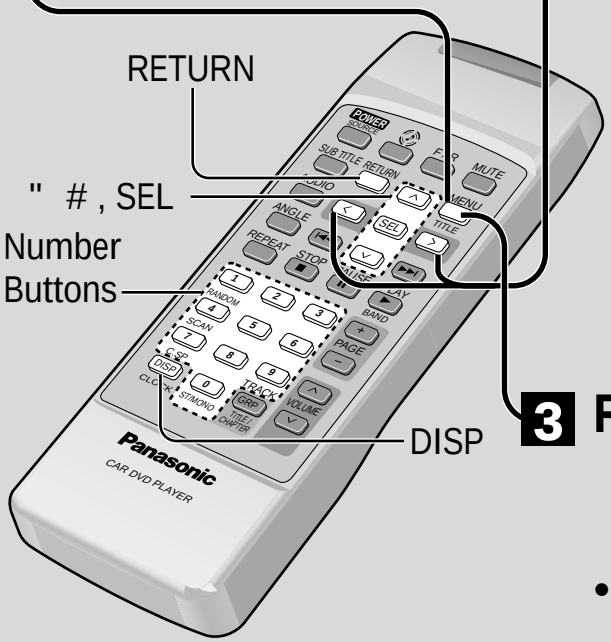

2 Make setting

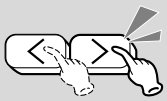

Notes:
- If **[DISP]** is pressed, the unit returns to regular mode. (The setting is ignored.)
- If the language that was set is not recorded on the disc, the language determined by the disc is selected.

In other cases (MENU LAN, SUBTITLE LAN, AUDIO LAN)

①

- "CODE : – – – –" is displayed.

②

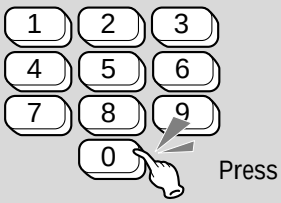

Input the four digit language code.
(➡ page 71)

③

Finalize selection.

To input the number again:

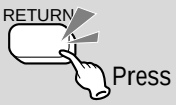

3 Return to the regular mode

- The setting is completed and the disc will start over from the beginning.

CD Changer Basics

Connect a CD changer (CX-DP88, etc.; sold separately).

1 Select "CHANGER"

POWER
SOURCE

Press

- A disc is played back.

If "NO DISC" is displayed:
Load a disc in the changer (magazine).

When using the main unit

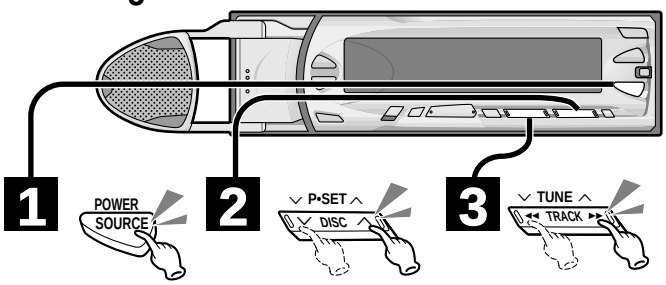

2 Select the disc

(next disc)

(previous disc)

Press

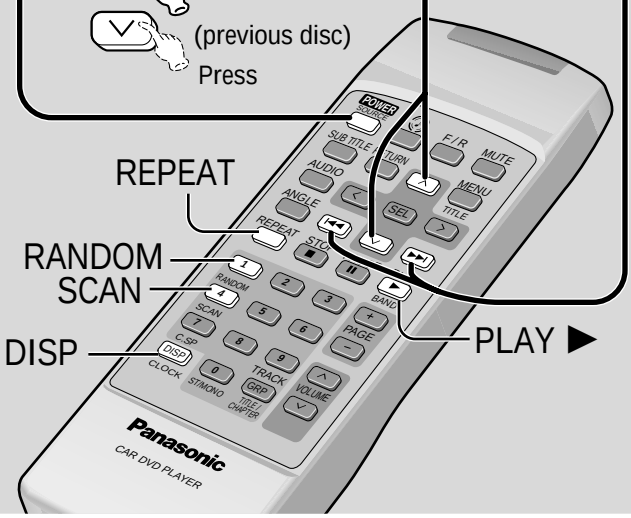

3 Select the track

(jump to the beginning of the next track)

Press

(jump to the beginning of the current track, and then to previous tracks)

Press

Fast Forward/Fast Backward:

Hold

(Backward) (Forward)

Notes:
When you insert a magazine into the changer

- While the unit is turned off, the unit turns on and enters CHANGER mode. (When a magazine is pulled out, the unit turns off.)
- While another sound source is selected, the unit switches to CHANGER mode.

Changing the Display

DISP
CLOCK

Press

Normal display → Clock display → Display off

(track number/ disc number/ elapsed playback time)

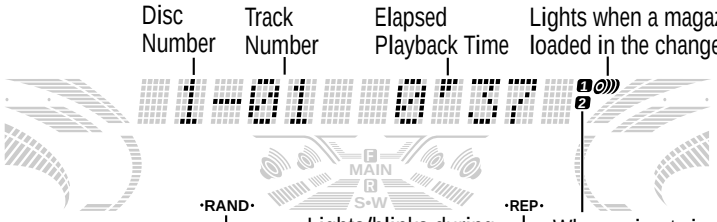

Lights/blinks during random playback.

Lights/blinks during repeat playback.

When using twin changers, the number corresponding to the selected changer lights.

MENU LAN

DVD AUDIO DVD VIDEO

Menu language

MENU LAN1 : en (English) ↔ MENU LAN2 : fr (French) ↔ MENU LAN3 : – – (Other)(➡ page 38)

SUBTITLE LAN

DVD VIDEO

Subtitle language

SUBT LAN1 : en (English) ↔ SUBT LAN2 : fr (French) ↔ SUBT LAN3 : sp (Spanish) ↔ SUBT LAN4 : – – (Other)(➡ page 38) ↔ SUBT LAN : OFF (No subtitles)

AUDIO LAN

DVD AUDIO DVD VIDEO

Audio language

AUDIO LAN1 : en (English) ↔ AUDIO LAN2 : fr (French) ↔ AUDIO LAN3 : sp (Spanish) ↔ AUDIO LAN4 : – – (Other) (➡ page 38)

TV SELECT

DVD AUDIO

TV connection setting

This setting prevents playback from being stopped by the menu screen if a monitor is not connected.

YES	The TV image is displayed. (Select this setting when a monitor is connected.)
NONE	No TV image is displayed. (Select this setting when no monitor is connected.)

TV ASPECT

DVD AUDIO DVD VIDEO VIDEO CD

TV aspect ratio

16 : 9	Use this setting when a wide-screen TV is connected. ● Wide-screen video can be played on the full screen.
4 : 3	Use this setting when a conventional TV is connected.

TV MODE (4:3)

DVD AUDIO DVD VIDEO VIDEO CD

TV picture mode (4 : 3)

Set this when playing wide-screen video on a conventional-size (4 : 3) TV.

PAN & SCAN	Plays wide-screen video in Pan & Scan mode (in which the left and right edges of the screen are cut off).
LETTER BOX	Plays wide-screen video in letterbox mode (in which black bands appear at the top and bottom of the screen).

Note:

● If “Pan & Scan” or “Letterbox” is already set in the software, this setting is ignored.

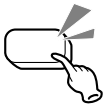
Indicates pressing a button.

Indicates pressing a button for an extended period of time.

Scan Play

Track Scan
Plays approximately 10 seconds of each of the tracks on the discs in the changer in sequence.

Press

- The elapsed playback time display begins to blink.
- Once a complete cycle through all the tracks on the discs in the changer has been completed, the unit begins playing from the start of the first track.

To cancel:

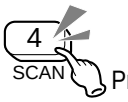

Press

Disc Scan
Plays approximately 10 seconds of the first track on each of the discs in the changer in sequence.

Hold (2 seconds)

- The disc number display begins to blink.
- Once a complete cycle through all the discs in the changer has been completed, the unit begins playing from the start of the first disc.

To cancel:

Hold (2 seconds)

Repeat Playback

Repeating a track
The track currently being played is repeated.

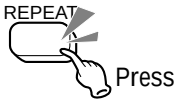

Press

- "REP" lights.

To cancel:

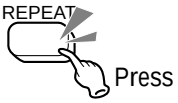

Press

Repeating a disc
The disc currently being played is repeated.

Hold (2 seconds)

- "REP" blinks.

To cancel:

Hold (2 seconds)

Random Play

Selecting tracks from all discs
A track selected at random from among all of the discs in the changer is played back.

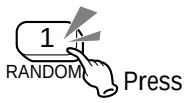

Press

- "RAND" lights.

To cancel:

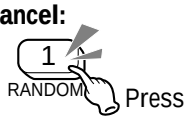

Press

Selecting tracks from one disc
A track selected at random from the current disc being played is played back.

Hold (2 seconds)

- "RAND" blinks.

To cancel:

Hold (2 seconds)

Using Two Changers (Dual changers)

Use the dual changer control unit (CA-CD55; sold separately) to connect the 2 CD changers to this unit. (➡ page 64)

Press

CHANGER 1
↕
CHANGER 2

- The selected changer number (either 1 or 2) lights.

Caution:

- If only one changer will be connected to the dual changer control unit, connect that changer to the CHANGER 1 jacks.

Setting Up the Sound

1 Select the setting menu

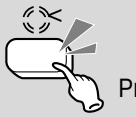

Press

- AUDIO 01-02 (Regular mode)
- PROLOGIC SEL (➡ Next page)
  (Only when “LS” or “RS” does not light.)
- DOWN MIX SEL (➡ Next page)
  (DVD Audio•Video/DTS CD Only)
- LOUD SEL (➡ Next page)
- BASS SEL (➡ page 45)
- TREBLE SEL (➡ page 45)
- BAL // FAD (➡ page 45)
- CENTER VOL (➡ page 45)
- SUB•WFR VOL (➡ page 45)

When using the main unit

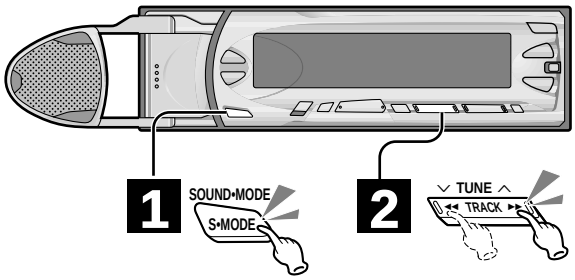

- AUDIO 01-02
- PROLOGIC SEL
- DOWN MIX SEL
- LOUD SEL
- CENTER VOL
- SUB•WFR VOL

2 Make settings

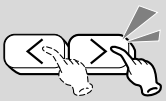

Press

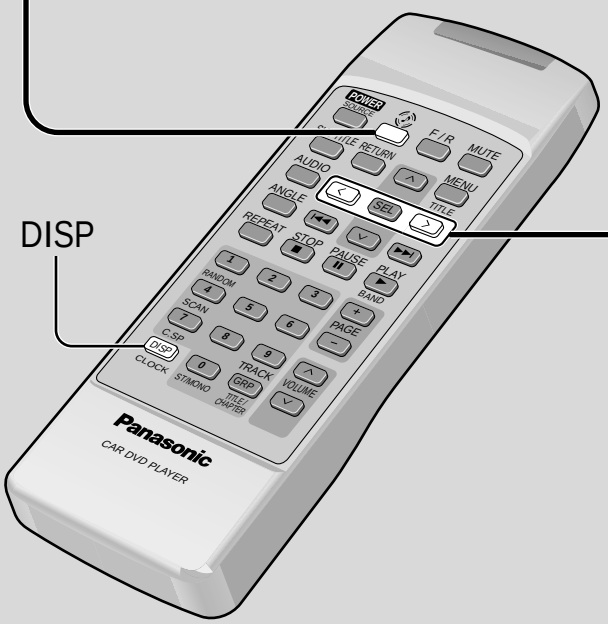

Notes:

- Press **[DISP]** to complete the setting procedure. (The unit returns to regular mode.)
- The unit completes the setting procedure if no buttons are pressed for 10 seconds. (The unit returns to regular mode.)

Setting Up the Sound (continued)

1 Select the setting menu

Press

- AUDIO 01-02 (Regular mode)
- PROLOGIC SEL (➡ page 43) (Only when “LS” or “RS” does not light.)
- DOWN MIX SEL (➡ page 43) (DVD Audio•Video/DTS CD Only)
- LOUD SEL (➡ page 43)
- BASS SEL (➡ Next page)
- TREBLE SEL (➡ Next page)
- BAL // FAD (➡ Next page)
- CENTER VOL (➡ Next page)
- SUB•WFR VOL (➡ Next page)

When using the main unit

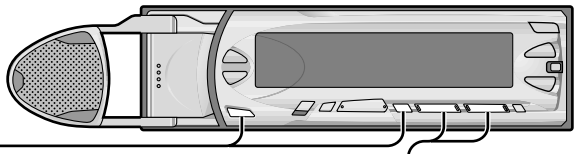

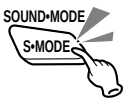

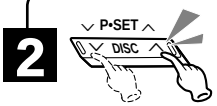

- AUDIO 01-02
- PROLOGIC SEL
- DOWN MIX SEL
- LOUD SEL
- CENTER VOL
- SUB•WFR VOL

- AUDIO 01-02
- BASS SEL
- TREBLE SEL
- BAL // FAD

2 Make settings

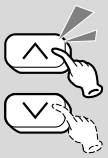

Press

or

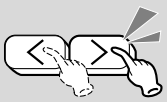

Press

DISP

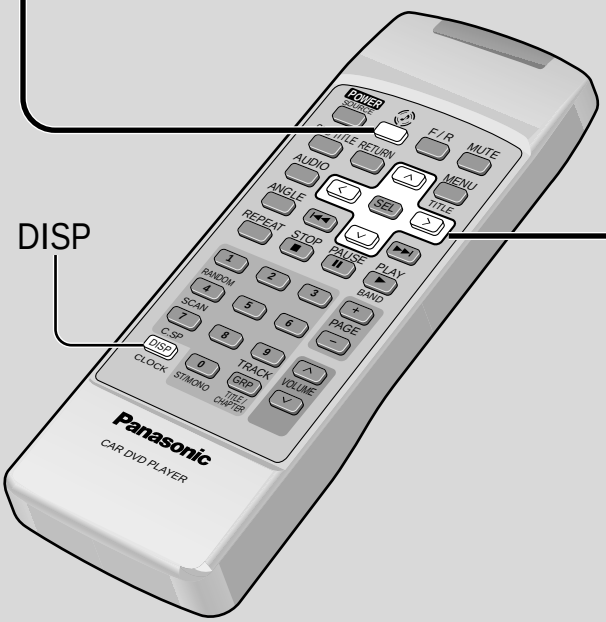

Notes:

- Press **[DISP]** to complete the setting procedure. (The unit returns to regular mode.)
- The unit completes the setting procedure if no buttons are pressed for 10 seconds. (The unit returns to regular mode.)

Signal Format Display

This display lights in accordance with the digital signals that are input for each speaker channel. (The signal formats that are displayed will vary according to the software.)

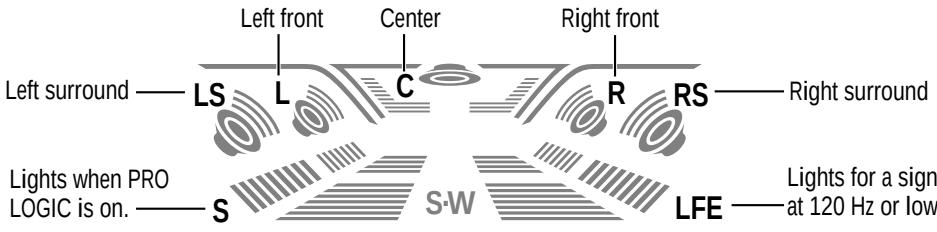

PROLOGIC SEL

Listening to Surround Sound

DOLBY SURROUND

2-channel signals from a DVD or a CD can be output in surround sound by using the center speaker.

PROLOGIC OFF	2-channel stereo playback (Normal sound) ● Not output from the center speaker.
PROLOGIC ON	Surround playback ● Surround sound is output by using the center speaker. ● "DD PRO LOGIC" lights.

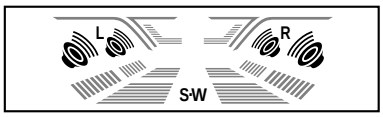

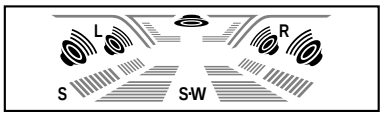

DOWN MIX SEL

Combining the Speaker Output

DOLBY DIGITAL

DIGITAL dts SURROUND

When listening to Dolby Digital or dts encoded material (the "DD DIGITAL" or "dts" indicator will light), the signals for each speaker channel can be combined and output as stereo. (Down mix)

DOWN MIX OFF	Recorded signal format (Example: 5.1-channel surround playback)
DOWN MIX ON	Down mix (2-channel stereo playback) Use this setting when front speakers only are connected. ● The C, LS, and RS signals are combined with and output through L and R.

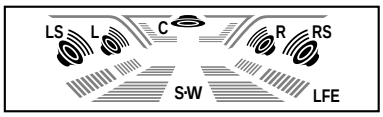

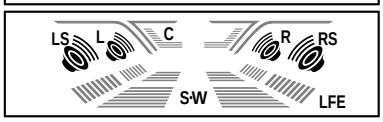

Note:

● If this setting is changed while playing a disc, the disc will start over from the beginning.

LOUD SEL

Loudness

This function boosts the bass and treble.

LOUD OFF	Normal sound
LOUD ON	Boosts the bass and treble when playing. ● "LOUD" lights.

BASS SEL

Adjusting the Bass
(Adjustable range: −12 to +12 dB)

["]: Increases the bass.
[#]: Decreases the bass.

BASS +6 dB

TREBLE SEL

Adjusting the Treble
(Adjustable range: −12 to +12 dB)

["]: Increases the treble.
[#]: Decreases the treble.

TREBLE +6 dB

BAL // FAD

Adjusting the Front/Rear/Left/Right Balance
(Adjustable range: 15 for each)

[$]: Increases the right side.
[%]: Increases the left side.
["]: Increases the front.
[#]: Increases the rear.

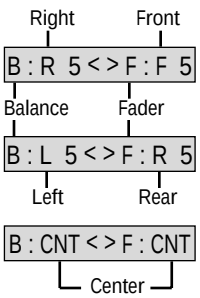

CENTER VOL

Adjusting the Center Speaker Volume
(Adjustable range: −∞, −10 to +10 dB)

["]: Increases the level.
[#]: Decreases the level.

CENTER +6 dB

Note:
- Setting "−∞" makes no sounds to output.

SUB•WFR VOL

Adjusting the Subwoofer Volume (When Subwoofer is set.)
(Adjustable range: −∞,−10 to +10 dB)

Connect a subwoofer (sold separately).

["]: Increases the level.
[#]: Decreases the level.

SUB•WFR +6 dB

Note:
- Setting "−∞" makes no sounds to output.

Setting Other Functions

1 Select the setting menu

① **Switch to setting mode.**

SEL

Hold (2 seconds)

② **Select the setting menu.**

SEL

Press

AUDIO 01-02 (Regular mode)
↓
SIGNAL SEL (➡ Next page)
↓
MUTING SEL (➡ Next page)
↓
MUTE KEY SEL (➡ page 49)
↓
CONTRAST SEL (➡ page 49)
↓
S-LED SEL (➡ page 49)
↓
TILT SELECT (➡ page 49)

When using the main unit

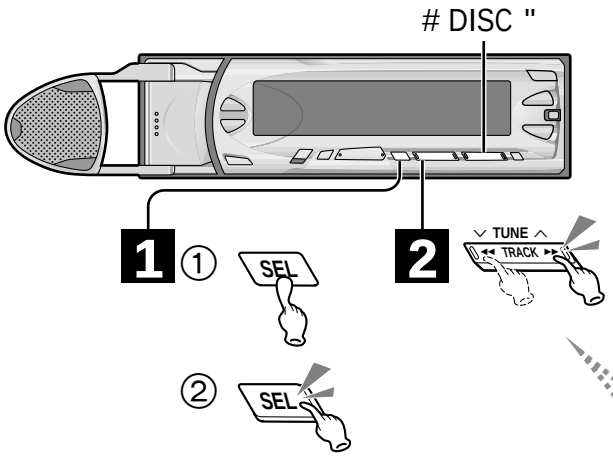

2 Make settings

Press

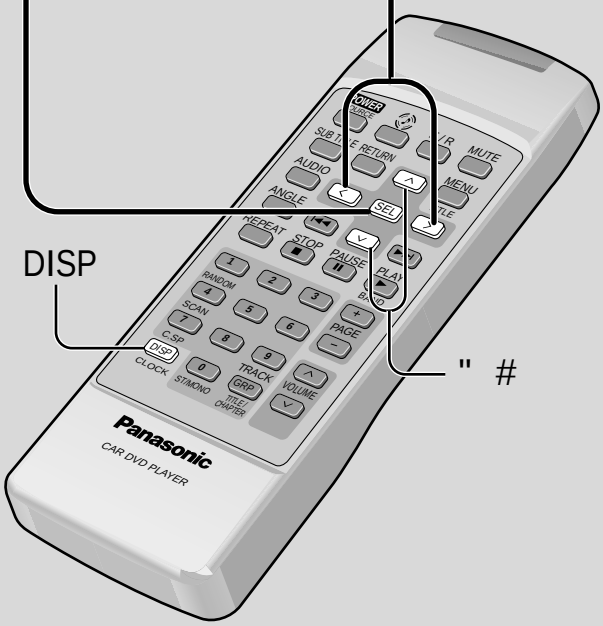

Notes:

- Press **[DISP]** to complete the setting procedure. (The unit returns to regular mode.)
- The unit completes the setting procedure if no buttons are pressed for 10 seconds. (The unit returns to regular mode.)

Setting Other Functions (continued)

1 Select the setting menu

When using the main unit

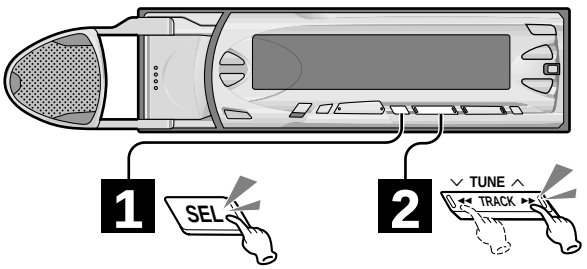

① **Switch to setting mode.**

Hold (2 seconds)

② **Select the setting menu.**

Press

AUDIO 01-02 (Regular mode)
↓
SIGNAL SEL (➡ page 47)
↓
MUTING SEL (➡ page 47)
↓
MUTE KEY SEL (➡ Next page)
↓
CONTRAST SEL (➡ Next page)
↓
S-LED SEL (➡ Next page)
↓
TILT SELECT (➡ Next page)

2 Make settings

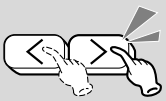

Press

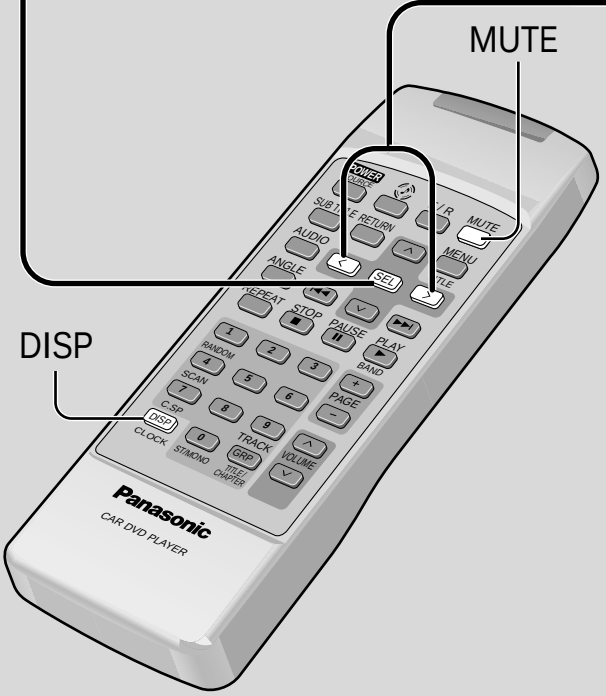

Notes:

- Press **[DISP]** to complete the setting procedure. (The unit returns to regular mode.)
- The unit completes the setting procedure if no buttons are pressed for 10 seconds. (The unit returns to regular mode.)

Indicates pressing a button.

Indicates pressing a button for an extended period of time.

SIGNAL SEL

Signal Sound/Signal Beep (The sound of button operation)

You can select to have different signal sounds output from the center speaker whenever you press a button. You can also set the volume of the signal sound.

- SIGNAL SOUND — Sets the operation sound as <Signal Sound> (a different sound for each operation).
- SIGNAL BEEP 1 — Sets the operation sound as <Signal Beep 1>.
- SIGNAL BEEP 2 — Sets the operation sound as <Signal Beep 2>.
- SIGNAL BEEP 3 — Sets the operation sound as <Signal Beep 3>.
- SIGNAL BEEP OFF — Turns off the operation sound.

Adjusting the volume:

: Increases the volume

: Decreases the volume (Main unit: 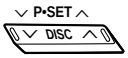

)

(Adjustable range: LEV 1 to LEV 3)

Note:

- A sound is output when the power is turned on or off only if “SIGNAL SOUND” is set.

MUTING SEL

Making It Easier to Hear Voice Directions from the Car Navigation System (In future use)

You can select to have this unit reduce its volume when the car navigation system is giving voice directions.

Connect a car navigation system (sold separately).

- MUTING ON — Decreases the volume of this unit to “0” (silence) when the car navigation system gives voice directions.
- MUTING HALF — Decreases the volume of this unit by approximately 1/10 when the car navigation system gives voice directions.
- MUTING OFF — Does not change the volume of this unit when the car navigation system gives voice directions.

- When the car navigation system gives voice directions, the message “MUTING ✳✳✳”, indicating the navimute setting, is displayed.

MUTE KEY SEL

MUTE Button Setting

You can select how much to lower the volume when **[MUTE](ATT)** is pressed.

MUTE KEY	When **[MUTE](ATT)** is pressed, the volume goes to “0” (silence). <MUTE>
ATT KEY	When **[MUTE](ATT)** is pressed, the volume is reduced to approximately 1/10 of its original volume. <ATT>

CONTRAST SEL

Making the Display Easier to See

The display of this unit can be made easier to see by adjusting the display contrast (the difference between the bright and dark portions). (Adjustable range: Lv1 to 5)

[$**]**: Increases the contrast level.
[%**]**: Decreases the contrast level.

CONTRAST Lv 3

- The higher the level, the greater the contrast.

S-LED SEL

Security Indicator

The security indicator blinks while the removable face plate is removed from this unit.

S-LED ON	The indicator blinks when the panel is removed. The panel removal alarm will be active.
S-LED OFF	The indicator does not blink when the panel is removed. The panel removal alarm will be non-active.

TILT SELECT

Using the Panel without Changing the Tilt

TILT ON	Permits adjustment of the panel tilt.
TILT OFF	Does not permit adjustment of the panel tilt.

Useful Functions

1 Select the setting menu

① Switch to setting mode.

Hold (2 seconds)

② Select the setting menu.

Press

AUDIO 01-02 (Regular mode)
↓
DR COMP SEL (➡ Next page)
(Dolby Digital encoded material only)
↓
SP TYPE SEL (➡ page 25)
↓
(While stopped)
SP LEVEL SEL (➡ page 25)
↓
SP DELAY (➡ page 25)
[Dolby Digital encoded material or when "PROLOGIC ON" (➡ page 43) is set only]

When using the main unit

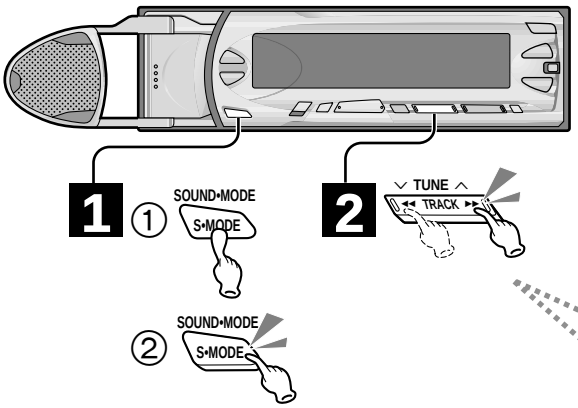

2 Make settings

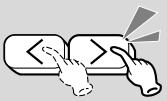

Press

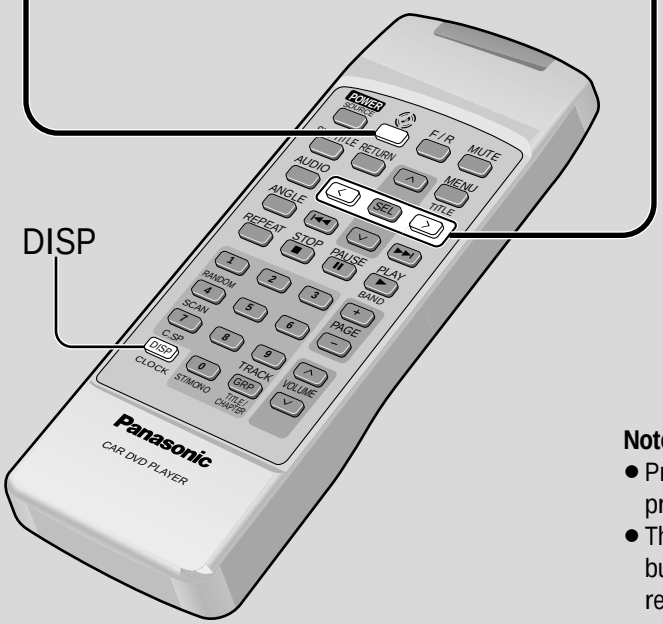

Notes:

- Press **[DISP]** to complete the setting procedure. (The unit returns to regular mode.)
- The unit completes the setting procedure if no buttons are pressed for 10 seconds. (The unit returns to regular mode.)

Useful Functions (continued)

Adjusting the Display Brightness (Dimmer)

Press

DIMMER LEV 3	Illumination is bright. (Default: When the car's small light is off.)
DIMMER LEV 2	Illumination is moderate. (Default: When the car's small light is on.)
DIMMER LEV 1	Illumination is dim.

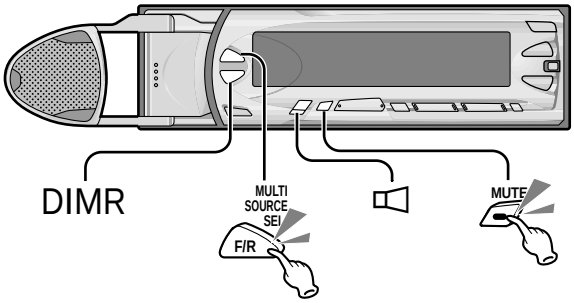

To cancel:

Note:

- **[DIMR]** and **[F/R]** on the main unit are located on the panel behind the center speaker. Press **[ ]** to open the speaker in order to access these buttons.

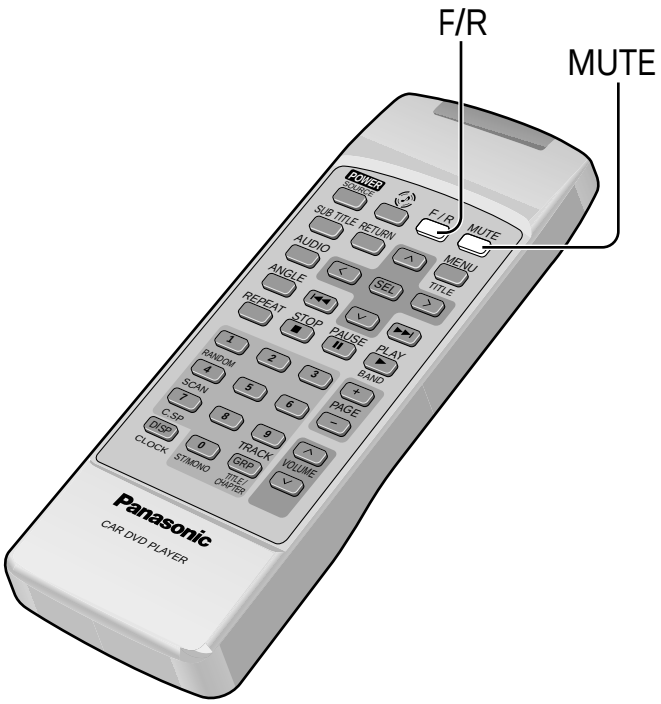

DR COMP SEL

Dynamic Range Compression

By compressing the range of the playback level (the dynamic range), it is possible to maintain the impact of audio even at low volumes.

This function only works with Dolby Digital encoded material.

DR COMP OFF — Does not compress the dynamic range.

DR COMP ON — Compresses the dynamic range.

- "DR COMP" lights.

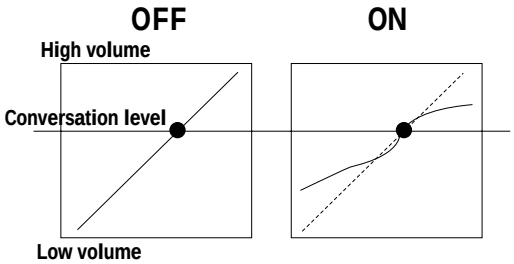

Note:

- When it is difficult to hear comparatively quiet sounds (such as movie dialogue), setting "DR COMP ON" will make those sounds easier to hear.

Lowering the Volume Temporarily (Mute/Attenuator)

The extent to which the volume is lowered depends on the MUTE/ATT setting. (➡ page 49)

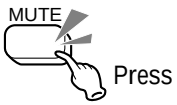

When MUTE is set:

MUTE OFF	Normal volume
MUTE ON	Volume goes to “0” (silence).

When ATT is set:

ATT OFF	Normal volume
ATT ON	Volume goes to 1/10 of what it was.

- When Mute/Attenuate is “ON”, “MUTE” blinks and you can not operate except for some buttons.

Listening to Separate Sources on the Front and Rear Speakers

Multi Source Selector
It is possible to simultaneously listen to different sources on the front and rear speakers (excluding the tuner).

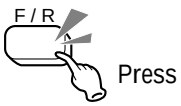

FRONT MAIN	For front speaker operation
REAR MAIN	For rear speaker operation

- “F MAIN” or “R MAIN” lights (or blinks while an operation is in progress).
- No sound is output from the center speaker and the subwoofer.
- The following settings can be made for the front and rear speakers separately:
  - Volume
  - Source
  - Sound settings (loudness, bass, treble, balance) (➡ pages 43, 45)

To cancel:

- The volume, source, and sound settings for the front become the settings for the whole system.
- If the F/R mode is cancelled when the front mode is off, the power turns off.
- Turning off the power does not cancel the separate front/rear settings.

Notes:

- The separate front/rear settings are not valid when the unit is in TUNER mode.
- Pressing **[MUTE](ATT)** mutes the volume of both sets of speakers to “0” (or “1/10”).
- The speaker output setting automatically becomes “DOWN MIX ON”. (➡ page 43)

FRONT MAIN ↔ REAR MAIN

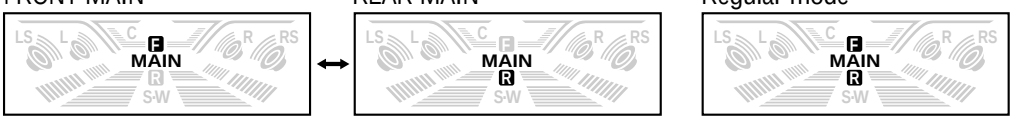

Regular mode

Installation

WARNING

The installation information is designed for experienced installers and is not intended for non-technical individuals. It does not contain warnings or cautions of the potential dangers involved in attempting to install this product.

Any attempt to install this product in a motor car by anyone other than a qualified installer could cause damage to the electrical system and could result in serious personal injury or death.

❒ Overview

This product should be installed by a professional. However, if you plan to install this unit yourself, your first step is to decide where to install it. The instructions in these pages will guide you through the remaining steps:
(Please refer to the "WARNING" statement above.)

- Identify and label the car wires.
- Connect the car wires to the wires of the power connector.
- Install the unit in the dash.
- Check the operation of the unit.

If you encounter problems, please consult your nearest professional installer.

Caution: This unit operates with a 12 volt DC negative ground auto battery system only. Do not attempt to use it in any other system. Doing so could cause serious damage.

Before you begin installation, look for the following items which are packed with your unit.

- **Warranty Card**…Fill this out promptly.
- **Panasonic Servicenter List for Service Directory** …Keep for future reference in case the unit needs servicing.
- **Installation Hardware**…Needed for in-dash installation.

❒ Installation Hardware

No.	Item	Diagram	Qty	No.	Item	Diagram	Qty
①	Shipping Bracket (For installing the Power Amplifier Unit)		2	⑦	Rear Support Strap		1
②	Power Amplifier Unit	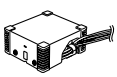	1	⑧	Tapping Screw (5 mmϕ×16 mm)		1
③	Velcro Tape		1	⑨	Mounting Bolt (5 mmϕ)		1
④	Binding Screw (5 mmϕ×12 mm)		1	⑩	Power Connector		1
⑤	Mounting Collar	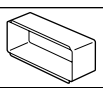	1	⑪	Removable Face Plate Case		1
⑥	Hex. Nut (5 mmϕ)		1	⑫	Trim Plate		1

❒ Connect All Leads

Now that you have identified all the wires in the car, you're ready to begin connecting them to the stereo unit wires. The connection diagram (➡ page 62) shows the proper connections and color coding of the leads.
We strongly recommend that you test the unit before making a final installation.
You can set the unit on the floor and make temporary connections to test the unit. Use electrical tape to cover all exposed wires.

Important: Connect the red power lead last, after you have made and insulated all other connections.

Ground
Connect the black ground lead of the power connector to the metal car chassis.

Speakers
Connect the speaker wires. See the connection diagram (➡ page 62) for the proper hookups. Follow the diagram carefully to avoid damaging the speakers and the stereo unit.
The speakers used must be able to handle more than 45 watts of audio power. If using an optional audio amplifier, the speakers should be able to handle the maximum amplifier output power. Speakers with low input ratings can be damaged. Speaker impedance should measure 4–8 ohms, which is typically marked on most speakers. Lower or higher impedance speakers will affect output and can cause both speaker and stereo unit damage.

Caution: Never ground the speaker cords. For example, do not use a chassis ground system or a three-wire speaker common system. Each speaker must be connected separately using parallel insulated wires. If you are in doubt about how your car's speakers are wired, please consult your nearest professional installer.

Motor Antenna
Connect the car motor antenna lead to the blue motor antenna relay control lead.

Battery
Connect the yellow battery lead to the correct radio wire or to the battery fuse port on the fuse block.

Antenna
Connect the antenna by plugging the antenna lead into the antenna receptacle.

Product
Connect any optional product such as an amplifier, according to the instructions furnished with the product. Leave about 12 inches (30 cm) of distance between the speaker cords/amplifier unit and the antenna/antenna extension cord. Read the operating and installation instructions of any product you will connect to this unit.

Power
Connect the red power lead to the correct car radio wire or to the appropriate fuse port on the fuse block.
If the stereo unit functions properly with all these connections made, disconnect the wires and proceed to the final installation.

❒ Final Installation

Lead Connections
Connect all wires, making sure that each connection is insulated and secure. Bundle all loose wires and fasten them with tape so they won't fall down later. Now insert the stereo unit into the mounting collar.

Congratulations! After making a few final checks, you're ready to enjoy your new auto stereo system.

❒ Final Checks

1. Make sure that all wires are properly connected and insulated.
2. Make sure that the stereo unit is securely held in the mounting collar.
3. Turn on the ignition to check the unit for proper operation.

If you have difficulties, consult your nearest authorized professional installer for assistance.

❒ Required Tools

You'll need a screwdriver, a 1.5 volt AA battery, and the following:

12 V DC TEST BULB

ELECTRICAL TAPE

SIDE-CUT PLIERS

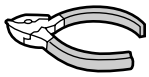

❒ Dashboard Specifications

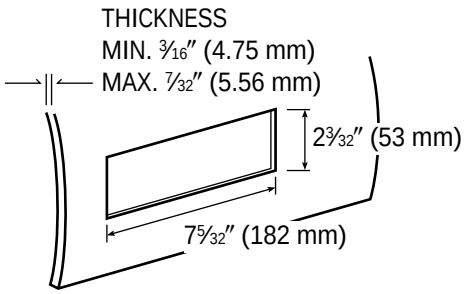

❒ Identify All Leads

The first step in installation is to identify all the car wires you'll use when hooking up your sound system.

As you identify each wire, we suggest that you label it using masking tape and a permanent marker. This will help avoid confusion when making connections later.

Note: Do not connect the power connector to the stereo unit until you have made all connections. If there are no plastic caps on the stereo hooking wires, insulate all exposed leads with electrical tape until you are ready to use them. Identify the leads in the following order.

Power Lead

If your car has a radio or is pre-wired for one:

Cut the connector wires one at a time from the plug (leaving the leads as long as possible) so that you can work with individual leads.

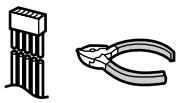

Turn the ignition on to the accessory position, and ground one lead of the test bulb to the chassis. Touch the other lead of the test bulb to each of the exposed wires from the cut radio connector plug. Touch one wire at a time until you find the outlet that causes the test bulb to light.

Now turn the ignition off and then on. If the bulb also turns off and on, that outlet is the car power lead.

If your car is not wired for an audio unit:

Go to the fuse block and find the fuse port for radio (RADIO), accessory (ACC), or ignition (IGN).

Battery Lead

If your stereo unit has a yellow lead, you will need to locate the car's battery lead. Otherwise you may ignore this procedure. (The yellow battery lead provides continuous power to maintain a clock, memory storage, or other function.)

If your car has a radio or is pre-wired for one:

With the ignition and headlights off, identify the car battery lead by grounding one lead of the test bulb to the chassis and checking the remaining exposed wires from the cut radio connector plug.

If your car is not wired for an audio unit:

Go to the fuse block and find the fuse port for the battery which is usually marked BAT.

Speakers

Identify the car speaker leads. There are two leads for each speaker which are usually color coded.

A handy way to identify the speaker leads and the speaker they are connected with is to test the leads using a 1.5 volt AA battery as follows.

Hold one lead against one pole of the battery and stroke the other lead across the other pole. You will hear a scraping sound in one of the speakers if you are holding a speaker lead.

If not, keep testing different lead combinations until you have located all the speaker leads. When you label them, include the speaker location for each.

Antenna Motor

If your car is equipped with an automatic power antenna, identify the car motor antenna lead by connecting one bulb tester lead to the car battery lead and touching the remaining exposed wires from the cut radio connector plug one at a time. You will hear the antenna motor activate when you touch the correct wire.

Antenna

The antenna lead is a thick, black wire with a metal plug at the end.

❒ Before Installation

Be sure to remove the Shipping Brackets ①.

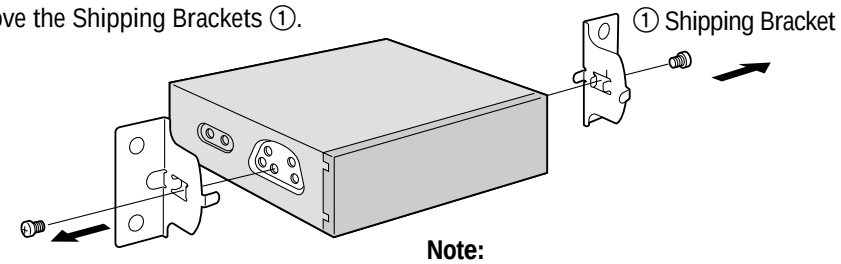

Note:

- The shipping brackets are sometimes used when installing the power amplifier unit. Do not discard the shipping brackets.

❒ Power Amplifier Unit

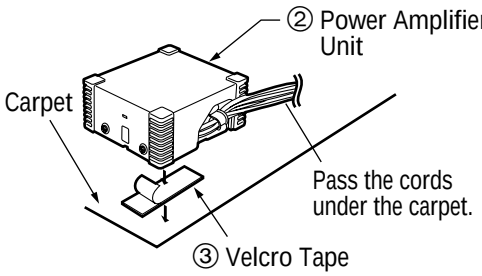

Using Velcro Tape ③, secure the Power Amplifier Unit ② underneath the passenger seat.

- Affix the adhesive-backed Velcro Tape ③ to the bottom of the power amplifier unit, and then place the unit on the carpet under the seat.

Note:

- Velcro Tape ③ may not adhere to some types of carpet.

When using the shipping bracket ①

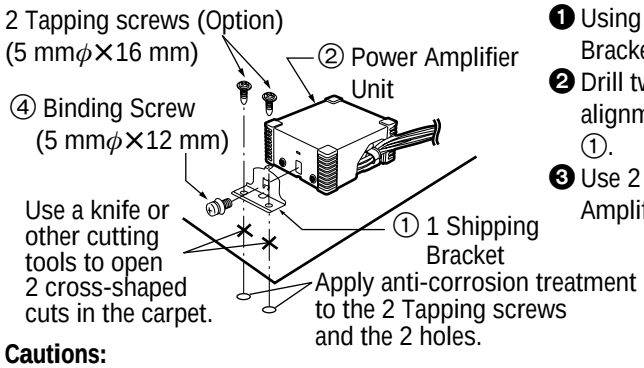

❶ Using a Binding Screw ④, attach a Shipping Bracket ① to the Power Amplifier Unit ②.
❷ Drill two 3.5 mm holes in the body of the car in alignment with the holes in the Shipping Bracket ①.
❸ Use 2 Tapping screws to attach the Power Amplifier Unit ② to the car.

Cautions:

- **Continuous use of this unit will cause the power amplifier unit to become hot. Be careful not to touch the power amplifier unit while it is in operation. Also, do not place other objects on top of the power amplifier unit.**
- **Do not install the power amplifier unit in a location where it may be subject to damage from overheating, such as next to a heater vent, or in a location exposed to direct sunlight such as the dashboard or the rear window deck.**
- **Do not install the power amplifier unit near a door or other locations where it may be readily exposed to water or stepped on.**
- **Clean away all oil, moisture, dust, etc., from the surface where the velcro tape is to be applied.**
- **When drilling holes in the car, make certain that you do not damage any pipes or wiring on the underside of the car.**
- **When installing the power amplifier unit, make sure that the cord is positioned in a location where it will not be pinched or damaged when the seat slides forward or backward.**

Installation (continued)

Preparation

- **Before installation, check the radio operation with antenna and speakers.**
- **Disconnect the cable from the negative ⊖ battery terminal (see caution below).**
- **Unit should be installed in a horizontal position with the front end up at a convenient angle, but not more than 30°.**

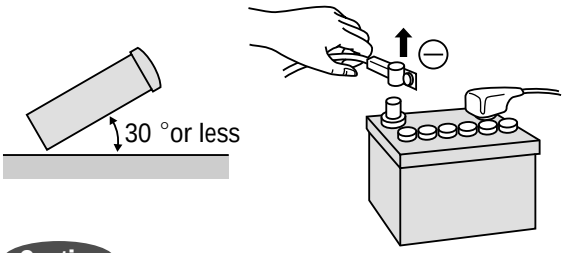

Caution

- Do not disconnect the battery terminals of a car with a trip or navigational computer since all user settings stored in memory will be lost. Instead take care with installing the unit to prevent shorts.

Dashboard Installation

Installation Opening

This unit can be installed in any dashboard having an opening as shown at right. The dashboard should be 4.5 mm−6 mm thick in order to be able to support the unit.

Installation Precautions

This product should be installed by a professional installer, if possible.

In case of difficulty, please consult your nearest authorized Panasonic Service Center.

1. This system is to be used only in a 12-volt, DC battery system (car) with negative ground.
2. Follow the electrical connections carefully. (➡ page 62)
   Failure to do so may result in damage to the unit.
3. Connect the power lead after all other connections are made.
4. Be sure to connect the battery lead (yellow) to the positive terminal ⊕ of the battery or fuse block (BAT) terminal.
5. Insulate all exposed wires to prevent short circuiting.
6. Secure all loose wires after installing the unit.
7. Please carefully read the operating and the installation instructions of the respective equipment before connecting it to this unit.

- We strongly recommend that you wear gloves for installation work to protect yourself from injuries.

First complete the electrical connections, and then check them for correctness. (➡ page 62)

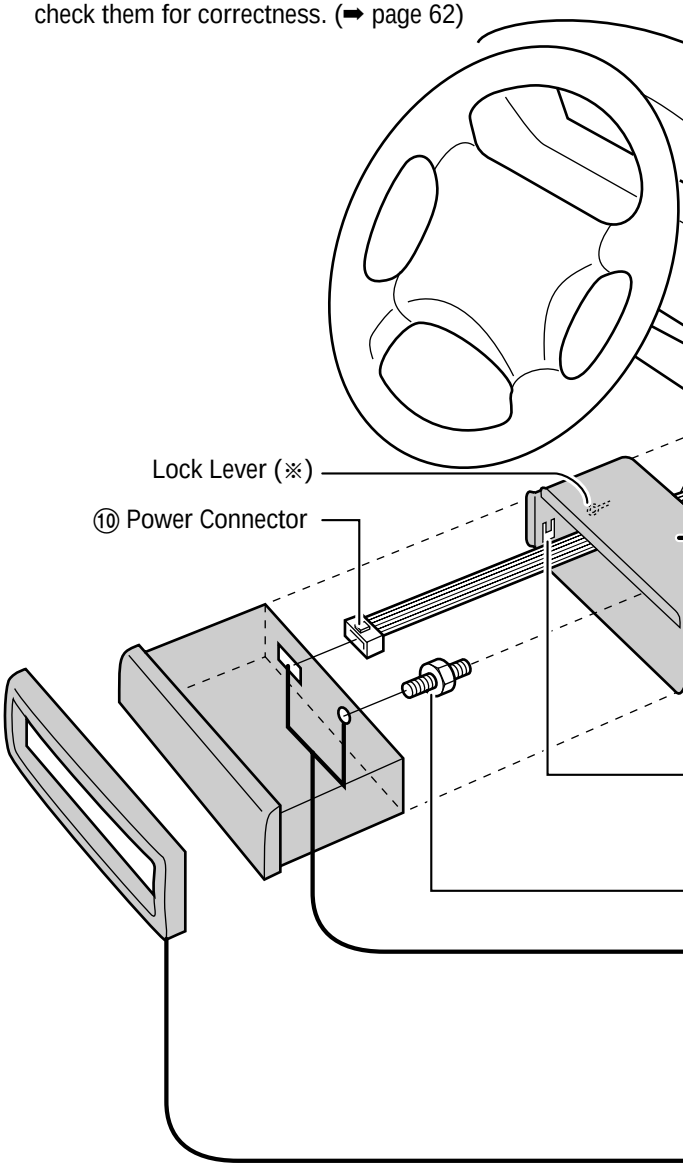

Remove the Unit

Preparation:
Make sure that the panel and the center speaker are closed.

1 **Remove the trim plate ⑫ with a screw driver.**

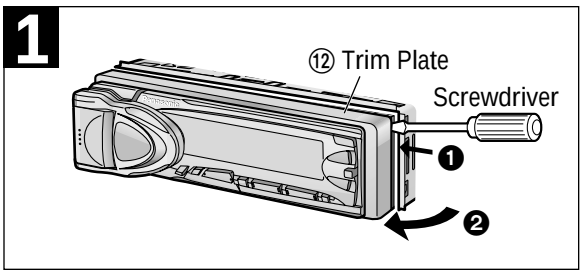

2 **Pull out the unit while pushing down the lock lever with a screw driver.**

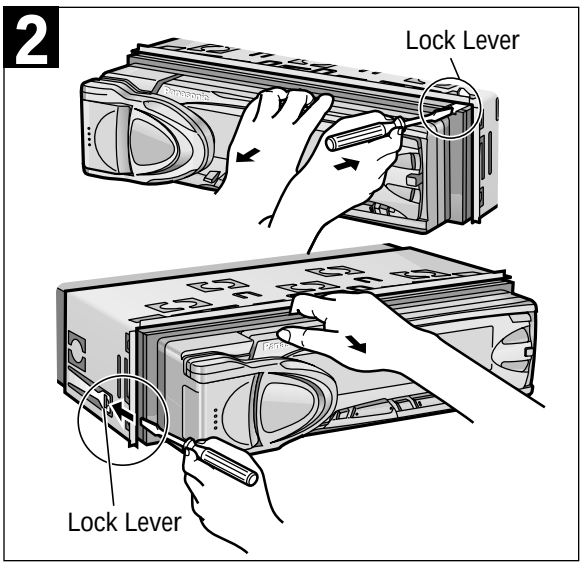

3 **Remove the unit pulling with both hands.**

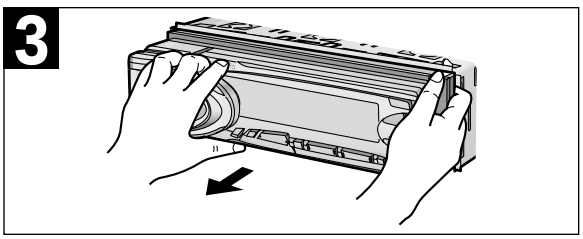

- When bending the mounting tabs of the mounting collar with a screwdriver, be careful not to injure your hands and fingers.

1 **Insert Mounting Collar ⑤ into the dashboard, and bend the mounting tabs out with a screwdriver.**

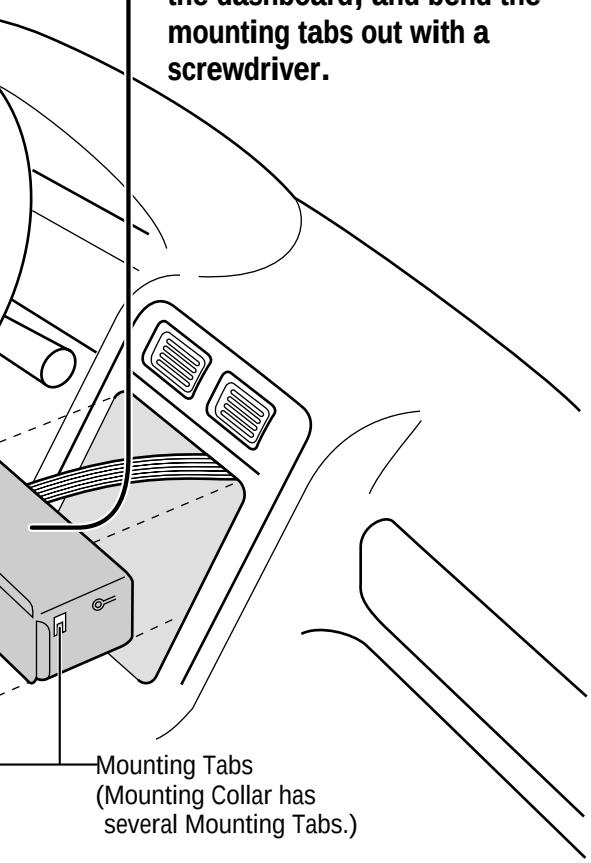

2 **Secure the rear of the unit.**
After fixing Mounting Bolt ⑨ and Power Connector ⑩, fix the rear of the unit to the car body by either method (a) or (b) shown at right.

3 **Insert Trim Plate ⑫.**

4 **After installation, reconnect the negative ⊖ battery terminal.**

Make sure that the lock lever (※) is flush with the mounting collar (not projecting outward).

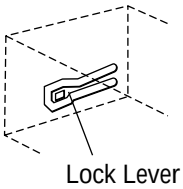

(a) Using the Rear Support Strap ⑦

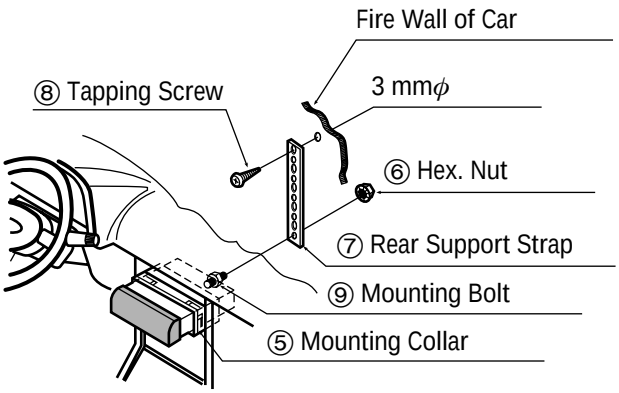

(b) Using the Rubber Cushion (Option)

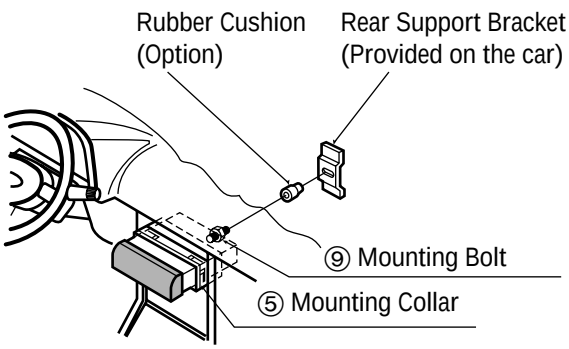

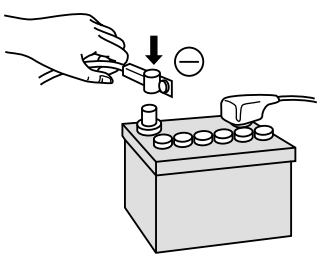

Anti-Theft System

This unit is equipped with a removable face plate. Removing this face plate makes the radio totally inoperable. The security indicator will blink.

Remove the removable face plate.

❶

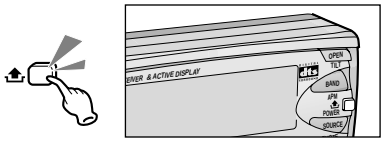

- When the removable face plate comes off, the center speaker opens. (The center speaker stays open.)

❷ Remove the removable face plate by pulling on the right side of the unit.

❸ Gently press the button of the case and open the cover. Place the face plate into the case and take it with you when you leave the car.

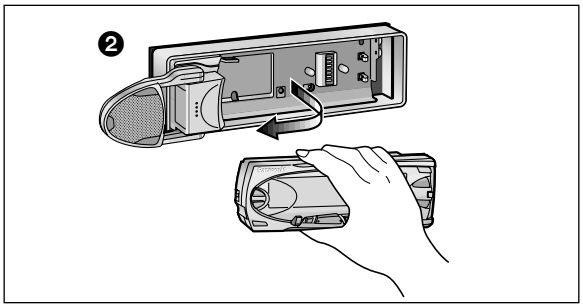

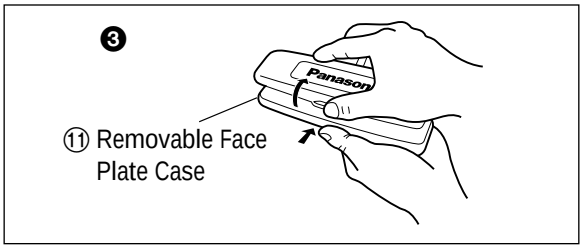

Cautions

- Do not touch the contacts on the face plate or on the main unit, since this may result in poor electrical contacts.
- If dirt or other foreign substances get on the contacts, wipe them off with a clean and dry cloth.
- Do not apply a strong downward force onto the face plate and do not put anything on it while it is open, or it might be damaged.
- This face plate is not water-proof. Do not expose it to water or excessive moisture.
- Do not remove the face plate while driving your car.
- Do not place the face plate on the dashboard or nearby areas where the temperature rises to high levels.

Install Removable Face Plate

❶ Slide the left side of the removable face plate in place.

❷ Press the right end of removable face plate until a “click” is heard.

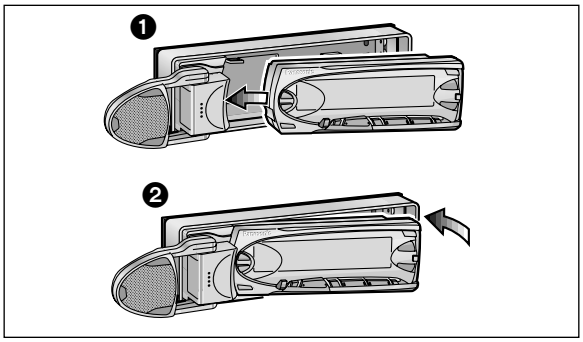

Security Indicator

The security indecator blinks when the removable face plate is removed from the unit. (➡ page 49)

❶ Press and hold **[SEL]** for more than 2 seconds to change to function control mode.

❷ Press **[SEL]** to select “S-LED SEL”.

❸ Press **[$] [%]** to turn the security indicator (S-LED) on.

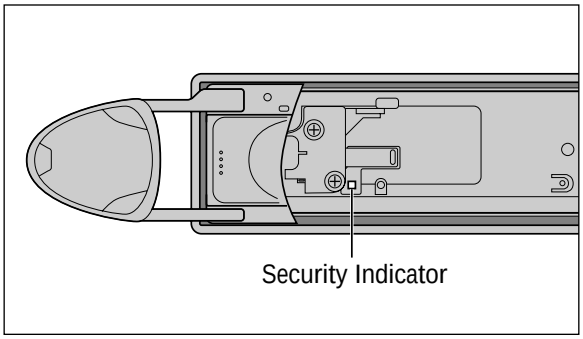

Wiring Connections

❒ Accessories used for wiring

No.	Item	Qty	No.	Item	Qty
②	Power Amplifier Unit	1	⑭	Battery Extension Lead	1
⑩	Power Connector	1	⑮	Speaker Extension Lead	1
⑬	Ground Extension Lead	1	⑯	Clamp Connector	1

❒ Basic Wiring

Example Combination
- Color LCD Monitor (CY-VM1500EX)
- External amplifier for subwoofer (CY-M7052)
- Subwoofer (CJ-HD30)

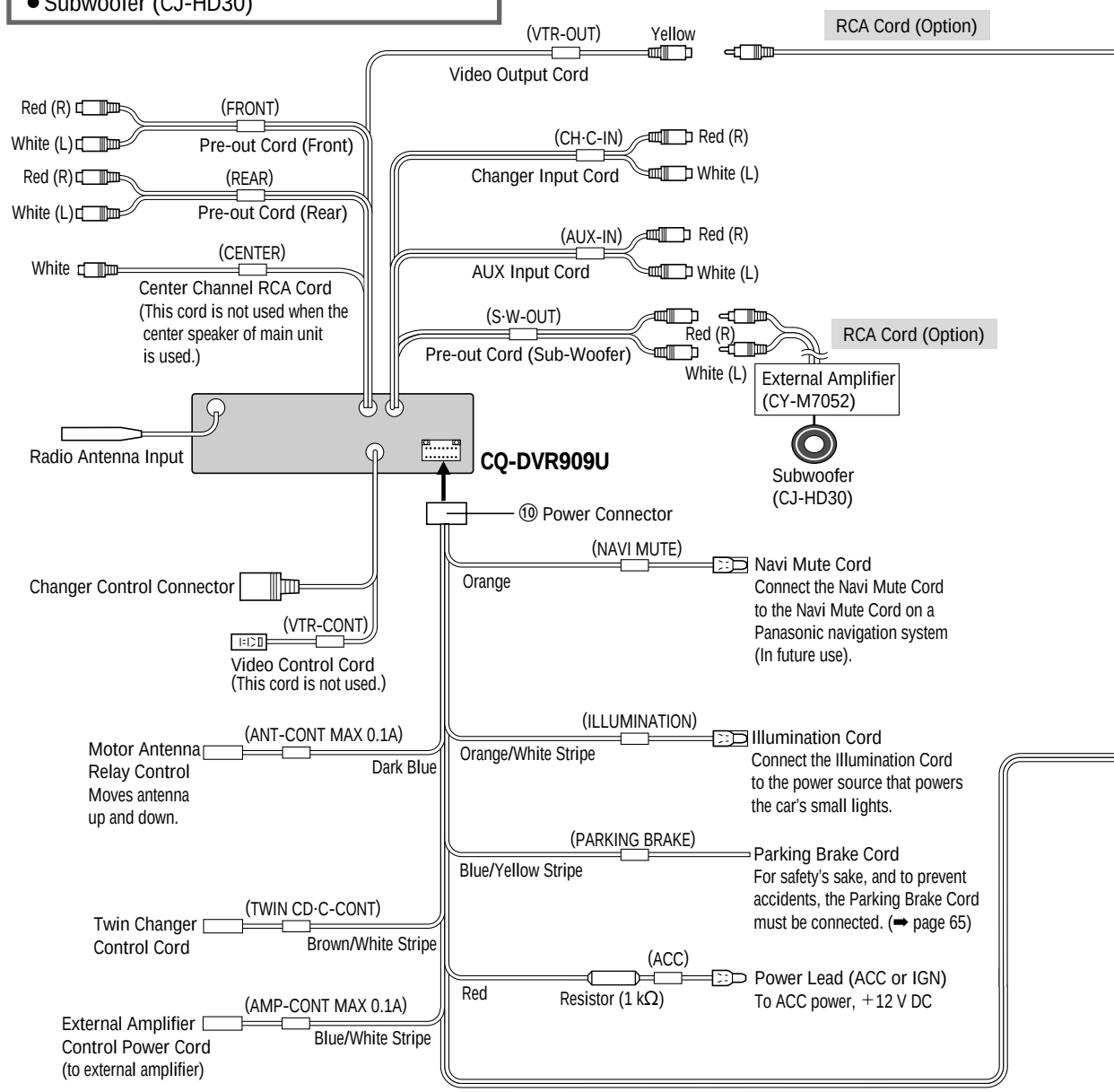

Wiring Connections (continued)

❒ Upgrading the System

Example Combination
- CD changer (CX-DP801U)
- CD changer (CX-DP88U)
- Stereo power amplifier
- Upgraded system speakers

- This unit can be connected to an optional CD changer (CX-DP801U/88U). For details consult your nearest Panasonic dealer.
- For connection to the CD changer, refer to the operating instructions of the CD changer (CX-DP801U/88U).

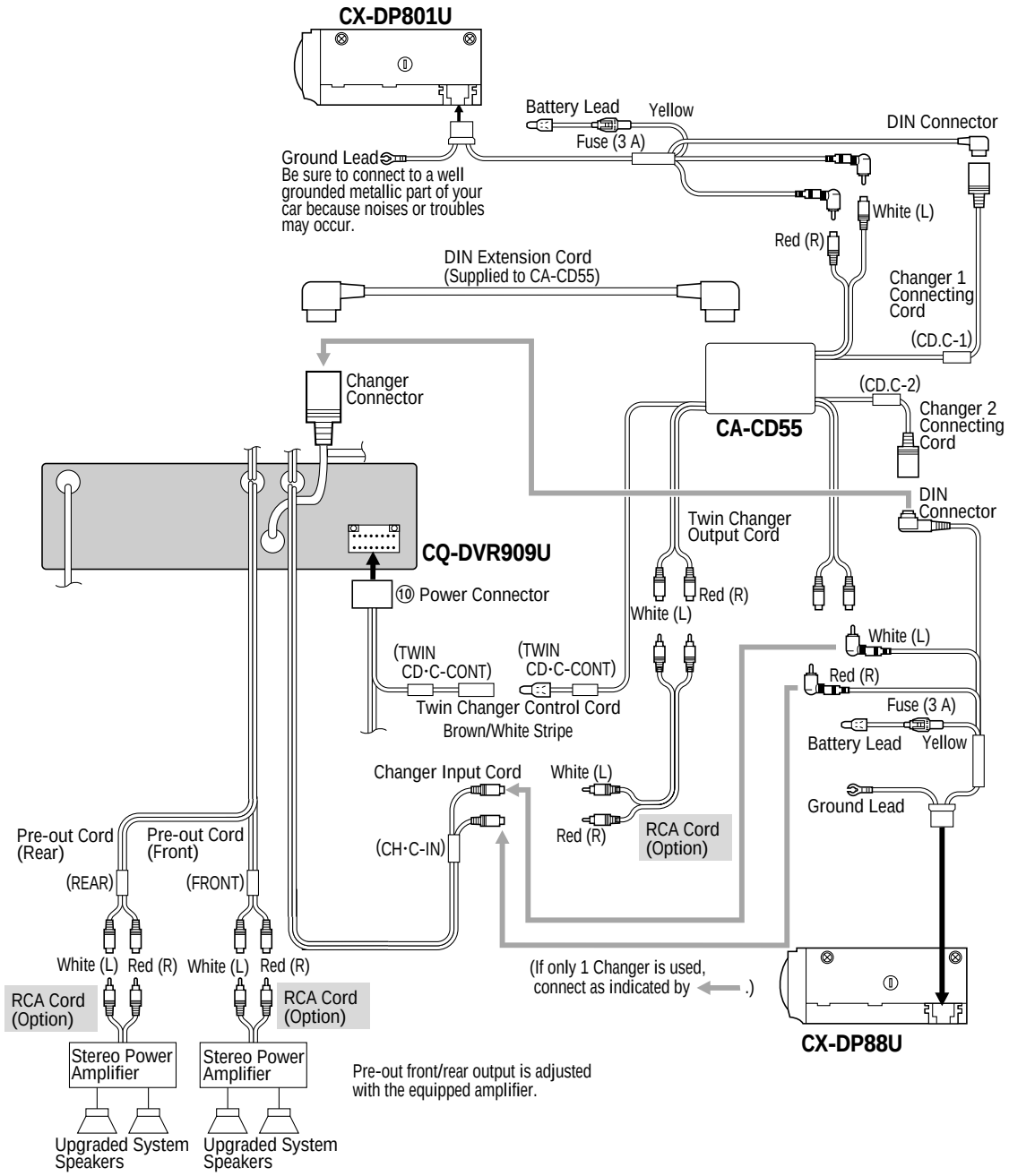

Cautions

- This product is designed to operate of a 12 volt, negative ground battery system.
- To prevent damage to the unit, be sure to follow the connection diagram below.
- Remove approx. 5 mm of protective covering from the ends of the leads before connecting.
- Do not insert the power connector into the unit until the wiring is completed.
- Be sure to insulate any exposed wires from a possible short-circuit from the car chassis. Bundle all cables and keep cable terminals free from touching any metal parts.
- Note that if your car has a driving computer or a navigation computer, disconnecting the battery cables may cause the contents of memory for these computers to be lost.

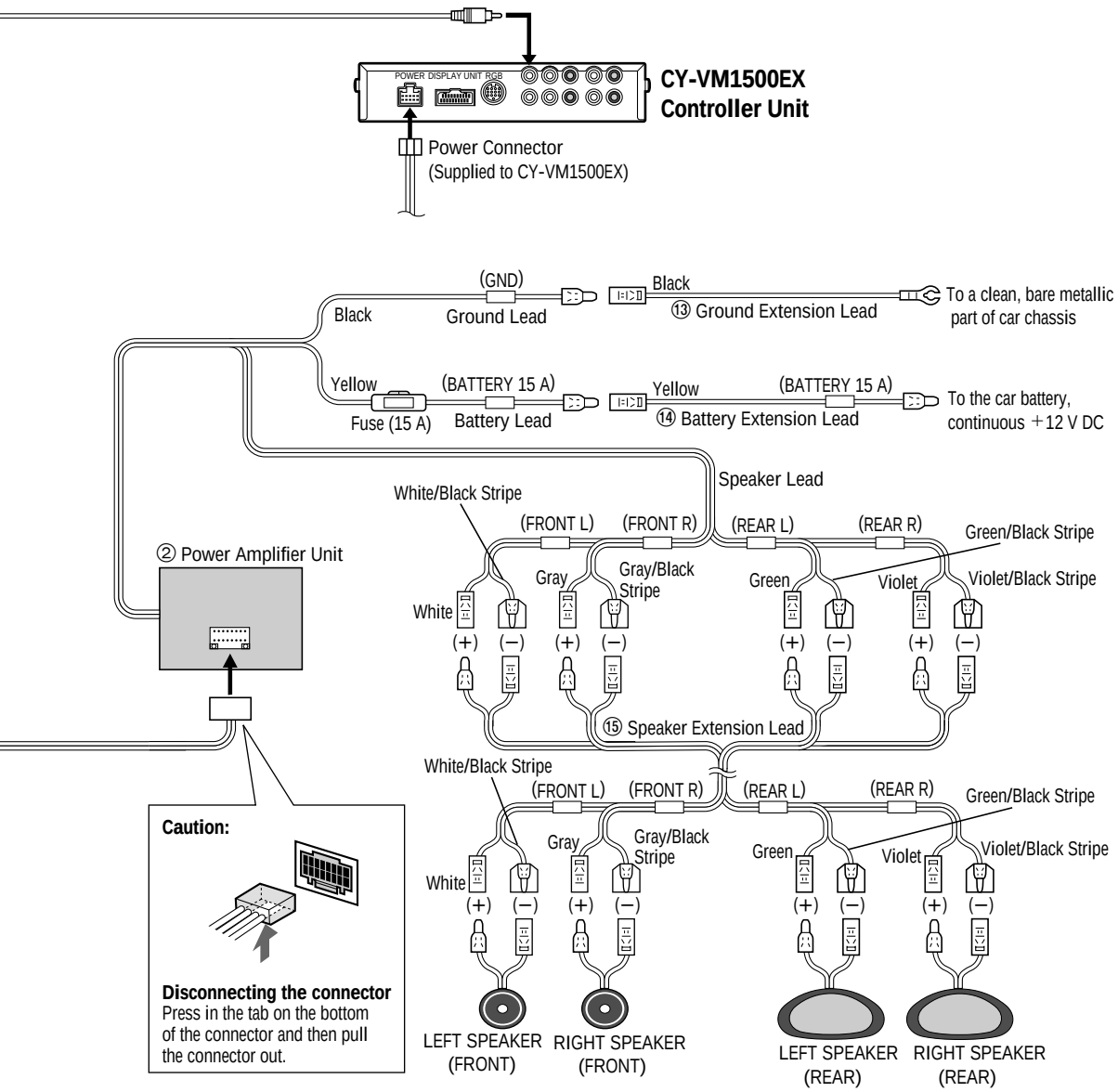

❒ Parking Brake Cord

Caution:

- **For safety's sake, and to prevent accidents, the parking brake cord must be connected.**

Note:

- The position of the parking brake switch depends on the car. (The figure shows examples of where the switch might be located.) For details on the exact location of the parking brake switch in your car, contact your dealer.

Hand-operated parking brake

Foot-operated parking brake

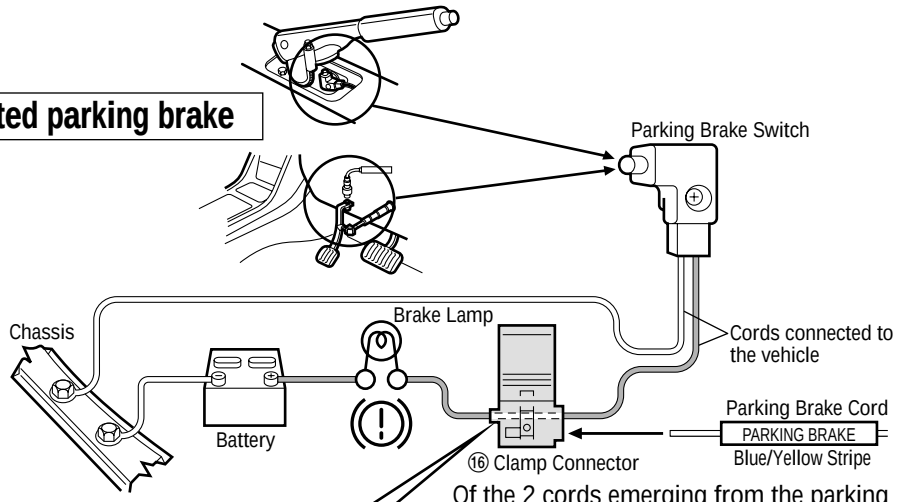

Of the 2 cords emerging from the parking brake switch, connect the player's parking brake cord to the one that is not connected to the vehicle's chassis while the brake is in the released state.

Connecting the clamp connector ⑯

- Attach the clamp connector to the vehicle cord at a suitable position.
- Note that if the cord being clamped onto is too thin (0.3 mm^2 or less), the connection may not be adequate.

❶ Push the end of the side brake cord into the hole on the clamp connector.
Place the vehicle cord into the groove in the clamp connector.

❷ While making sure that the cords do not slip out of the clamp connector, press the element down with a pair of pliers.

❸ Close the cover until it snaps shut.

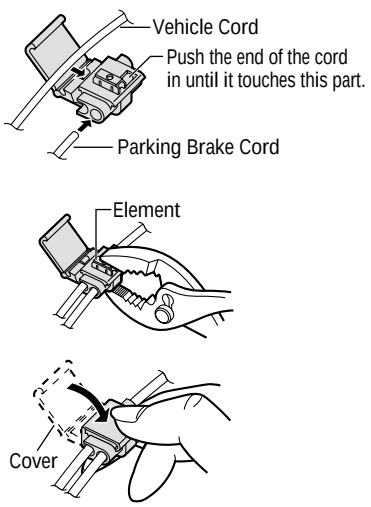

Troubleshooting

❒ Maintenance

Your product is designed and manufactured to ensure the minimum of maintenance. Use a soft cloth for routine exterior cleaning. Never use benzine, thinner or other solvents.

❒ When Something Doesn't Work

Check the chart for possible causes and solutions to the problem you might be experiencing. Some simple checks or minor adjustments may eliminate the problem.

❒ Product Servicing

If the suggestions in the charts don't solve the problem, we recommend that you take it to your nearest authorized Panasonic Servicenter. The unit should be serviced only by a qualified technician.

❒ Replacing the Fuse

Use fuses of the same specified rating (15 amps). Using different substitutes or fuses with higher ratings, or connecting the unit directly without a fuse, could cause fire or damage to the stereo unit.
If the replacement fuse fails, contact your nearest Panasonic Servicenter for service.

Error Display Messages

❒ DVD/Video CD/CD

Display	Cause	Check/Remedy
E1 PLS EJECT E2 PLS EJECT	● Either the disc is dirty, or upside down. ● Either the disc is scratched or has some other problems. The disc is not playable.	Press **[⏏]** and check the disc.
E3 PLS EJECT	The unit will not operate for some reason.	Eject the disc. If the disc does not eject when you press **[⏏]**, then simply press the reset switch.
PAL/NTSC ERR	An attempt was made to play a PAL disc.	Press **[⏏]** and check the disc.
REGION ERR	An attempt was made to play a disc with a region number that was not "1" or "ALL".	Press **[⏏]** and check the disc.
PLS VER UP	The unit will not operate for some reason.	Eject the disc. If the disc does not eject when you press **[⏏]**, then simply press the reset switch.If the unit still does not operate, contact your nearest Panasonic Servicenter for service.

Troubleshooting (continued)

❒ Panel

Symptom	Remedy	Page
Cannot adjust the tilt of the panel.	Change the tilt setting to “ON”.	27

❒ Radio

Symptom	Remedy	Page
There is a lot of noise in FM stereo and monaural broadcasts.	Select another station with a stronger signal.	28
Station presets were cancelled.	Connect the battery power cord to a terminal that is always supplied with power.	62

❒ DVD/Video CD/CD

Symptom	Remedy	Page
The sound skips. The sound quality is poor.	Refer to the section “Disc Notes” and clean the disc.	70
Vibrations cause skips.	● Install the unit at an angle less than 30 degrees. ● Refer to the section on installation and make sure that the unit is securely attached to the mounting bracket, etc.	58 58
The disc will not eject.	Open the panel and press **[⏏]**. If the disc still does not eject, press the reset switch.	30/ 69
The disc will not play, or else it stops very quickly.	● Condensation has formed in the unit. Wait 1 or 2 hours for the unit to dry, and then try again. ● The unit can only play the following types of discs: DVD video, DVD audio, video CD, and music CD. ● Refer to the section “Disc Notes” and clean the disc. ● Insert the disc with the label facing up.	= 22 70 30
The picture does not appear on the TV.	● Check the connections. ● Check the settings for the TV itself. ● Set the initial setting “TV SELECT” to “YES”. ● Stop the car and apply the parking brake.	62 = 38 31
The buttons do not work.	Some operations are not permitted with certain discs.	=
Video CD menu playback does not work.	Menu playback is only possible when playing a video CD that has the playback control feature.	=
The picture becomes distorted while fast forwarding or reversing.	A certain amount of distortion is normal.	=
No subtitles appear.	Subtitles must be recorded on the disc, or they will not appear. (Refer to the guide provided with your disc.)	=
The size on the connected TV is not 4:3 (16:9).	Set “TV ASPECT” correctly in accordance with the TV that you are using.	38

❒ Changer

Display	Cause	Check/Remedy
CD • CH—E1— CD • CH—E2—	● Either the disc is dirty, or upside down. ● There is a scratch on the disc.	Check the disc. (The changer automatically switches to the next disc.)
CD • CH—E3—	The changer will not operate for some reason.	Press **[⏏]** on the changer. If the changer does not respond, press the changer's reset switch.
NO DISC	There are no discs in the changer or magazine.	Load discs in the changer or magazine.

Notes

- The number of the disc that is the cause of the error is sometimes displayed before "E1" or "E2".
- Depending on the changer, the information that is displayed and the remedy may sometimes differ in part. For details, refer to the User's Manual provided with your changer.

Troubleshooting Tips

❒ Common

Symptom	Remedy	Page
The power does not come on.	● Turn the ignition switch to "ON" or "ACC". ● Connect the cords correctly. ● Replace the fuse.	= 62–65 66
The unit produces no sound.	● Turn muting off. ● Connect the cords correctly. ● Wait until the condensation clears.	53 62–65 =
The buttons do not work.	● Change the display to something other than demo mode and then try again. ● Set the MUTE/ATT to "OFF".	26 53
Cannot set the clock.	Press **[POWER]** and turn the power on before attempting to set the clock.	26

❒ Remote Control

Symptom	Remedy	Page
Pressing the buttons has no effect.	● Insert the batteries correctly. ● Make sure that the batteries are of the correct type. ● Replace the batteries. ● Point the remote control at the remote control sensor labeled "REMOTE".	22 22 22 =

❒ DVD/Video CD/CD (Continued)

Symptom	Remedy	Page
It is difficult to hear quiet sounds.	Set the DR COMP setting to “DR COMP ON”.	50
Cannot switch the audio language/subtitle language/angle.	● It is not possible to switch if the disc does not have multiple audio languages/subtitle languages/angles recorded on it. (Refer to the guide provided with your disc.) ● Some discs permit switching through a menu screen. ● Sometimes, switching angles is possible only with certain scenes.	= 35 =
The audio/subtitle language selected in the initial settings is not used.	If audio or subtitles in that language are not recorded on the disc, the audio or subtitles do not switch to that language. (Some discs permit switching through a menu screen. Refer to the guide provided with your disc.)	35
Messages in the menu screen are not in the desired language.	Check the setting for “MENU LAN” in the initial settings.	38

❒ Sound Settings

Symptom	Remedy	Page
No sound is output from a speaker.	● Adjust “BAL//FAD” to a suitable position. ● Connect the cords correctly. ● Correct the speaker settings.	45 62 25
No sound is output from the center speaker.	● Open the center speaker. ● Raise the output level/volume. ● Change the separately purchased speaker setting to “NONE”. ● Set the surround setting to “PROLOGIC ON”. ● Set the speaker output setting to “DOWN MIX OFF”. ● Cancel the separate front/rear settings.	26 25/45 25 43 43 53
When playing in stereo, left and right channels are reversed.	Connect the speaker cords correctly.	62–64
DR COMP does not work. (“DR COMP” does not light .)	This function only works with Dolby Digital encoded material.	51

If the Unit does not Operate Properly

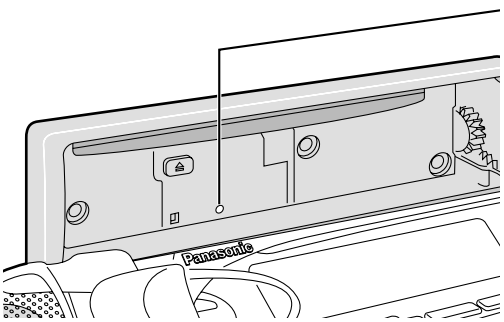

Reset Switch

Push a thin, unbreakable object into this hole to press the reset switch.

- After a reset, the unit reverts to its initial state. Note that any information or settings stored in the unit’s memory will be lost.

Caution

- Press the reset switch if pressing any of the other buttons has no effect.

Disc Notes

❒ Handling and Cleaning

- Dirt, dust, scratches and warping discs will cause misoperation.
- Do not place stickers or make scratches on discs.
- Do not warp discs.
- A disc should always be kept in its case when not in use to prevent it from becoming damaged.
- Do not place discs in the following places:
  1. Direct sunlight
  2. Dirty, dusty and damp areas
  3. Near car heaters
  4. On the seats or dashboard

Disc Cleaning

Use a dry soft cloth to wipe the surface. If the disc is quite dirty, use a soft cloth slightly moistured with isopropyl (rubbing) alcohol. Never use solvents such as benzine, thinner or conventional record cleaners as they may mar the surface of the disc.

Note:

- A disc may become somewhat scratched (although not enough to make it unusable) depending on how you handle it and conditions in the usage environment. Note that these scratches are not an indication of any problem with the player.

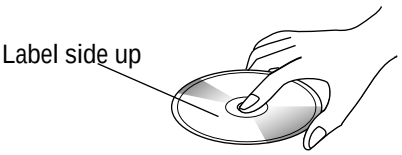

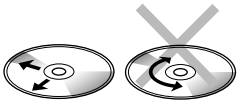

Wipe the disc from the center toward the outside edge.

❒ Preparing New Discs with Rough Spots

A new disc may have rough spots on its inside and outside edges. If a disc with rough spots is used, the proper setting will not be performed and the player will not play the disc. Therefore, remove the rough spots in advance by using a ball-point pen or pencil as shown on the right. To remove the rough spots, press the side of the pen or pencil against the inside and outside edges of the disc.

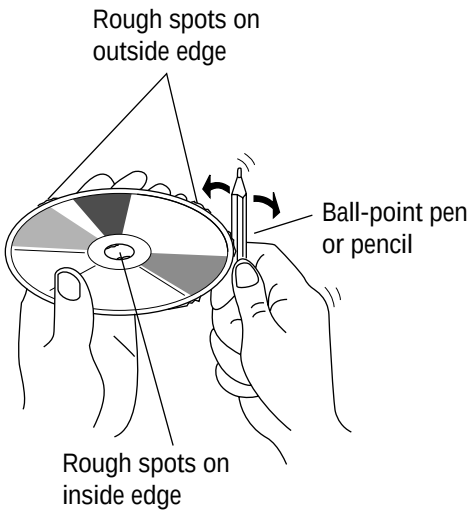

Language Code List

How to input the language code, refer to page 38.

Code	Language Name
6565	Afar
6566	Abkhazian
6570	Afrikaans
6577	Ameharic
6582	Arabic
6583	Assamese
6588	Aymara
6590	Azerbaijani
6665	Bashkir
6669	Byelorussian
6671	Bulgarian
6672	Bihari
6678	Bengali; Bangla
6679	Tibetan
6682	Breton
6765	Catalan
6779	Corsican
6783	Czech
6789	Welsh
6865	Danish
6869	German
6890	Bhutani
6976	Greek
6978	English
6979	Esperanto
6983	Spanish
6984	Estonian
6985	Basque
7065	Persian
7073	Finnish
7074	Fiji
7079	Faroese
7082	French
7089	Frisian
7165	Irish
7168	Scots Gaelic
7176	Galician
7178	Guarani
7185	Gujarati
7265	Hausa
7273	Hindi
7282	Croatian
7285	Hungarian

Code	Language Name
7289	Armenian
7365	Interlingua
7378	Indonesian
7383	Icelandic
7384	Italian
7387	Hebrew
7465	Japanese
7473	Yiddish
7487	Javanese
7565	Georgian
7575	Kazakh
7576	Greenlandic
7577	Cambodian
7578	Kannada
7579	Korean
7583	Kashmiri
7585	Kurdish
7589	Kirghiz
7665	Latin
7678	Lingala
7679	Laothian
7684	Lithuanian
7686	Latvian, Lettish
7771	Malagasy
7773	Maori
7775	Macedonian
7776	Malayalam
7778	Mongolian
7779	Moldavian
7782	Marathi
7783	Malay
7784	Maltese
7789	Burmese
7865	Nauru
7869	Nepali
7876	Dutch
7879	Norwegian
7982	Oriya
8065	Panjabi
8076	Polish
8083	Pashto, Pushto
8084	Portuguese
8185	Quechua

Code	Language Name
8277	Rhaeto-Romance
8279	Romanian
8285	Russian
8365	Sanskrit
8368	Sindhi
8372	Serbo-Croatian
8373	Singhalese
8375	Slovak
8376	Slovenian
8377	Samoan
8378	Shona
8379	Somali
8381	Albanian
8382	Serbian
8385	Sundanese
8386	Swedish
8387	Swahili
8465	Tamil
8469	Telugu
8471	Tajik
8472	Thai
8473	Tigrinya
8475	Turkmen
8476	Tagalog
8479	Tonga
8482	Turkish
8484	Tatar
8487	Twi
8575	Ukrainian
8582	Urdu
8590	Uzbek
8673	Vietnamese
8679	Volapük
8779	Wolof
8872	Xhosa
8979	Yoruba
9072	Chinese
9085	Zulu

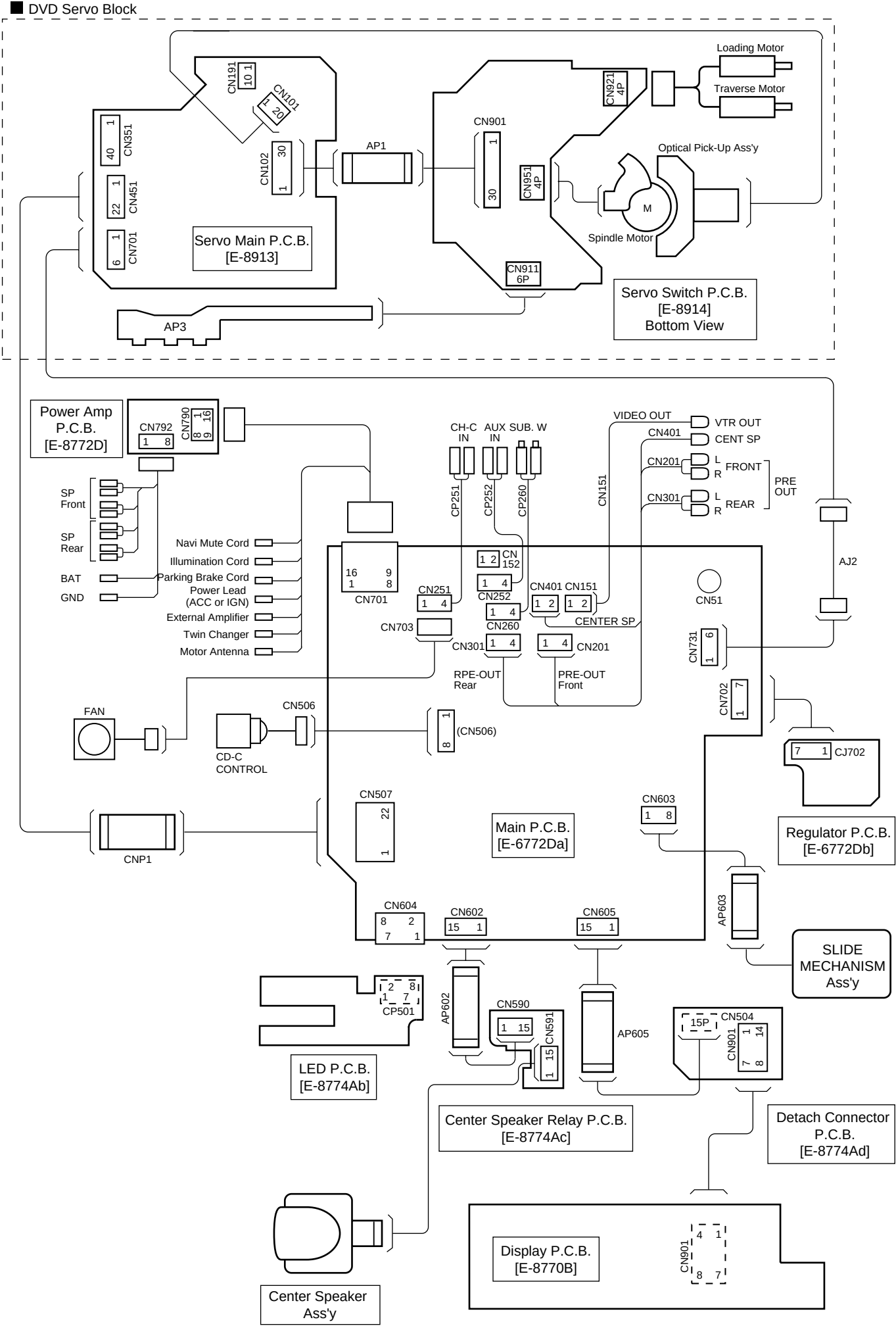
DVD Servo Block
Loading Motor
Traverse Motor
Optical Pick-Up Ass'y
Spindle Motor
CN191
CN101
CN351
CN102
AP1
CN901
CN921 4P
CN951 4P
CN451
CN701
Servo Main P.C.B. [E-8913]
CN911 6P
Servo Switch P.C.B. [E-8914] Bottom View
AP3
Power Amp P.C.B. [E-8772D]
CN792
CN790
SP Front
SP Rear
BAT
GND
Navi Mute Cord
Illumination Cord
Parking Brake Cord
Power Lead (ACC or IGN)
External Amplifier
Twin Changer
Motor Antenna
CH-C IN
AUX IN
SUB. W
CP251
CP252
CP260
VIDEO OUT
VTR OUT
CN401
CENT SP
CN201
FRONT
CN301
REAR
PRE OUT
CN151
AJ2
CN701
CN152
CN251
CN252
CN401 CN151
CN51
CN703
CN260
CN301
CN201
CENTER SP
RPE-OUT Rear
PRE-OUT Front
CN731
CN702
FAN
CN506
(CN506)
CD-C CONTROL
CJ702
CN507
CN603
Main P.C.B. [E-6772Da]
Regulator P.C.B. [E-6772Db]
CNP1
CN604
CN602
CN605
AP603
SLIDE MECHANISM Ass'y
CP501
AP602
CN590
CN591
AP605
CN504
15P
CN901
LED P.C.B. [E-8774Ab]
Center Speaker Relay P.C.B. [E-8774Ac]
Detach Connector P.C.B. [E-8774Ad]
Display P.C.B. [E-8770B]
CN901
Center Speaker Ass'y

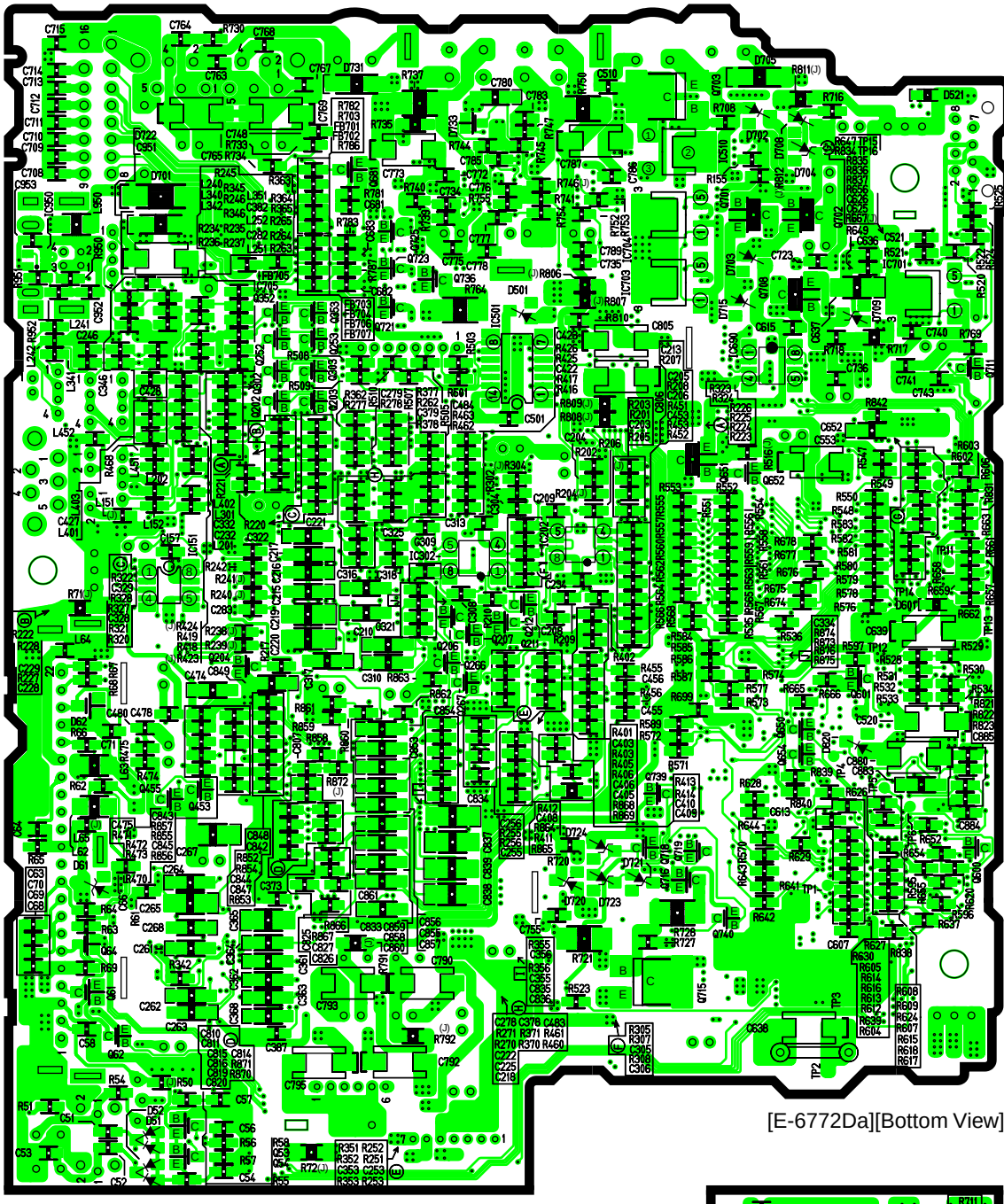

[E-6772Da][Bottom View]

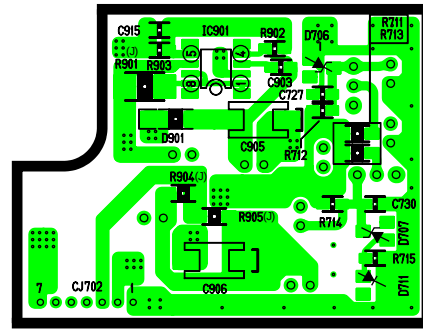

[E-6772Dd][Bottom View]

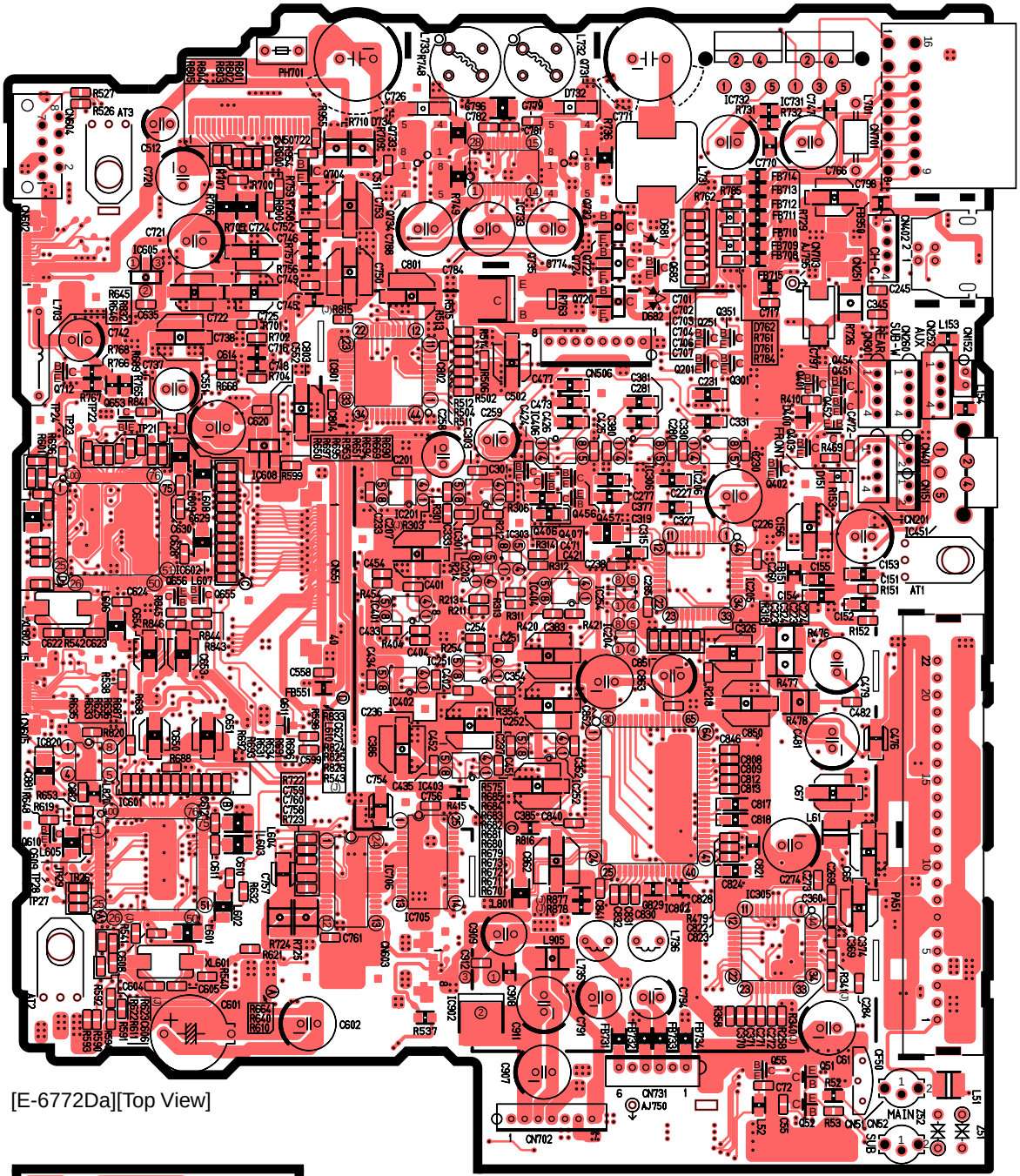

[E-6772Da][Top View]

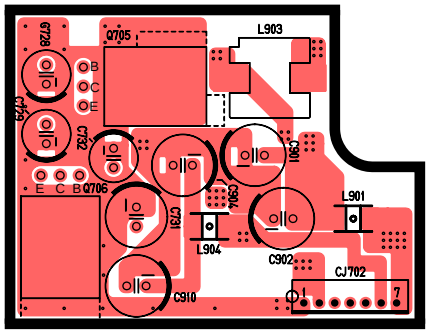

[E-6772Db][Top View]

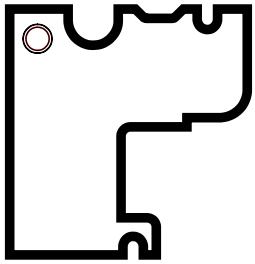

[E-8774Ac]
[Top View]

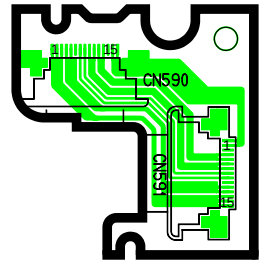

[E-8774Ac]
[Bottom View]

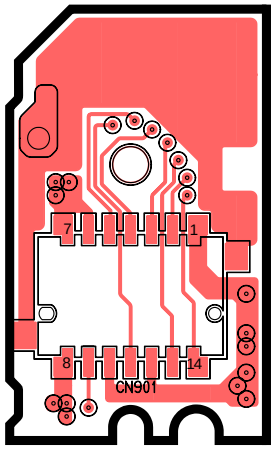

[E-8774Ad]
[Top View]

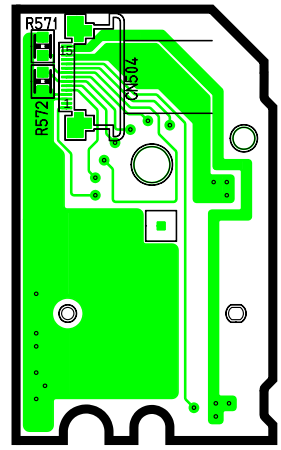

[E-8774Ad]
[Bottom View]

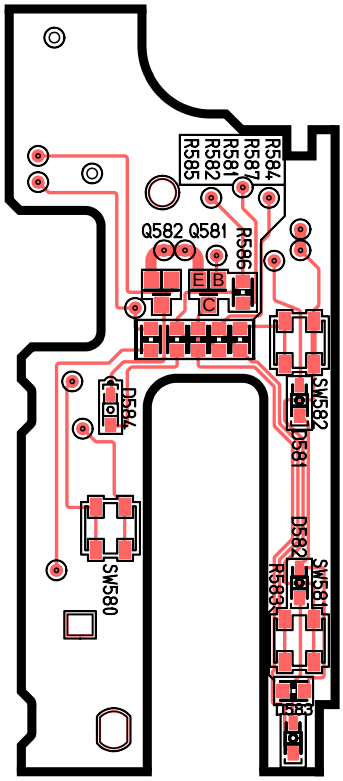

[E-8774Ab]
[Top View]

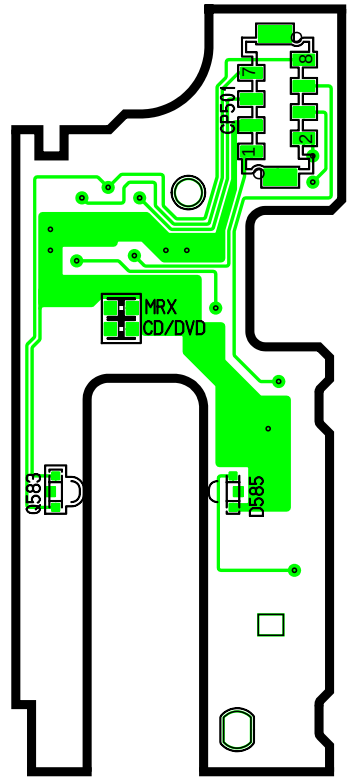

[E-8774Ab]
[Bottom View]

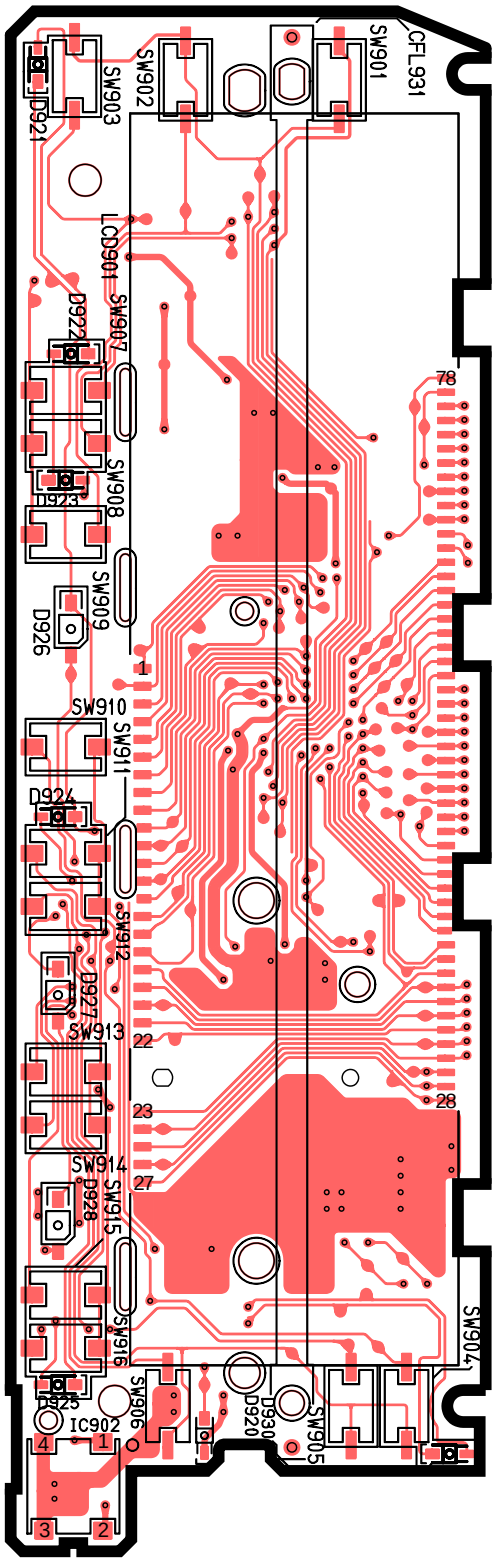

[E-8770B]
[Top View]

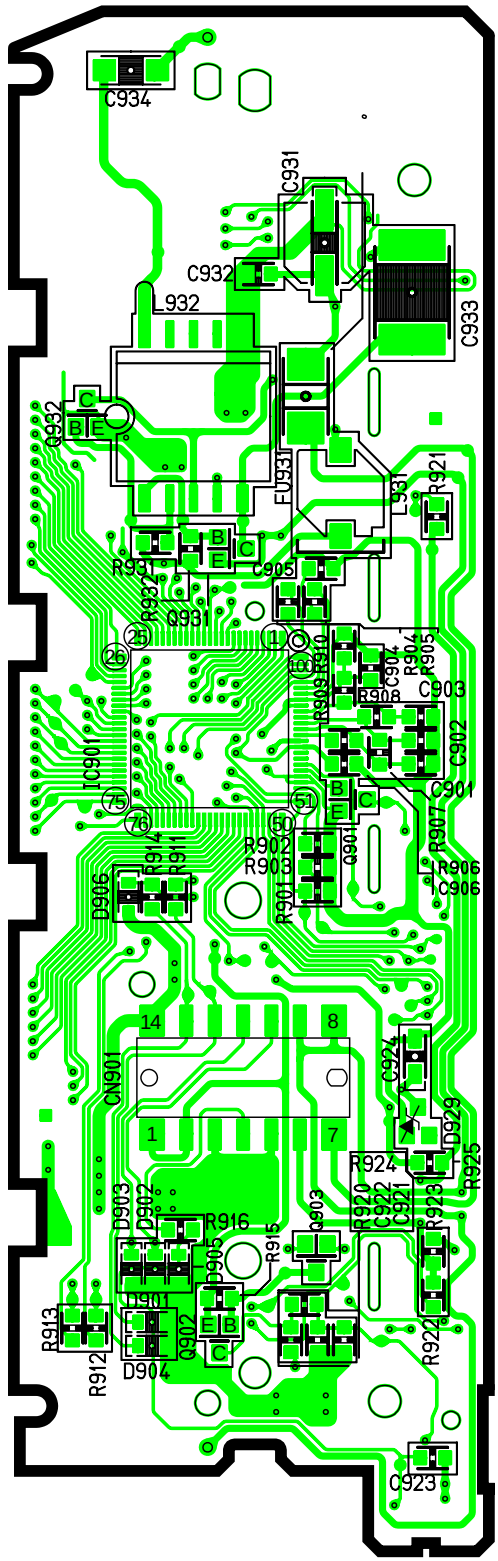

[E-8770B]
[Bottom View]

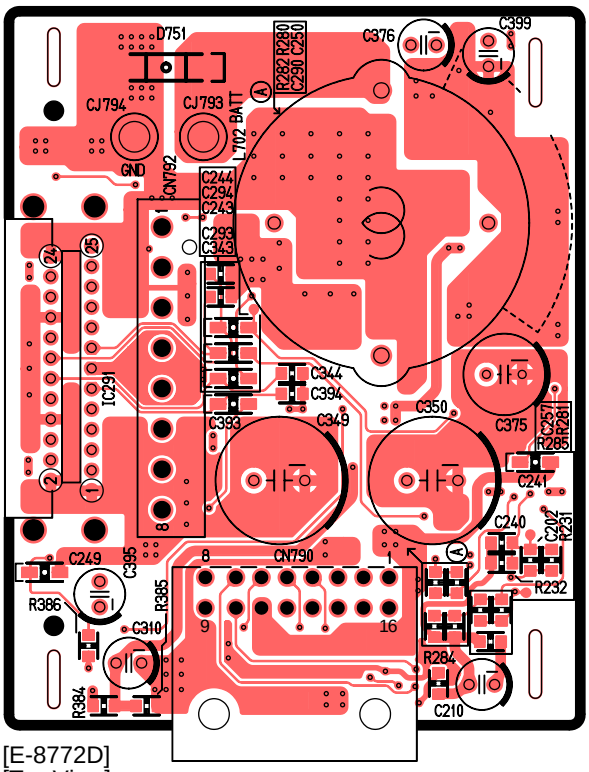

[E-8772D]
[Top View]

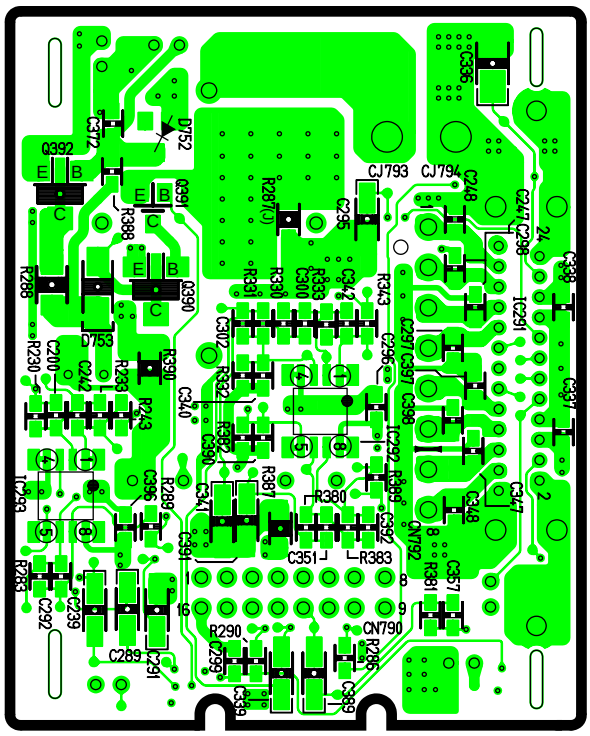

[E-8772D]
[Bottom View]

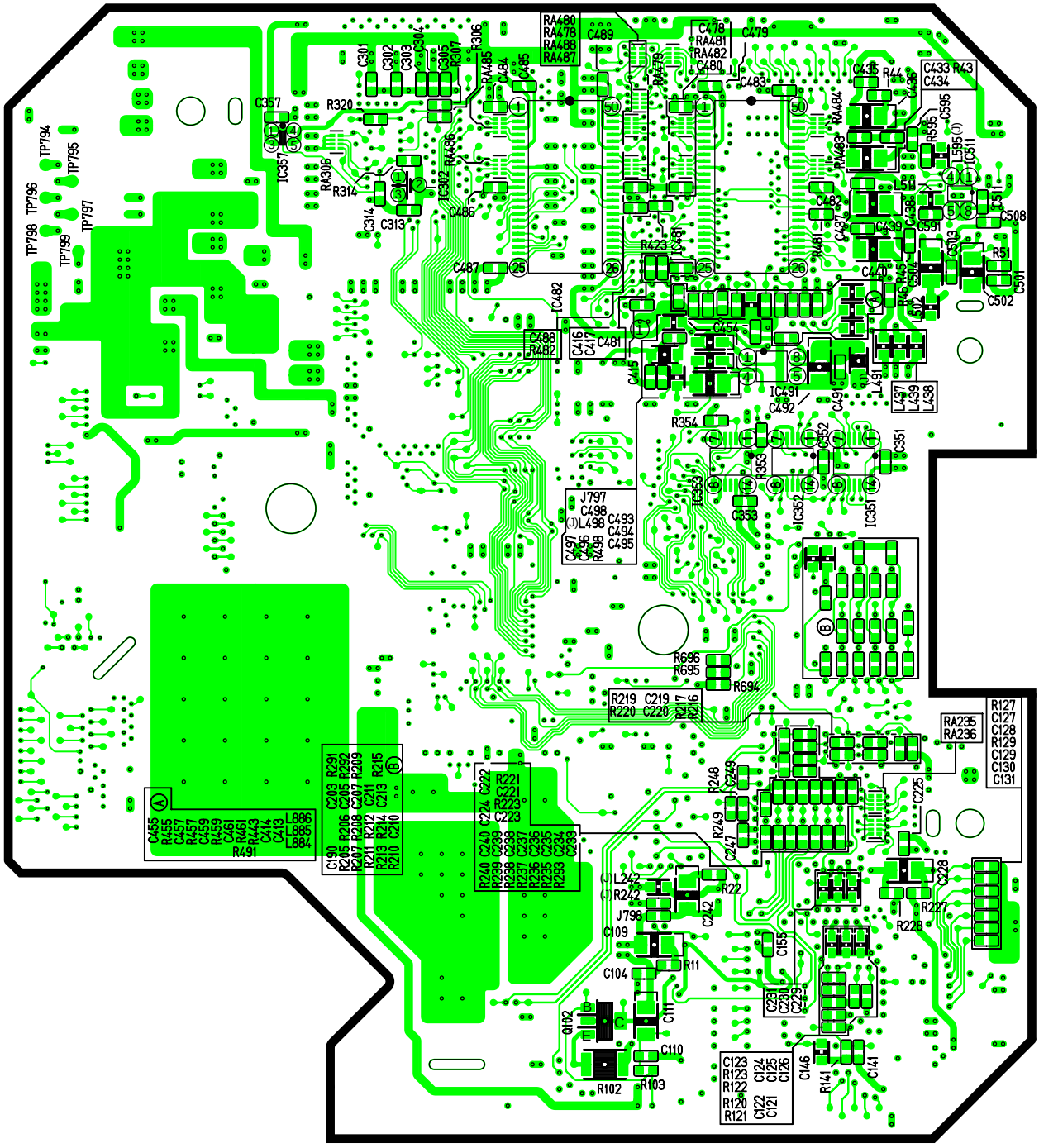

[E-8913][Bottom View]

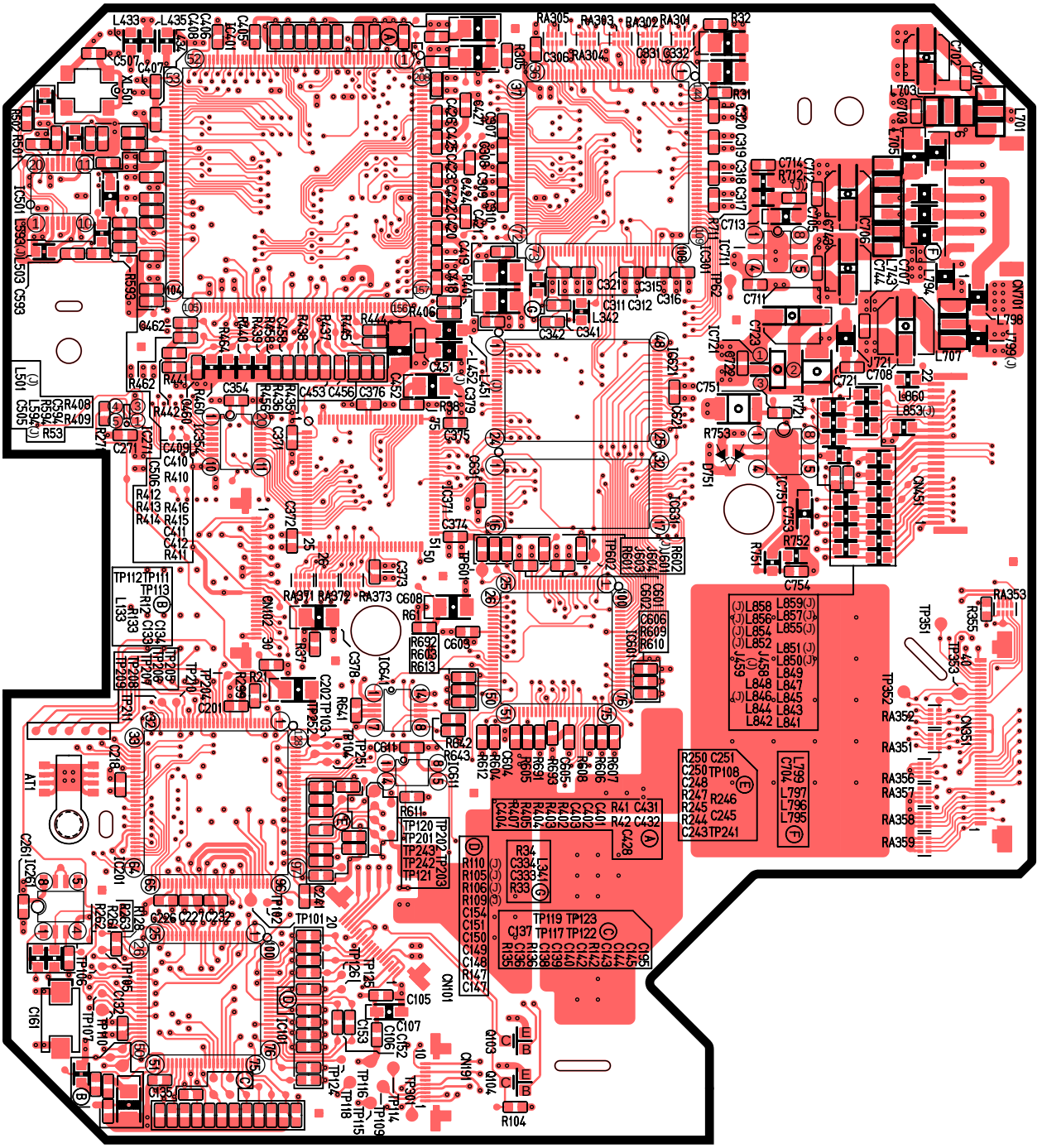

[E-8913][Top View]

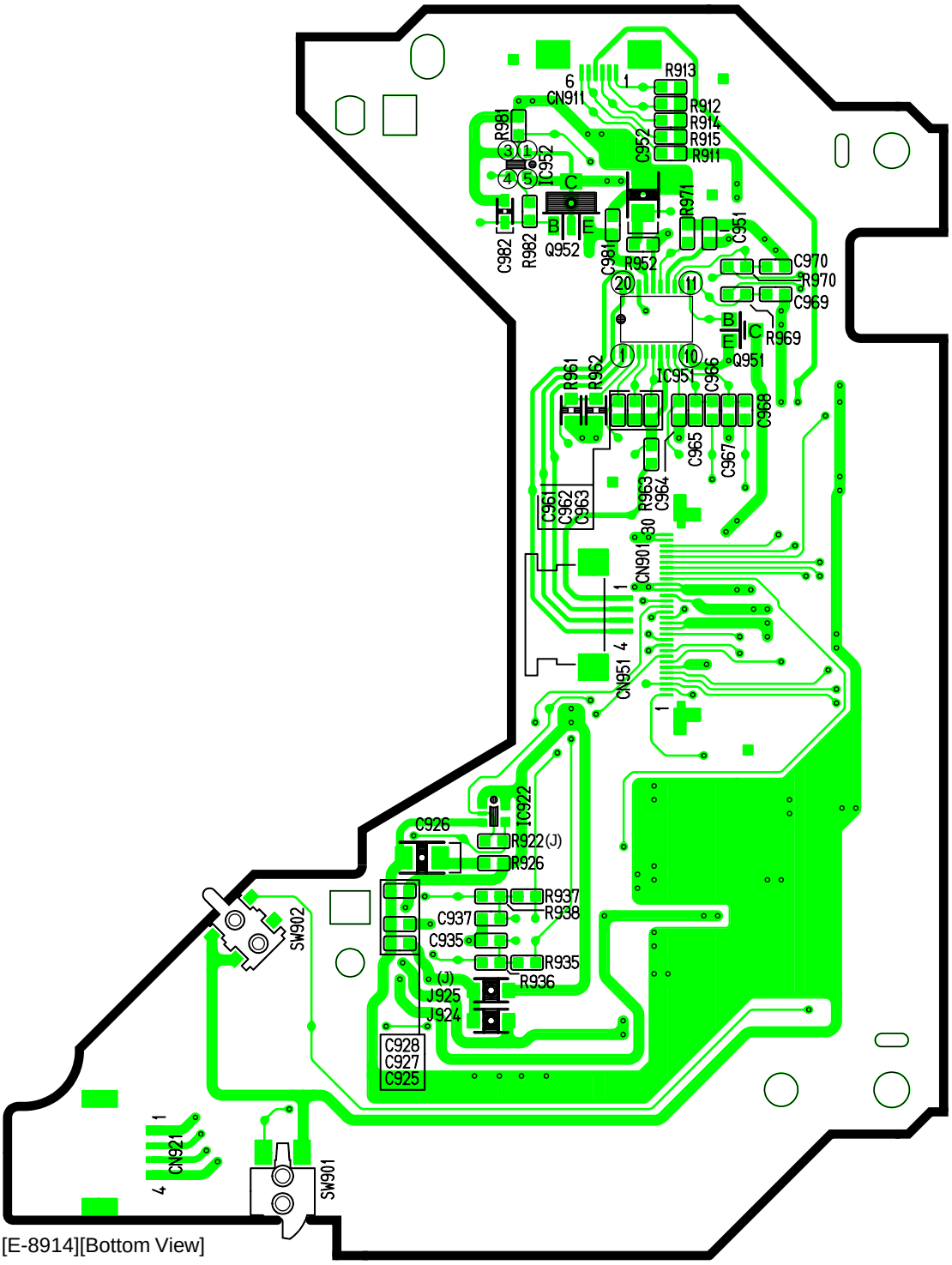

[E-8914][Bottom View]

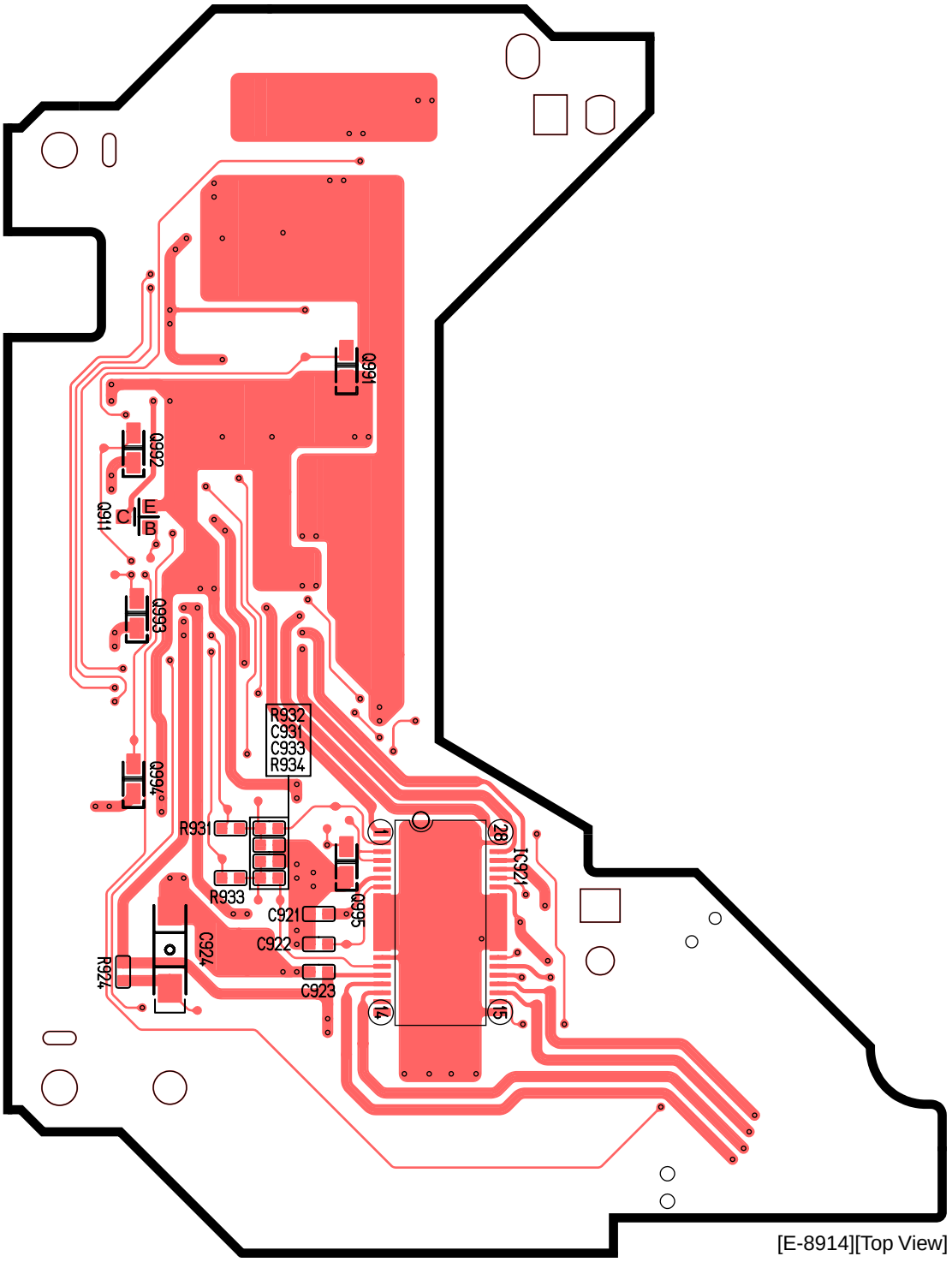

[E-8914][Top View]