"HIS MASTER'S VOICE"

"HIS MASTER'S VOICE" SERVICE MANUAL

for

12 VOLT CAR RADIOS

Models Q1, Q4, Q5, Q6, Q7

and

6 VOLT CAR RADIOS

Models R1, R4, R6

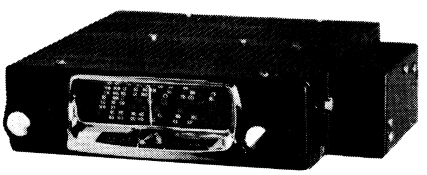

R1

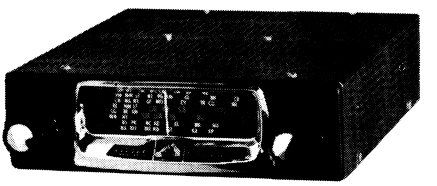

Q1

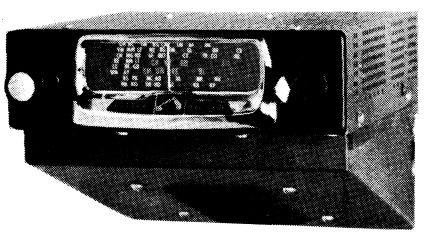

R4 — Q4

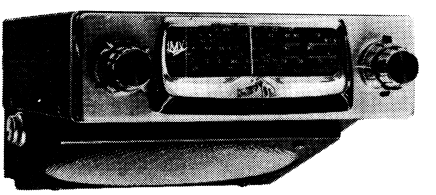

Q5

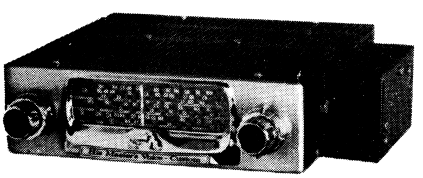

R6

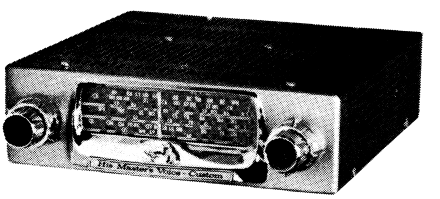

Q6 — Q7

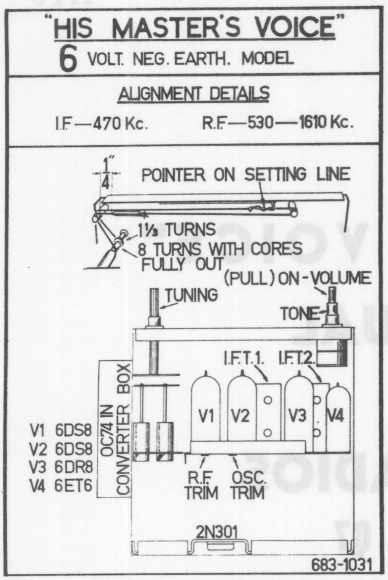

R1 — R4 ENGLISH TUNING UNIT

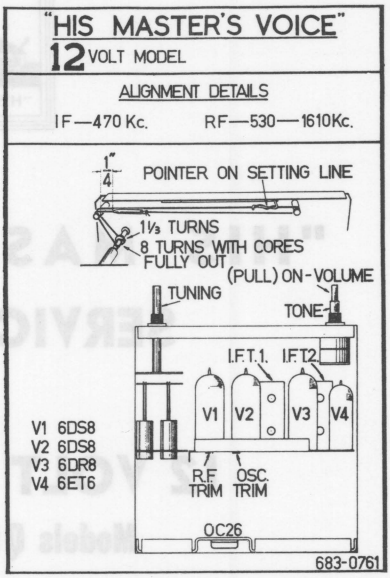

Q1 — Q4 — Q5 ENGLISH TUNING UNIT

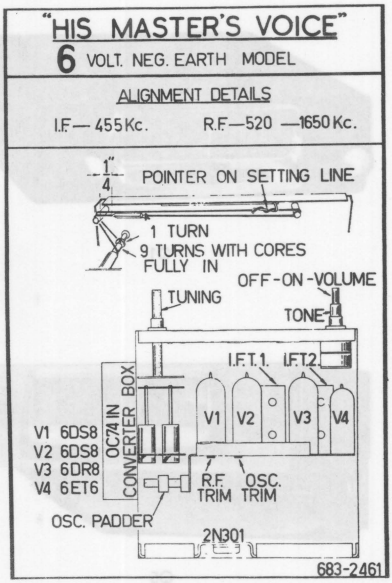

R6 AUSTRALIAN TUNING UNIT

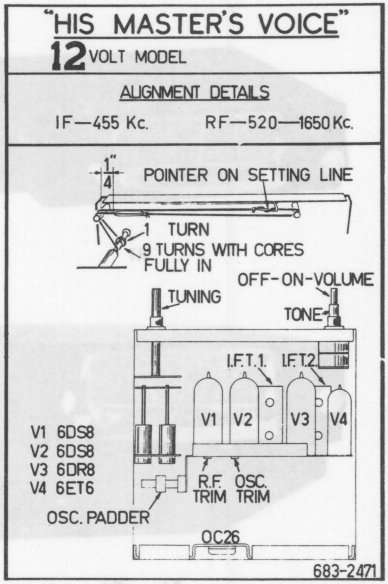

Q5 — Q6 — Q7 AUSTRALIAN TUNING UNIT

"HIS MASTER'S VOICE"

"HIS MASTER'S VOICE" SERVICE MANUAL

for

12 VOLT CAR RADIOS

Models Q1, Q4, Q5, Q6, Q7

and

6 VOLT CAR RADIOS

Models R1, R4, R6

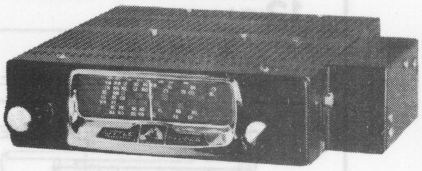

R1

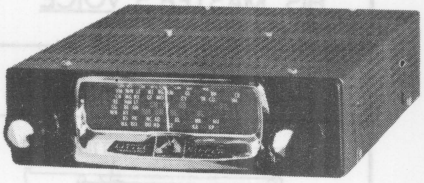

Q1

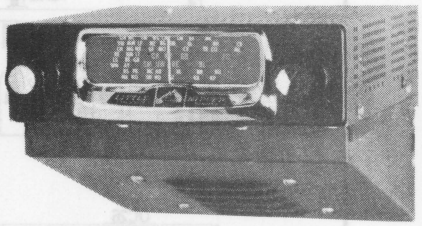

R4 — Q4

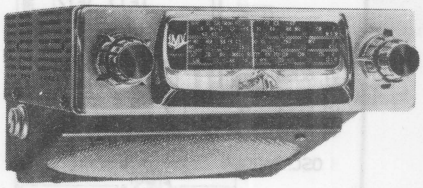

Q5

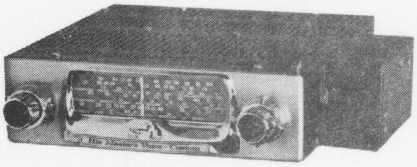

R6

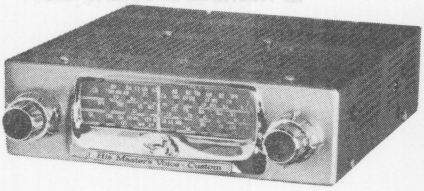

Q6 — Q7

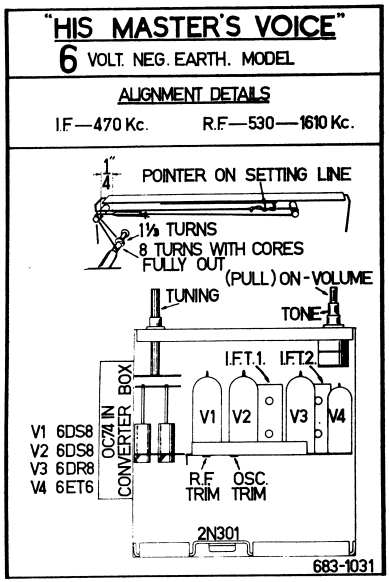

R1 — R4 ENGLISH TUNING UNIT

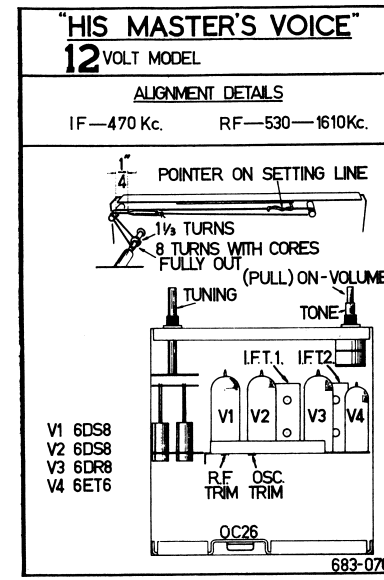

Q1 — Q4 — Q5 ENGLISH TUNING UNIT

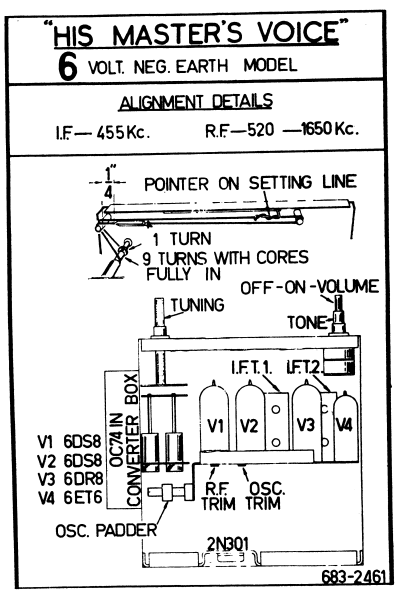

R6 AUSTRALIAN TUNING UNIT

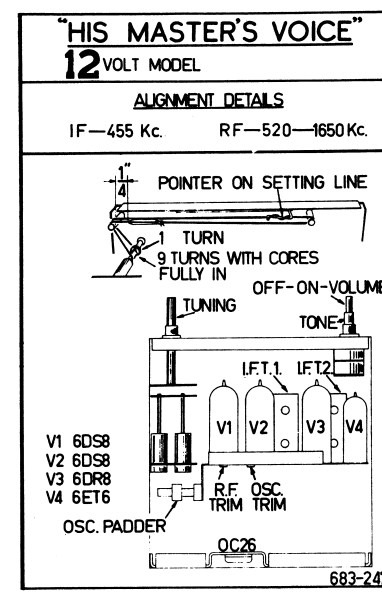

Q5 — Q6 — Q7 AUSTRALIAN TUNING UNIT

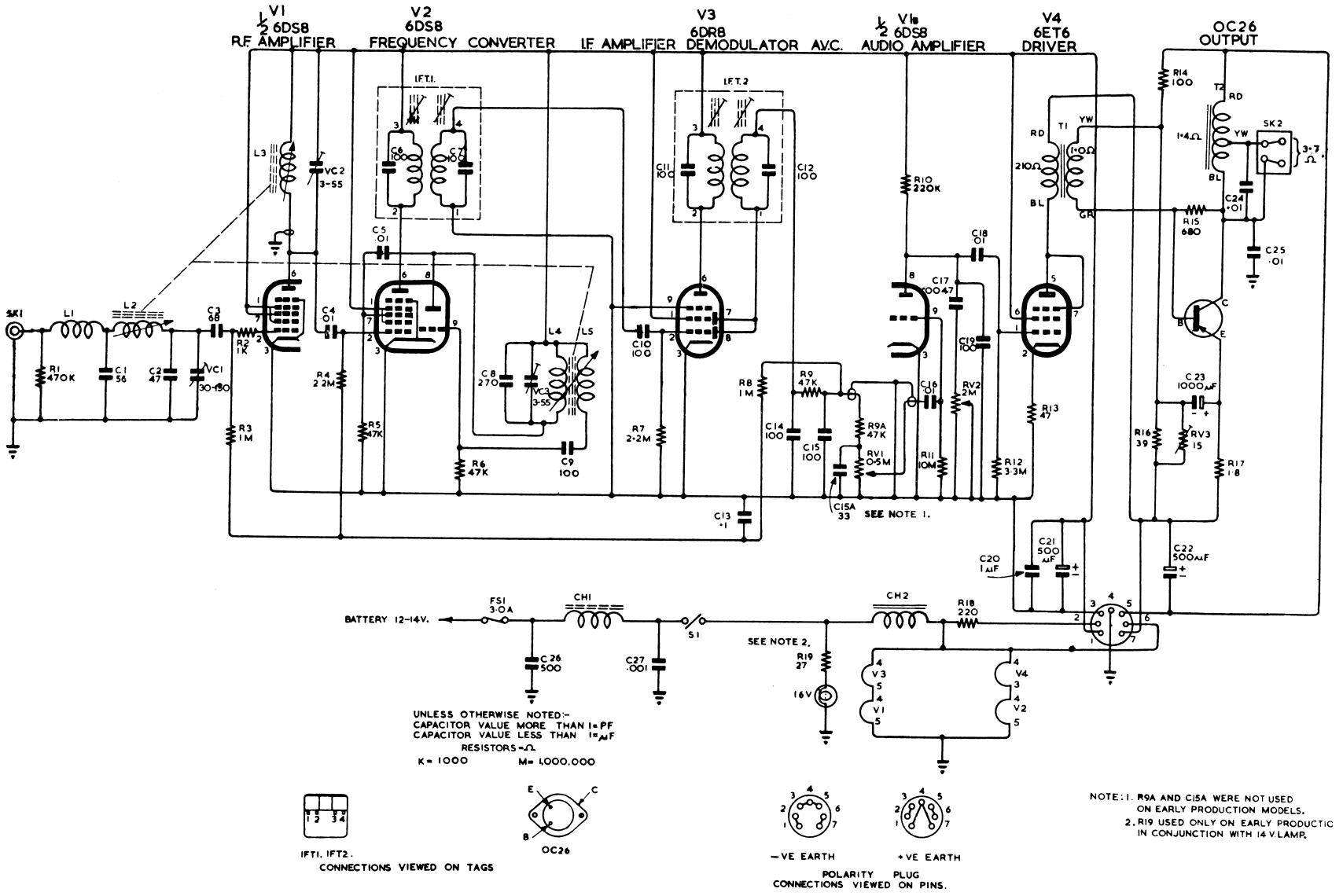

HMV CAR RADIO MODEL Q1, Q4

H10

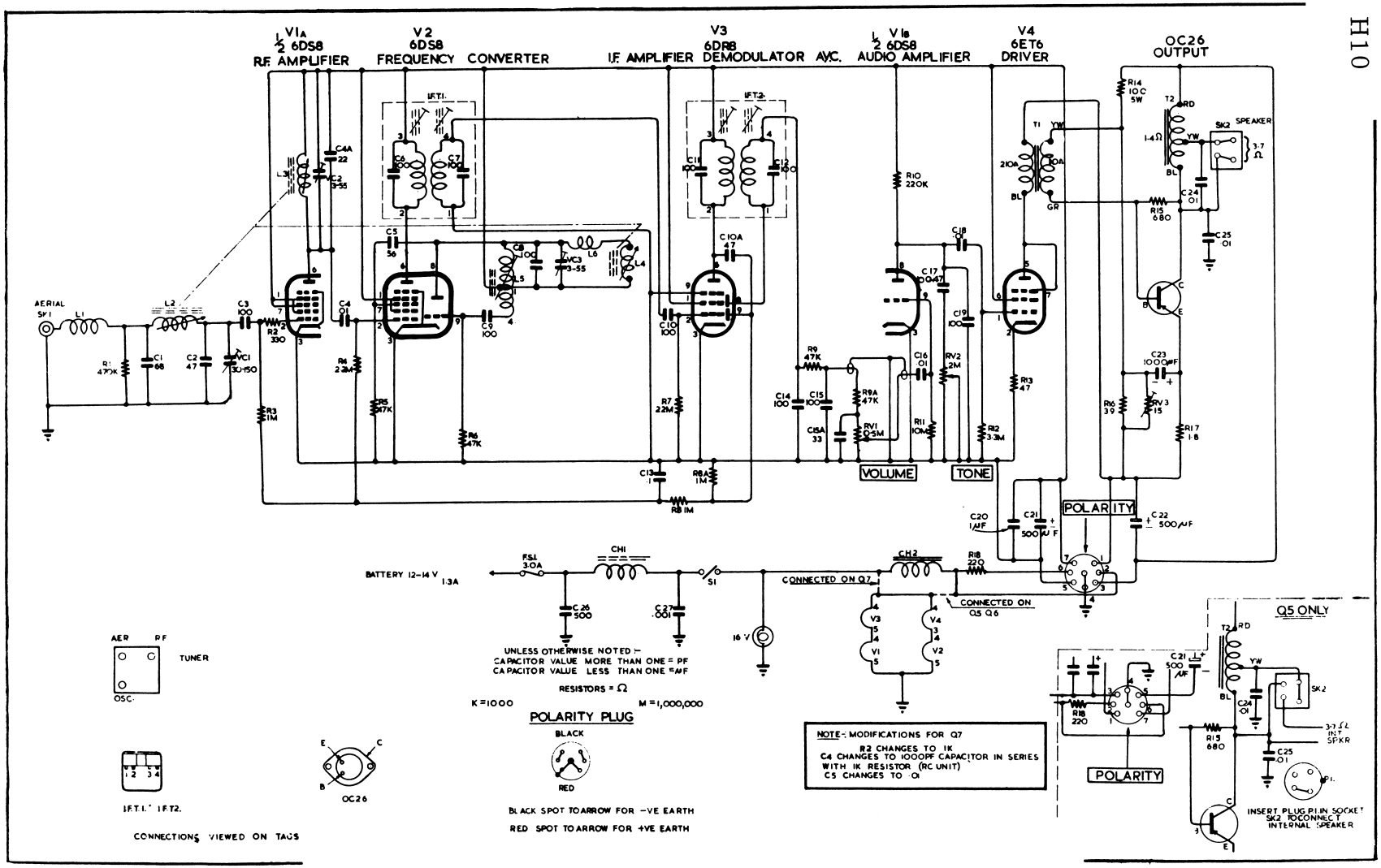

HMV CAR RADIO MODEL Q5, Q6, Q7

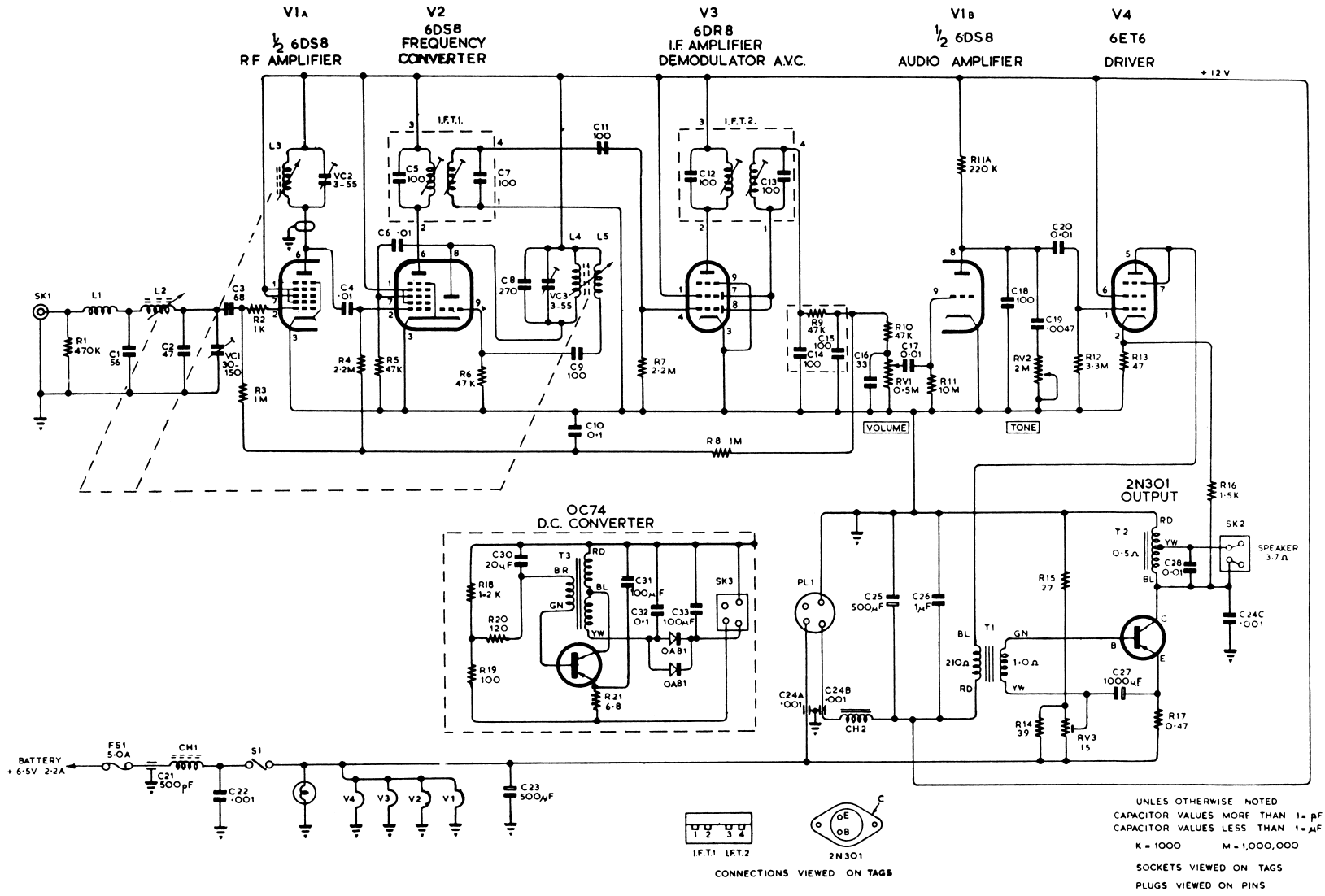

H10

HMV CAR RADIO MODEL R1, R4

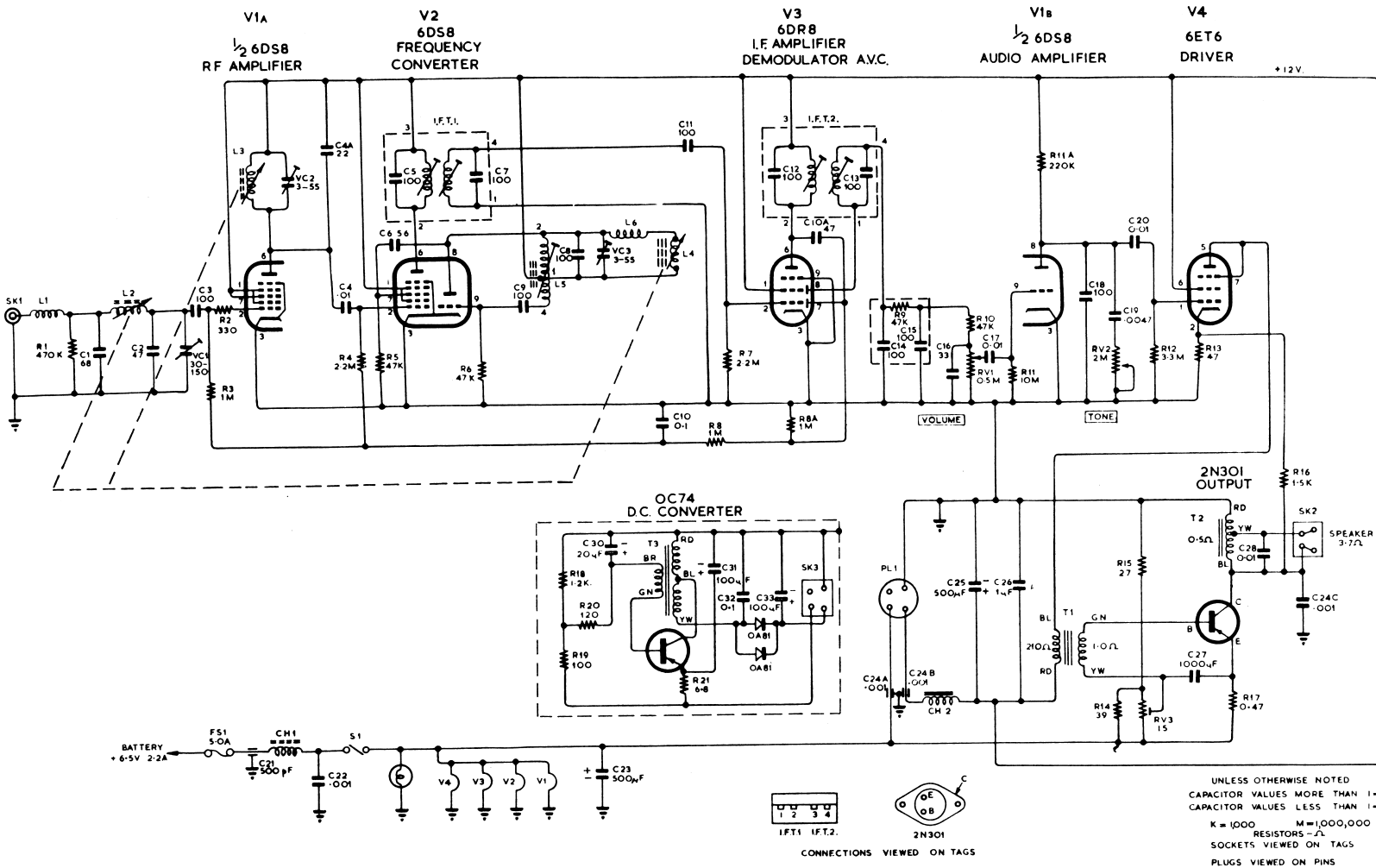

HMV CAR RADIO MODEL R6

ALIGNMENT

Use a Signal Generator modulated 30% at 400 c.p.s. for all alignment.

I.F. ALIGNMENT

Connect signal generator, via 0.1 uF capacitor, to grid of converter valve (Pin 2 of V2). Volume and tone controls fully clockwise.

Tune receiver to H.F. limit (carriage fully out).

Tune signal generator to I.F. and adjust the tuning cores of IFT2 Sec., IFT2 Pri., IFT1 Sec., IFT1 Pri., in that order, for maximum output.

Repeat sequence for maximum output.

NOTE 1: Models *Q1, Q5 and R1* were originally manufactured with English I.F. transformers and aligned at *470 Kc/s.* Later production of these models use Australian I.F. transformers and are also aligned at *470 Kc/s.*

Models *Q4 and R4* were manufactured with English I.F. transformers only and are aligned at *470 Kc/s.*

Models *Q6, Q7 and R6* are manufactured with Australian I.F. transformers only, and are aligned at *455 Kc/s.*

REPLACEMENT

English I.F. transformers may be identified by the RED plastic former visible inside the can, whereas the Australian I.F. transformers have clear plastic formers.

NOTE that with English I.F. transformers, IFT1 is identical to IFT2, and the two are interchangeable.

With Australian I.F. transformers, IFT1 is *NOT* identical to, and *NOT* interchangeable with, IFT2.

English I.F. transformers may be replaced with Australian I.F. transformers, provided that IFT1 and IFT2 are placed in their correct positions, i.e., IFT2 (906-0472) on the left-hand side of chassis (viewed from front), and IFT1 (906-0402) towards the centre of the chassis.

NOTE 2: Models *Q1, Q4, Q6, Q7, R1, R4 and R6* adjust cores through the base plate.

Model *Q5:* Adjust cores from top of chassis unless loudspeaker is removed.

R.F. ALIGNMENT

Connect signal generator to aerial input socket via dummy aerial as shown below.

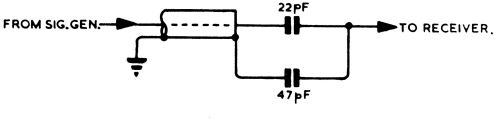

R.F. ALIGNMENT TABLE

Models Q1, Q4, Q5, R1 and R4 with English tuning units (identified by nylon screws on tuning cores). Check that pointer is directly behind set mark, with tuning carriage fully out. Adjust if necessary.

Operation	*Tune Generator To*	*Tune Receiver To*	*Adjust for Maximum Output*
1	1,610 Kc/s.	1,610 Kc/s. (Tuning carriage fully out)	VC1, VC2, VC3 (Aerial, R.F. and Osc. Trimmers)
2	1,100 Kc/s.	1,100 Kc/s. (White line on dial scale)	L2, L3, L4/5 (Aerial, R.F. and Osc. Tuning Cores)
3	REPEAT STEPS 1 AND 2 FOR MAXIMUM OUTPUT		
4	550 Kc/s.	550 Kc/s. (White line on dial scale)	Auxiliary Rods in L2 and L3
	Note: Auxiliary rods are only necessary when tracking errors are apparent at 550 Kc/s.		
5	REPEAT STEPS 2 AND, IF NECESSARY, STEP 4.		
6	Seal oscillator and R.F. trimmers, and auxiliary rods with wax, ensuring that excess wax does not fall on chassis around oscillator and R.F. trimmers. DO NOT SEAL AERIAL TRIMMER. Input to receiver should not exceed 3 Microvolts to obtain 0.45 volts output at 600, 1,100, and 1,500 Kc/s.		

R.F. ALIGNMENT TABLE

Models Q5, Q6, Q7 and R6 with Australian tuning units (identified by brass screws on tuning cores).

Operation	*Tune Generator To*	*Tune Receiver To*	*Adjust for Maximum Output*
1	Set position of cores in carriage as shown below. 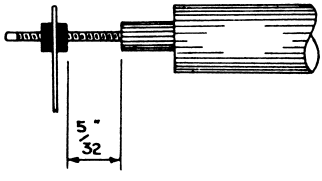		
2	1,630 Kc/s.	Tuning Carriage fully out	VC3 Osc. Trimmer
3	1,500 Kc/s.	1,500 Kc/s.	VC1 and VC2, Aerial and R.F. Trimmers
4	1,000 Kc/s.	1,000 Kc/s.	L2 and L3, Aerial and R.F. Tuning Cores
5	600 Kc/s.	600 Kc/s.	L5, Osc. Padder Core
6	Check that receiver tunes between 525-535 Kc/s. on low frequency end of band. If not, adjust.		L4 Osc. Tuning Core
7	Repeat operations 2 - 5 as necessary, to obtain optimum alignment.		
8	1,000 Kc/s.	1,000 Kc/s.	Adjust Pointer to Set Mark on Dial Scale
9	Seal oscillator, and R.F. trimmers, with wax. Ensure that excess wax does not fall on chassis around oscillator and R.F. trimmers. DO NOT SEAL AERIAL TRIMMER.		

Input to receiver should not exceed 3 microvolts to obtain 0.45 volts output at 600, 1000, and 1,500 Kc/s.

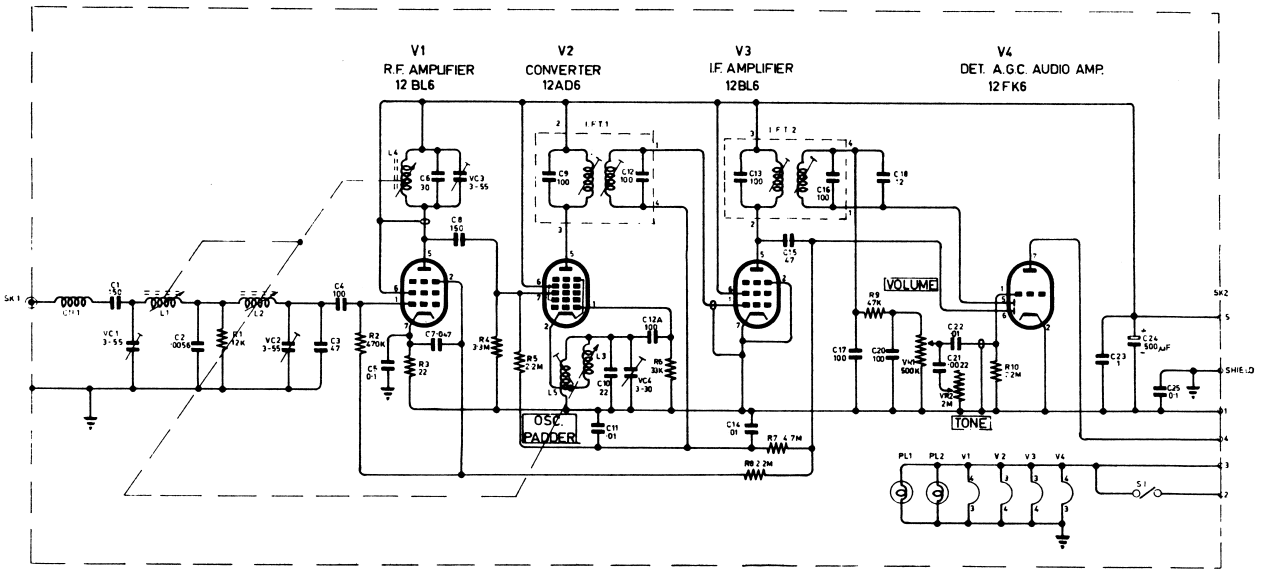

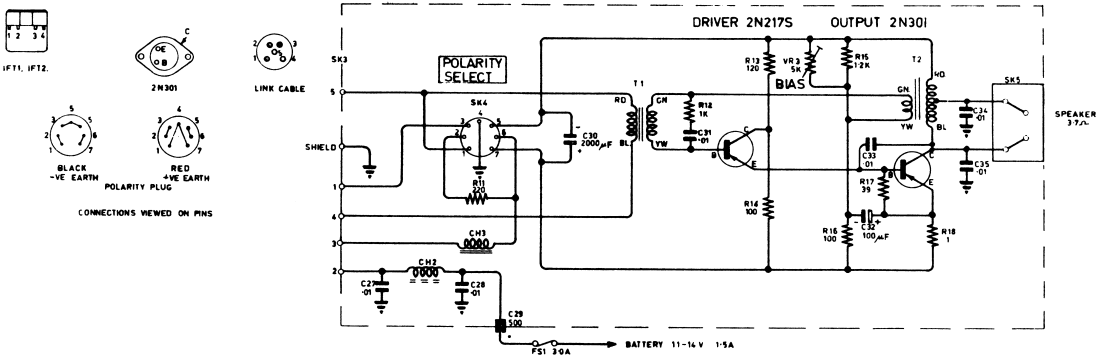

H11

H.M.V. CAR RADIO CIRCUIT DIAGRAM — Q2