QI-201 EX1

"TEN" SERVICE MANUAL

CAR COMPONENT SYSTEM SPECTRUM ANALYZER

Model QI-201EX1

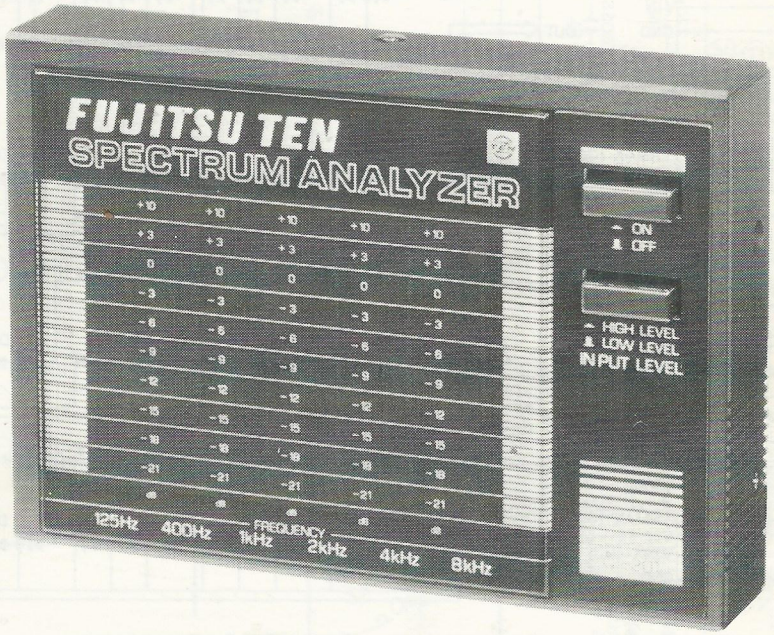

GENERAL

This power level indicator detects the voltage between the output signal of power amplifier and the ground and lights LED.

Features: ∘ Output signal is divided into 6 ranges (125 Hz, 400 Hz, 1 kHz, 2 kHz, 4 kHz, 8 kHz). LED lights in each frequency range.

∘ According to the output level of power amplifier, HIGH LEVEL and LOW LEVEL can be selected with HIGH LEVEL–LOW LEVEL switch.

NOTE: Do not use any other parts than a chip as a substitute for a chip even if a constant, specifications etc are same.

(But "0Ω resistor" of a chip is not provided as a replacement part. Use a copper wire etc.)

FUJITSU TEN LIMITED

COMPOSITION

SPECTRUM ANALYZER QI-201EX1

—Unit	QI-201	1
—Bracket	RN-MBU-1020	1
—Spacer	RN-MSE-1146	2
—Special screw	RN-MET-1113	2
—Bolt	RN-MBW-C5×16C-M-ZN2A	2
—Nut	RN-MNR-D5S	2
—Screw	RN-MTN-1H5×12-クロ	3

SPECIFICATIONS

FREQUENCY ..... Divided into 6 ranges (125 Hz, 400 Hz, 1 kHz, 2 kHz, 4 kHz, 8 kHz)

INPUT SENSITIVITY ..... Low level 260mV ± 3 dB (Input level when the eight LED lights up in 1 kHz range)
High level 910mV ± 3 dB

RELATIVE SENSITIVITY

LED	1	2	3	4	5	6	7	8	9	10
Relative sensitivity (dB)	−21 ±4	−18 ±3.5	−15 ±3.5	−12 ±3	−9 ±3	−6 ±2.5	−3 ±2.5	0	+3 ±2	+10 ±3.5

(Per channel)

ELEMENT FREQUENCY ..... 125 Hz ± 40%, 400 Hz ± 20%, 1 kHz ± 20%, 2 kHz ± 20%, 4 kHz ± 20%, 8 kHz ± 40%

LIGHTING LEVEL

Frequency (Hz)	125	400	1 k	2 k	4 k	8 k
Lighting Level (dB)	0 ± 5	0 ± 5	0 (Refer)	−2±3	−6±4	−8±5

(Input level when the eight LED lights up in per channel)

AMPLIFIER ..... BTL.

SPEAKER IMPEDANCE ..... 4 ohm

POWER INPUT ..... 12-Volt car battery, negative terminal to ground

Voltage ..... 13.2 VDC

Current ..... Approx. 0.2 ampere

SEMICONDUCTOR ..... 8 ICs, 6 Transistors, 8 Diodes, 60 LEDs

DIMENSIONS ..... 120(W)×84(H)×20(D)mm (4-23/32″, 3-5/16″, 0-25/32″)

WEIGHT ..... Approx. 0.3kg (0.7 lbs.)

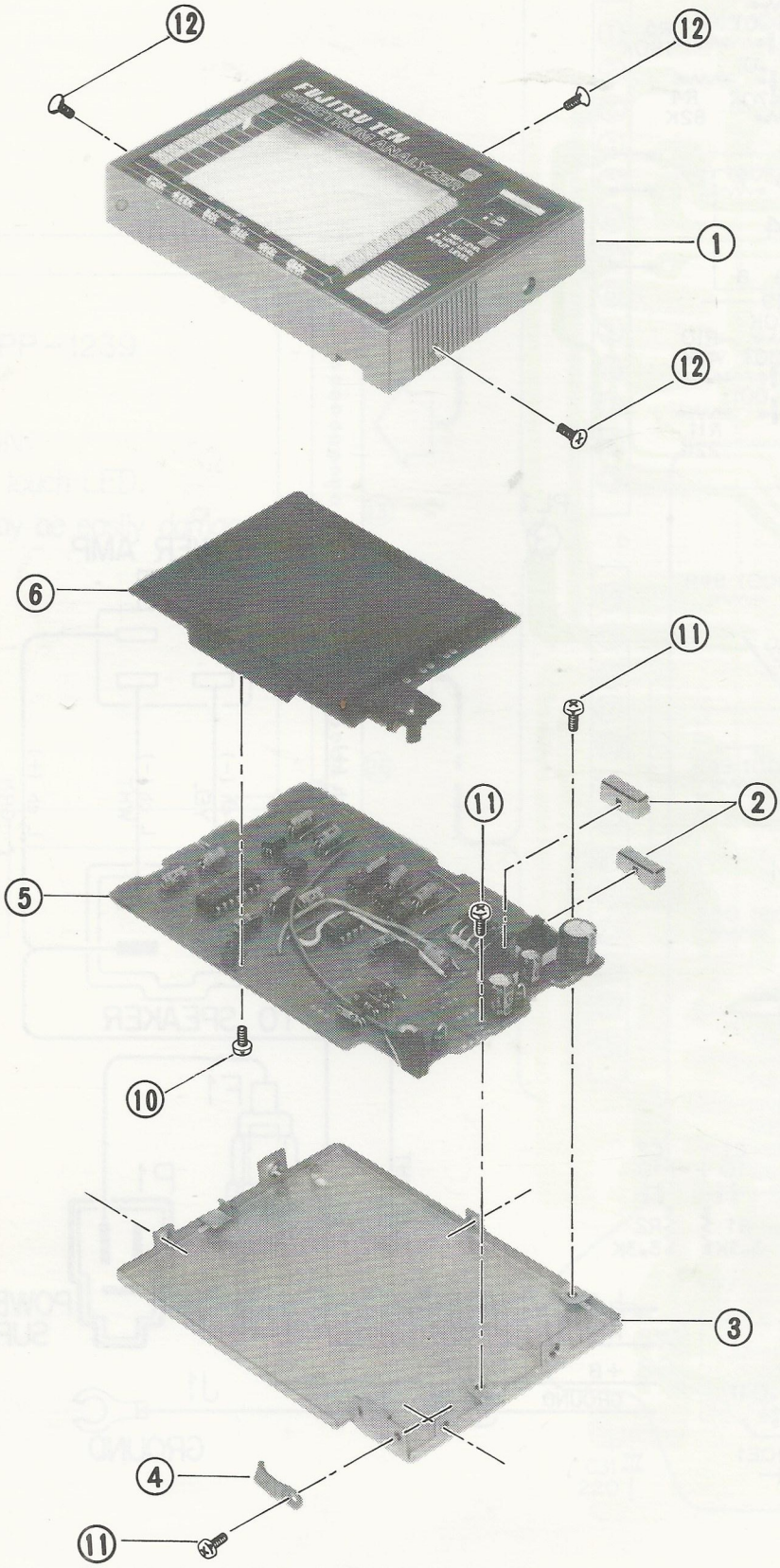

Fig. 3

REPLACEMENT PARTS LIST

Note: Main replacement parts are marked ○ in the remarks column.

Symbol No. (Fig. 1)	Stock No.	Description				Remark
CAPACITORS						
C 1, 2, 17	RN-ECE-M100V16-42	10 μF	16V		electrolytic	
C 3	RN-ECE-M101V6R3-42	100 μF	6.3V		electrolytic	
C 4	RN-ECK-CB1E473M/TP-1	.047 μF	25V		ceramic (chip)	
C 5, 11	RN-ECK-CB1H103M/TP-1	.01 μF	25V		ceramic (chip)	
C 6	RN-ECK-CB1H472M/TP-1	.0047 μF	25V		ceramic (chip)	
C 7, 13	RN-ECK-CB1H222M/TP-1	.0022 μF	25V		ceramic (chip)	
C 8, 14	RN-ECK-CB1H102M/TP-1	.001 μF	25V		ceramic (chip)	
C 9	RN-ECC-CSL1H681K/TP-1	680 pF	50V		ceramic (chip)	
C10, 16	RN-ECC-CSL1H221K/TP-1	220 pF	50V		ceramic (chip)	
C12	RN-ECK-CB1H682M/TP-1	.0068 μF	25V		ceramic (chip)	
C15	RN-ECC-CSL1H471K/TP-1	470 pF	50V		ceramic (chip)	
C18	RN-ECE-M101V16-41	100 μF	16V		electrolytic	
C19~24	RN-ECE-M1R0V50-32	1 μF	50V		electrolytic	
C25~30	RN-ECE-M2R2V50-32	2.2 μF	50V		electrolytic	
C31	RN-ECE-M221V16-51	220 μF	16V		electrolytic	
RESISTORS						
R 1, 2, 22	RN-ERG-IC332J/TP-1	3.3k ohm	5%	⅛W	metallic (chip)	
R 3	RN-ERG-IC561J/TP-1	560 ohm	5%	⅛W	metallic (chip)	
R 4	RN-ERG-IC823J/TP-1	82k ohm	5%	⅛W	metallic (chip)	
R 5	RN-ERG-IC184J/TP-1	180k ohm	5%	⅛W	metallic (chip)	
R 6, 8	RN-ERG-IC563J/TP-1	56k ohm	5%	⅛W	metallic (chip)	
R 7, 15	RN-ERG-IC273J/TP-1	27k ohm	5%	⅛W	metallic (chip)	
R 9, 11, 13	RN-ERG-IC223J/TP-1	22k ohm	5%	⅛W	metallic (chip)	
R10	RN-ERG-IC473J/TP-1	47k ohm	5%	⅛W	metallic (chip)	
R12, 14, 38~43	RN-ERG-IC333J/TP-1	33k ohm	5%	⅛W	metallic (chip)	
R16, 31, 32~36	RN-ERG-IC474J/TP-1	470k ohm	5%	⅛W	metallic (chip)	
R17	RN-ERG-IC274J/TP-1	270k ohm	5%	⅛W	metallic (chip)	
R18, 19	RN-ERG-IC334J/TP-1	330k ohm	5%	⅛W	metallic (chip)	
R20, 21	RN-ERG-IC394J/TP-1	390k ohm	5%	⅛W	metallic (chip)	
R23	RN-ERG-IC822J/TP-1	8.2k ohm	5%	⅛W	metallic (chip)	
R24	RN-ERG-IC222J/TP-1	2.2k ohm	5%	⅛W	metallic (chip)	
R25~30	RN-ERG-IC392J/TP-1	3.9k ohm	5%	⅛W	metallic (chip)	
R45~50	RN-ERG-IC104J/TP-1	100k ohm	5%	⅛W	metallic (chip)	
R51	RN-ERG-IC471J/TP-1	470 ohm	5%	⅛W	metallic (chip)	
R52	RN-ERD-AE2R2JB	2.2 ohm	5%	¼W	carbon	
ELECTRICAL						
IC 1	RN-EIC-LA6324	Linear-monolithic IC				○
IC 2	RN-EIC-LA6358	Linear-monolithic IC				○
Q 1~6	RN-EVS-2SA564-S	Silicon transistor				○
D 1, 2, 4~8	RN-EDS-10E1	Silicon diode				○
D 3	RN-EDT-RD4R7EB	Zener diode, 4.7V				○
MISCELLANEOUS ELECTRICAL						
S 1, 2	RN-ESB-2L2-189	Push switch				○
PL 1	RN-EPM-1054	Lamp				
P 1, 2, J 1, 2	RN-EWP-1071	Power and speaker				

Illus. No. (Fig. 3)	Stock No.	Description	Q'ty	Remark
MECHANICAL				
1	RN-MDP-1281A	Escutcheon	1	○
2	RN-MYB-1375	Button	2	○
3	RN-MCV-1269	Cover	1	
4	RN-MCE-1057	Clamp	1	
5	RN-MPC-1375A	PC Board, main	1	
6	RN-EPP-1239-QI-200	PC Board assembly, LED	1	
10	RN-MET-222	Special screw, 2.6×8mm	1	
11	F6-SBD-2.6×4S	Screw, 2.6×4mm	3	
12	F6-SSA-2.6×4S-M-ZN2A	Flat screw, 2.6×4mm	3	

NOTE: Specifications subject to change without prior notice.

SCHEMATIC

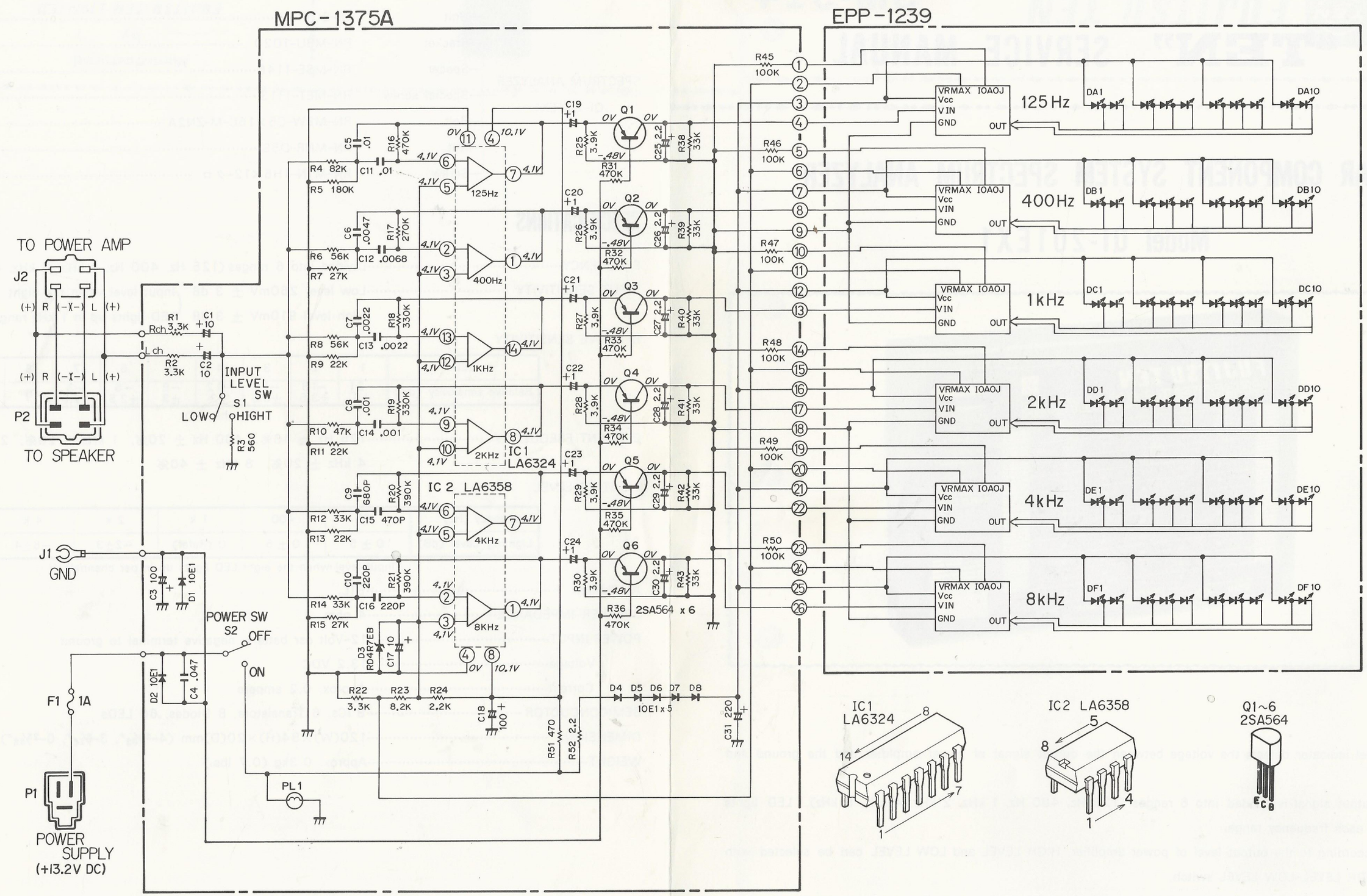

Fig. 1 (C24560201)

NOTES:

1. All capacitance in Micro farad, $P=10^{-12}$
2. All resistance in ohm, $K=10^{3}$
3. DC voltage against the chassis measured with 100k ohm/volt meter, power supply set at +13.2 VDC, no signal input.

WIRING ON PC BOAD

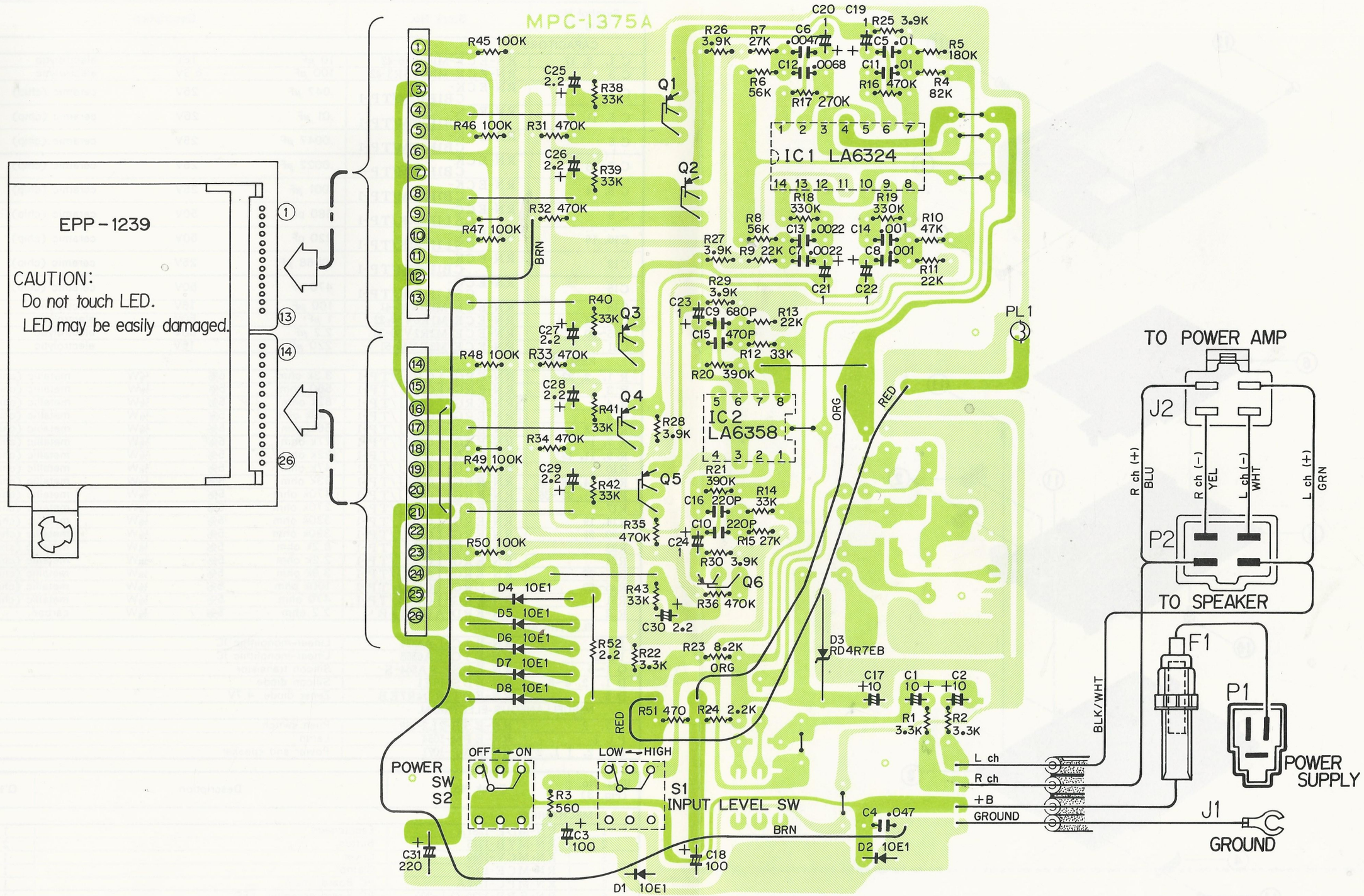

4.1V :	IC1-1, 2, 3, 5, 6, 7, 8, 9, 10, 12, 13, 14, IC2-1, 2, 3, 5, 6, 7
10.1V :	IC1-4, IC2-8
0V :	IC1-11, IC2-4, Q1~6-E, C
-4.8V :	Q1~6-B

Fig. 2 (C27560201)

NOTE: To operate Q1~6 by even weak signal, potential difference is made between ▒ pattern and ▒ pattern and ▒ pattern is used as a negative power source. Do not consider these two patterns to be same.