SERVICE MANUAL
DELUXE 8 TRACK SOLID STATE CAR STEREO WITH AM RADIO MODEL PU-601A

AMALGAMATED WIRELESS (AUSTRALASIA) LIMITED.
554 PARRAMATTA ROAD, ASHFIELD HEAD OFFICE—47 YORK STREET, SYDNEY
Branches: Brisbane, Hobart, Launceston, Newcastle, Melbourne, Perth, Wellington, N.Z.

* SPECIFICATONS:

MW BAND RADIO SECTION

Type of receiver : Superheterodyne, RF amplifier 1 stage, frequency converter, IF amplifier 1 stage, AGC. Detector, AF amplifier 1 stage, SEPP-OTL system power amplifier.

Tuning system : Manual μ tuning system.

Receiving frequency : 530KHz～1605KHz

Intermediate frequency : 262.5KHz

Maximum sensitivity : Better than 20dB

S/N ratio : Greater than 30dB

Selectivity : Atteeuation greater than 20dB when detuned 1000±10KHz

Electrical characteristics :

100Hz	HIGH	−1±3.0dB
	LOW	−1±3.0dB
4000Hz	HIGH	−14±5dB
	LOW	−25±5dB

Maximum output : 6W×2 or greater

Image ratio : Greater than 50dB (FM Tuning)

Intermediate frequency ratio : Greater than 45dB (FM Tuning)

AGC. Detector : Greater than 45dB (FM Tuning)

Output impedance : 4Ω×2

CAR STEREO SECTION

Reproduction system : 8 track, 4 channel stereo

Tape speed : $3\,^3/_4$ in./sec (9.5cm/sec)

Wow and Flutter : Less than 0.3% (R.M.S)

Maximum output : 6W×2 or greater

S/N ratio : Better than 45dB

Distortion factor : Better than 10% (at 3.5W output)

Electrical amplification : Greater than 100dB

Reproduction frequency range : 50Hz～10,000Hz

Left, right crosstalk : Greater than 30dB

Adjacent channal crosstalk : Greater than 40dB

Output impedance : 4 ×2

GENERALLZATION

Semiconductors used : 15 transistors, 4 diodes
2SC460 B or C×2
2SC454 ×1
2SC458 LC or D×4
2SC458 LB or C×4
2SB367B×4
1N34A×2 (diodes)
TR-9S×1 (diode)
SH-1×1 (diode)

Power supply Voltage: DC 10～16V
DC 13.2V (Reference voltage)

Power consumption (current) : Less than 1.5A

Weight : 6.6 lbs (3 kg)

Dimensions : Width 7.6 in (194mm)
Height 2.5 in (64mm)
Depth 8 in (203mm)

* COMPONENTS:

PT-601Y-04	Car stereo unit	1 Set
852-109-001	Power cord	1 Each
921-383-000	Accessory bag	1 Set
300-049-000	Rear suppot strap	1 Each
280-2790-00	Instruction manual	1 Each
085-004-001	Noise suppressor	1 Each
085-001-002	Noise suppressor	1 Each

Printed in Japan 298-140-00

＊INTRODUCTION:

- The A.W.A. PU601A is a versatile combination 8 track stereo player with built in AM radio to tune the medium wave broadcast band.
- Particular attention has been given to the design of the stereo mechanism to eliminate the effects of vibration and the unit is fitted with safety type controls to comply with the automotive safety requirements.
- Solid state circuitry using silicon transistors, single end push/pull amplification with transformerless output stages ensures excellent high fidelity reproduction and tone response.
- In addition the PU601A can tune FM frequency modulation range by inserting a special cartridge which is available as an optional extra.

＊INSTALATION OF MAIN UNIT:

The main unit of the solide state car stereo is installed by using various screws, nuts and washers contained in the accessory bag. This solide state car stereo set can be mounted in an automobile using a DC. 12 V battery in a negative-ground system.

＊UNDER DASH MOUNTING:

(Refer to Fig. 1.)

Install the car stereo set Mounting bracket under the instrument panel of the automobile where automobile driving will not be disturbed.

Be sure to mount the rear of the main unit to the vehicle body by using the accessory rear Mounting bracket.

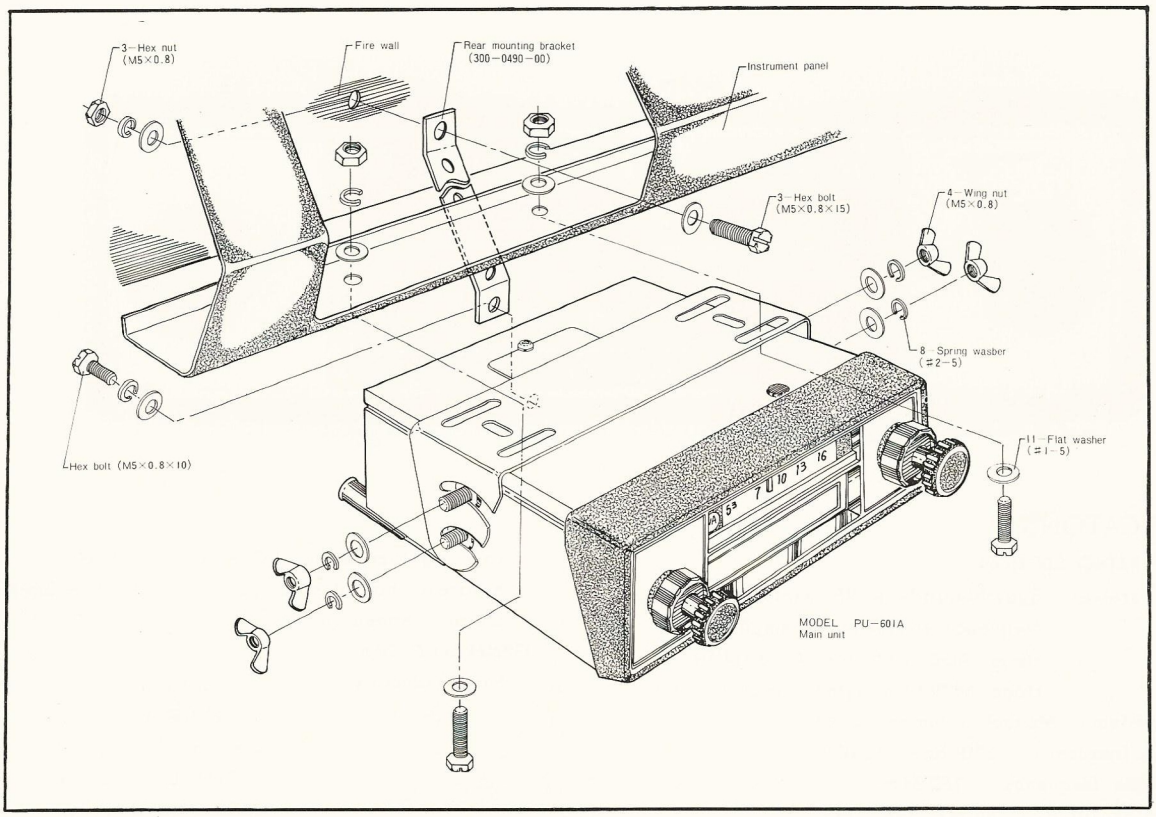

Fig.1.

＊CONNECTION OF POWER SUPPLY LEADS: (Refer to Fig. 2.)

Connect the red lead of the connection cord to the fuse box or ignition switch and the positive (＋) terminal of the ampmeter of the automobil.

Connect the black lead to the vehicle body (－).

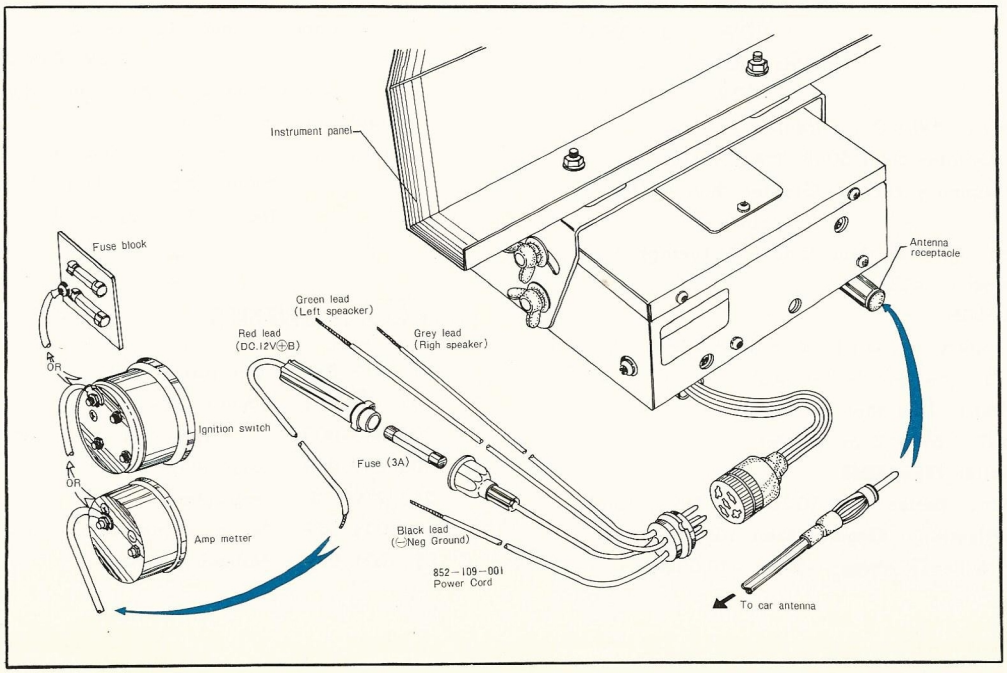

Fig.2.

* SPEAKER INSTALLATION:

Your Stereo is designed for use with 2 or 4 speakers and the best performance is achieved with the use of matched speakers of 8 or 4 ohm impedance respectively. Mixing speakers of different ohmage can cause mismatch in the impedance. This will result in poor volume and tone quality.

NOTE : The Stereo unit must be turned off while installing speakers in order to avoid damage to the unit due to possible shorting of speaker leads during installation process.

You must always install a minimum of two speakers, one on the right side of the car and one on the left to get the proper stereo effect. For the ultimate in stereo performance, install a set of 4 or 8 ohm speakers, two in front and two in rear (right and left sides of car).

Possible speaker locations are shown in Fig. 3, 4 connections should be made as shown in Fig. 5.

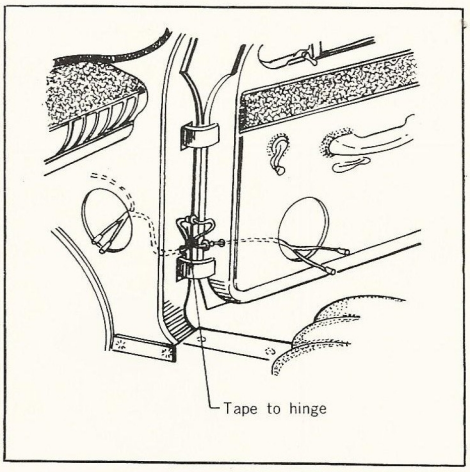

Fig.3.

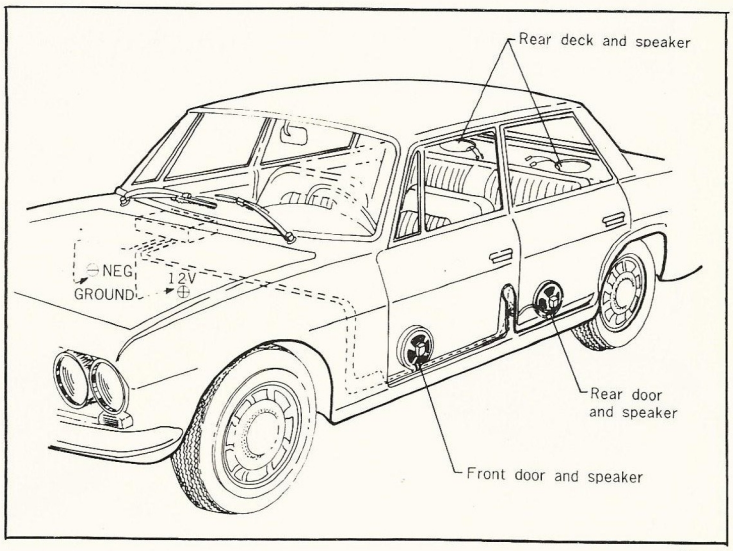

Fig.4.

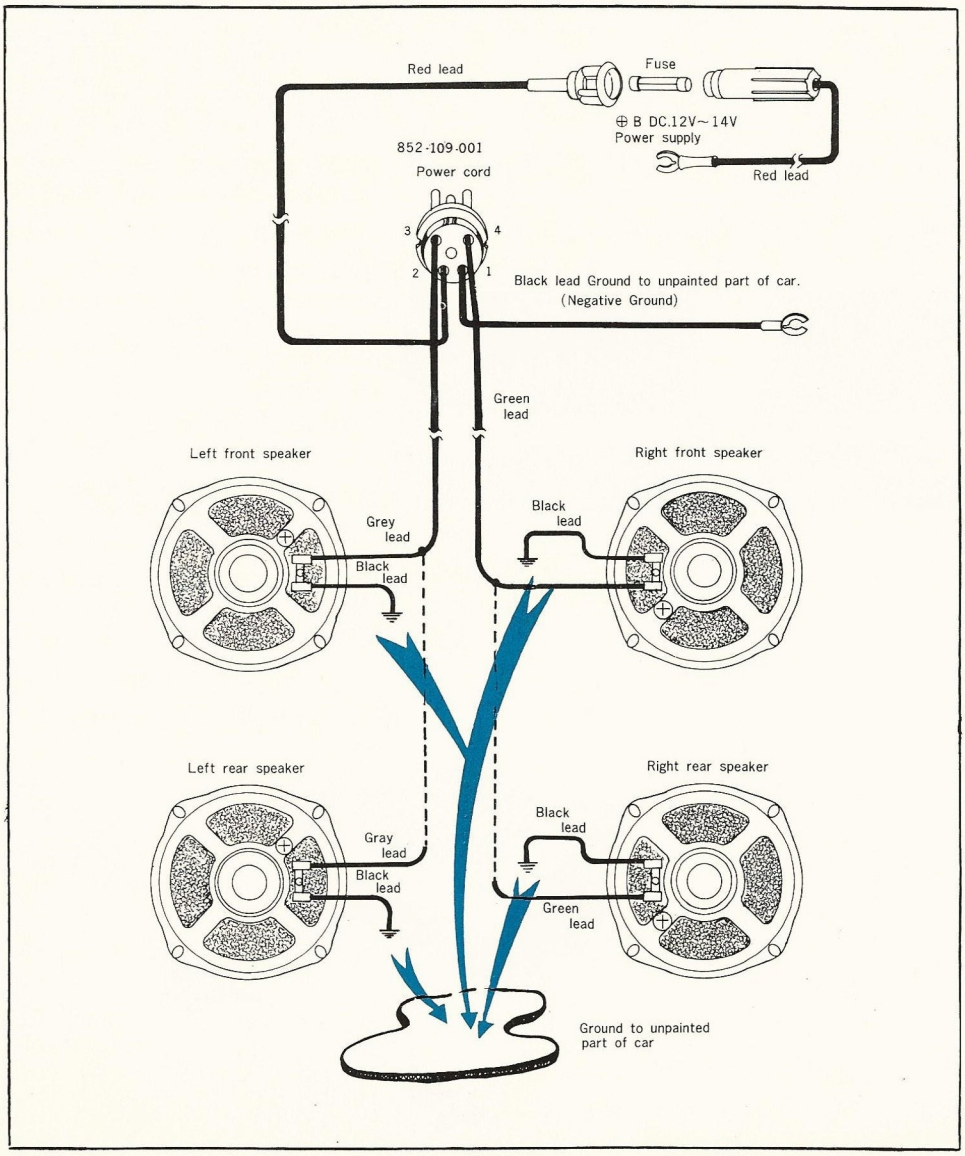

Fig.5.

⊙SPEAKER INSTALLATION MODEL SKA—010—000. (Refer to Fig. 6. 7. 8)

SPECIFICATIONS:

Rated Input·····5W
Maximum Allowable Input·····6W
Load Impedance·····4Ω
Speaker Diameter·····5″ (127 m/m)
Dimensions of speaker Box·····D 5.5″ (140m/m)
W 5.8″ (150m/m)

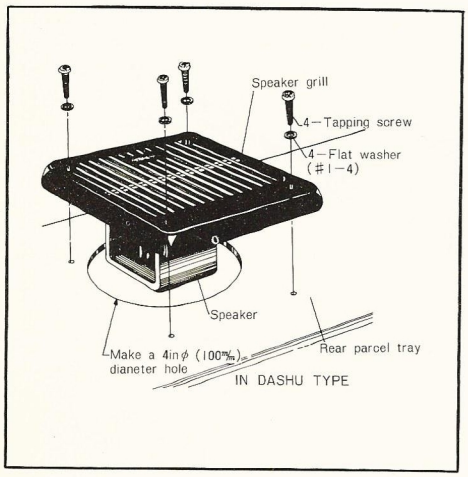

Fig.6.

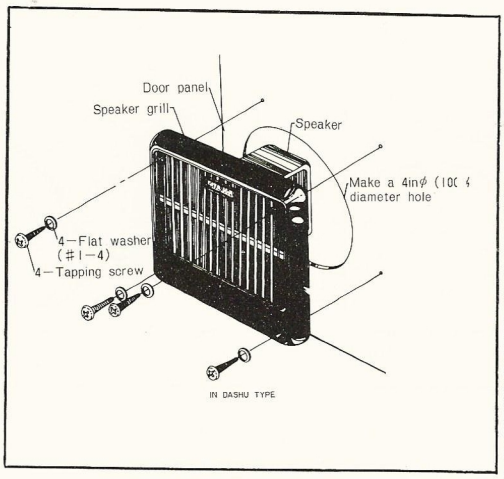

Fig.7.

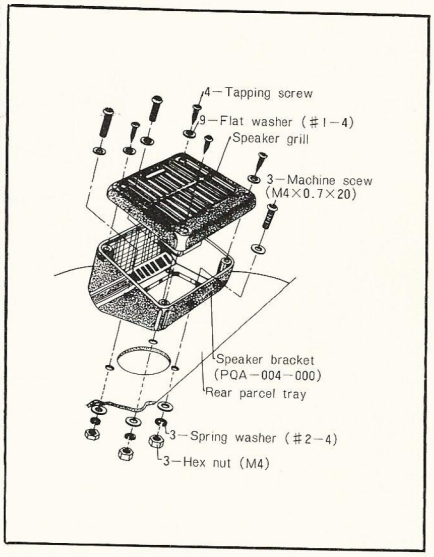

Fig.8.

⊙SPEAKER INSTALLATION MODEL SKA—020—000. (Refer to Fig. 9)

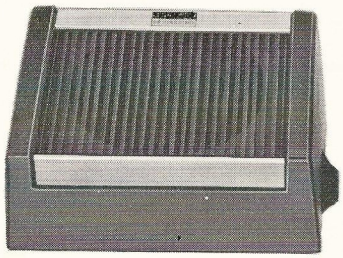

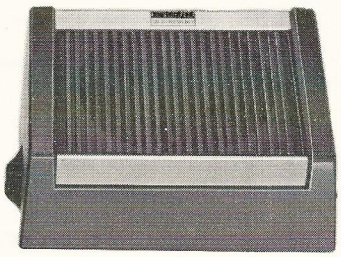

SPECIFICATIONS:

Maximum Allowable Input·····7.5W
Load Impedance·····4Ω
Speaker Diameter·····5.5″ (140m/m)
Dimensions of speaker Box····· D 7.8″ (173m/m)
W 8.3″ (210m/m)
H 3.7″ (95m/m)

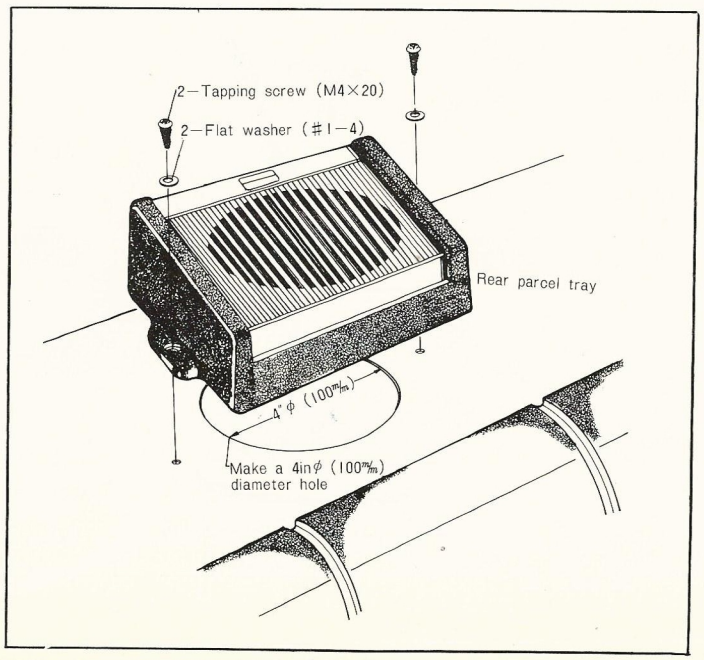

Fig.9.

⊙SPEAKER INSTALLATION MODEL SKA—022—000 or (001).

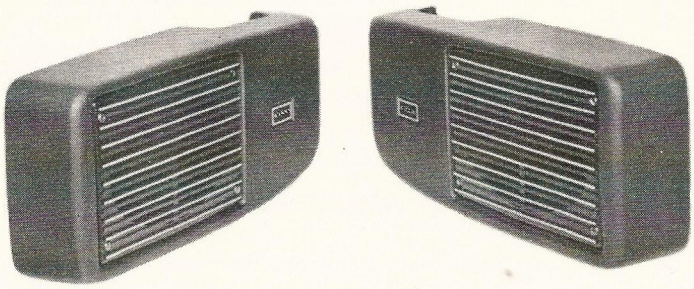

SPECIFICATIONS:

Rated Input·····4W
Maximum Allowable Input·····6W
Load Impedance·····4Ω (SKA-022-000)
8Ω (SKA-022-001)
Speaker Diameter·····4"×6" (100.2m/m×150.2m/m)
Dimensions of speaker Box····· W 11.8" (300m/m)
D 5" (127m/m)
H 2.26" (55m/m)

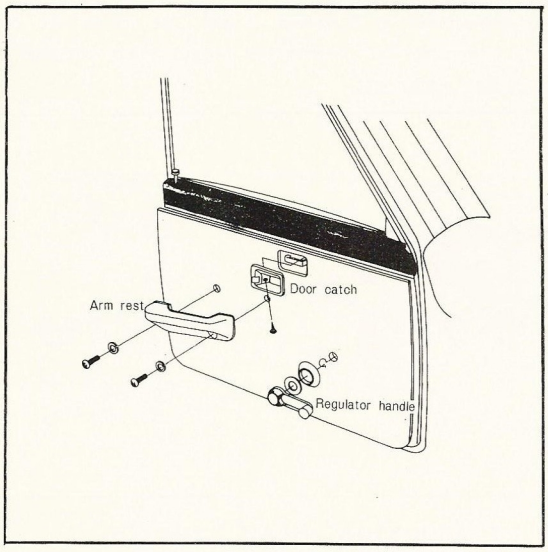

Fig.10.

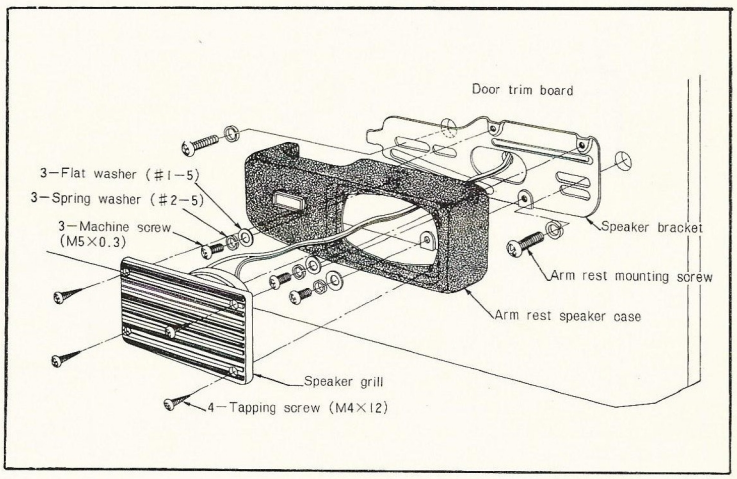

Fig.11.

＊INSTALLATION OF THE NOISE SUPPRESSORS:

1. Generator or Alternator noise. (Refer to Fig. 12. 13)

The problem of generator noise is solved by attaching capacitor type noise suppressor 085-001-002 to terminal "A" of the generator.

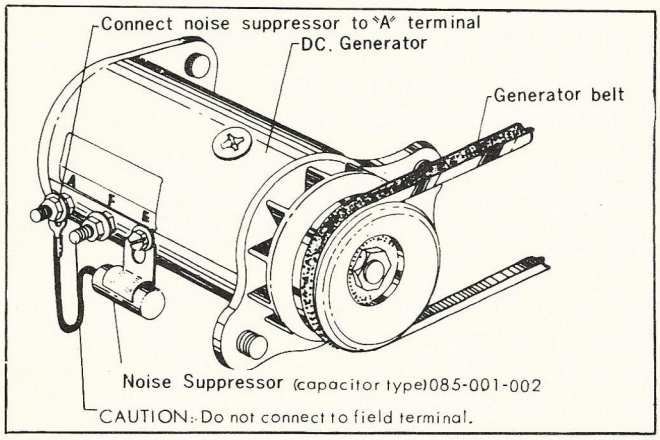

Fig.12

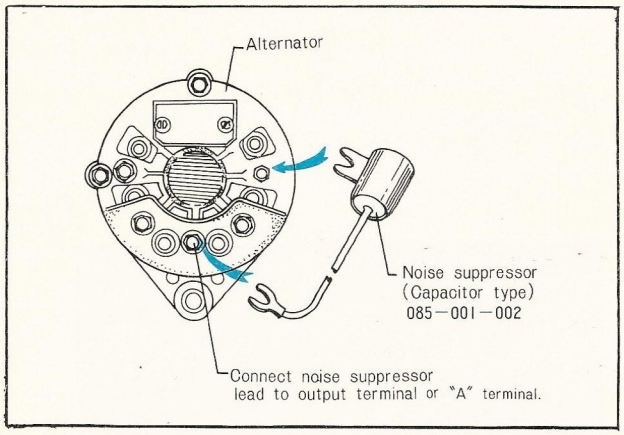

Fig.13.

2. Ignition coil noise.

(Refer to Fig. 14)

The problem of ignition coil noise is solved by cutting the high-voltage cord that connects the ignition coil to the distributor at a position 75m/m (3") from the center of the distributor and placing resistance type noise suppressor 085-004-001 between the two ends of the cut cord.

Note : Before installing the above noise suppressor, check the high-voltage cord to ascertain if it has any noise sppression resistance. If the high-voltage cord is of the noise suppression type, the use of the noise suppressor is not necessary.
However, if the high-voltage cord is cut, a new cord must be used to replace it.

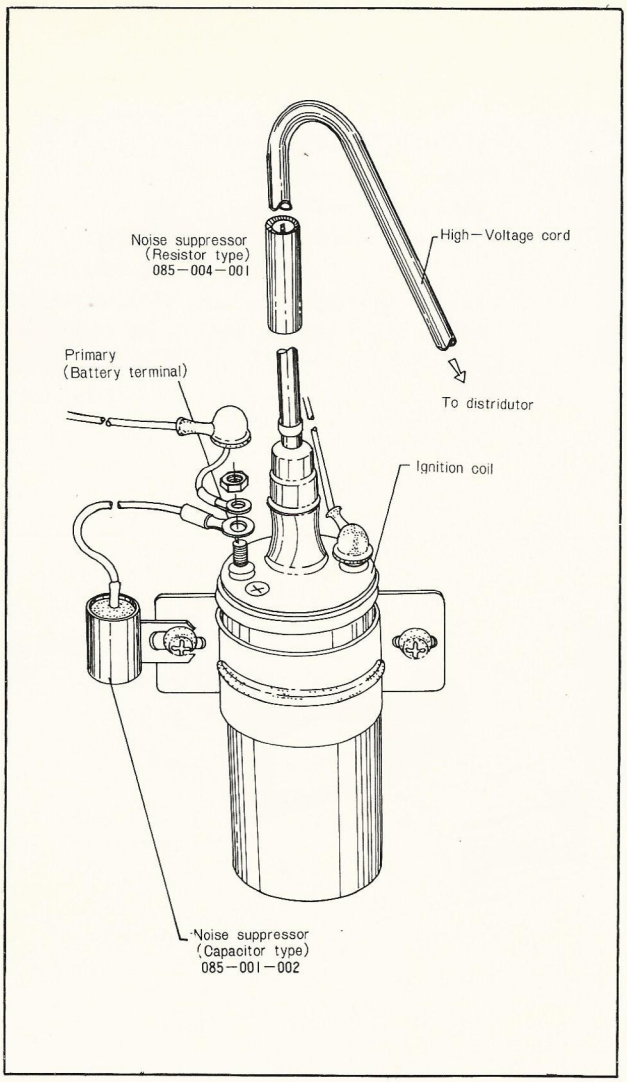

Fig.14.

*CONTROL OF VARIOUS MECHANISMS:

· HEAD POSITION AND HEAD ANGLE CONTROL:

When the position and angle of the reproducing head in-respect to the recording tape is not correct; the volume is not sufficient, the tone becomes bad and this results in crosstalk. Adjust both the previously mentioned area on the back of the stereo reproduction head (head position) and azimuth (head angle) by means of the adjusting screw.

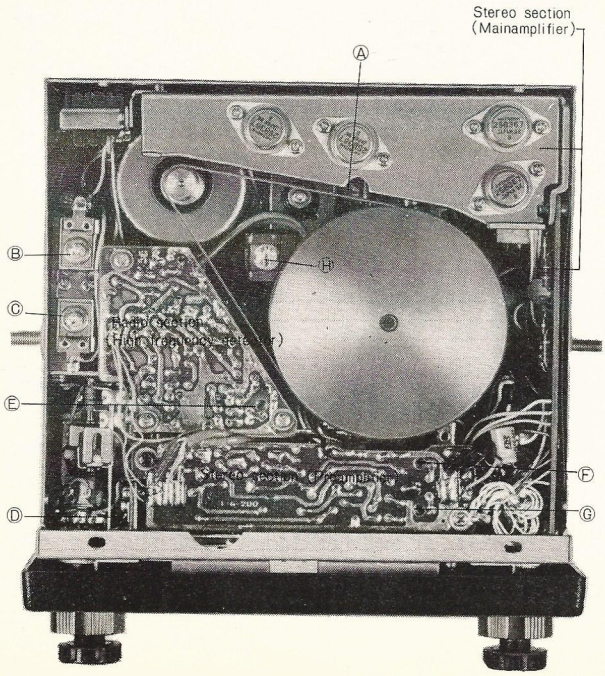

Ⓐ Azimuth adjustment screw.
Ⓑ OSC Trimmer (Circuit diagram TC-2)
Ⓒ RF trimmer (Circuit diagram TC-3)
Ⓓ Antenna trimmer adjustment (adjustment is made at the pack insertion port)
Ⓔ Sensitivity (gain) adjustment (Circuit diagram VR-3)
Ⓕ Left amplifier (gain) adjustment
Ⓖ Right amplifier (gain) adjustment
Ⓗ Area adjustment

METHOD OF ADJUSTING HEAD AREA.

(Refer to Fig. 15)

After balancing the left and right sides using the balance adjustment knob, select the head position for channel 2 (tracks 2 and 6) with the test tape, turn the area adjustment screw and adjust the output to maximum. After the 2 channel adjustment is finished, check the areas for channels 1, 3 and 4. (To confirm the output, use a vacuum voltmeter, tester meter etc.)

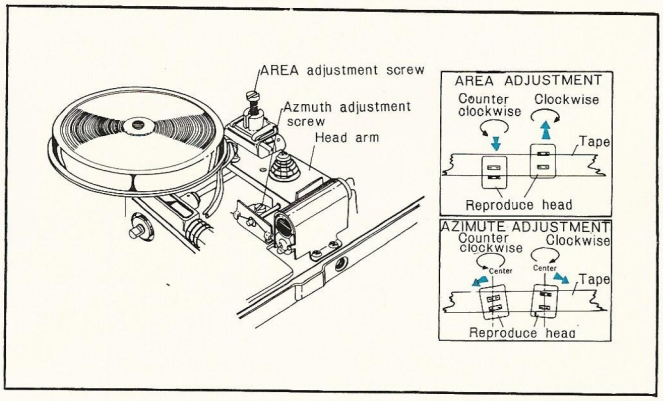

Fgi.15.

METHOD OF ADJUSTING HEAD AZIMUTH.

(Refer to Fig. 15)

Turn the azimuth adjustment screw so that the output is maximum for any one of the channels using the test tape.

NOTE 1 : To check the output, use a vacunm voltmeter or tester meter.

NOTE 2 : Since the area adjust can be disturbed when making the azimuth adjustment, repeat the area and azimuth adjustments several times.

ADJUSTMENT WITH NO TEST TAPES. (USING 8-TRACK PACKS)

Adjust by means of the area adjusting screw for a maximum output with the head position at channel 2 (tracks 2 and 6) using a music tape with good treble. Then confirm the area for channels 1, 3 and 4.

METHOD OF ADJUSTING OUTPUT OF RIGHT AND LEFT CHANNEL AMPLIFIERS.

(Refer to Fig. 16)

First remove the escutcheons (black resin panels) and escutcheon assemblies. Adjust the output by inserting a small insulated driver into the amplifier output adjustment screw holes.

Position the knobs so that the treble is maximum, the bass is maximum and the balance is in the center position.

NOTE : Make this amplifier output adjustment only in cases when parts are replaced during repairs etc.

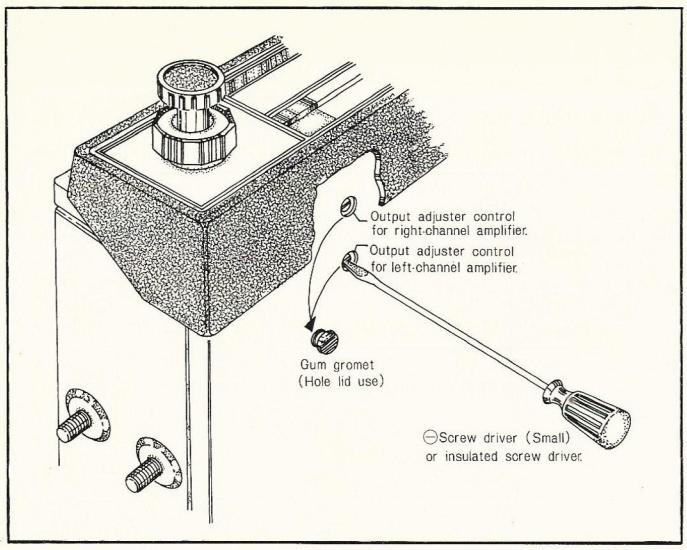

Fig.16.

METHOD OF ADJUSTING ANTENNA TRIMMER.

(Refer to Fig. 17)

Adjusting the antenna trimmer results in an increase in the sensitivity. This should be done only after repairs or attachment of the main unit, in cases where the antenna or antenna cable is replaced or in cases when the radio sensitivity is effected by noise.

METHOD OF ADJUSTMENT.

With the volume and tone both at a maximum, turn the antenna trimmer adjustment screw and adjust the sensitivity so that the white noise received at the 1400kHz position on the dial is loud.

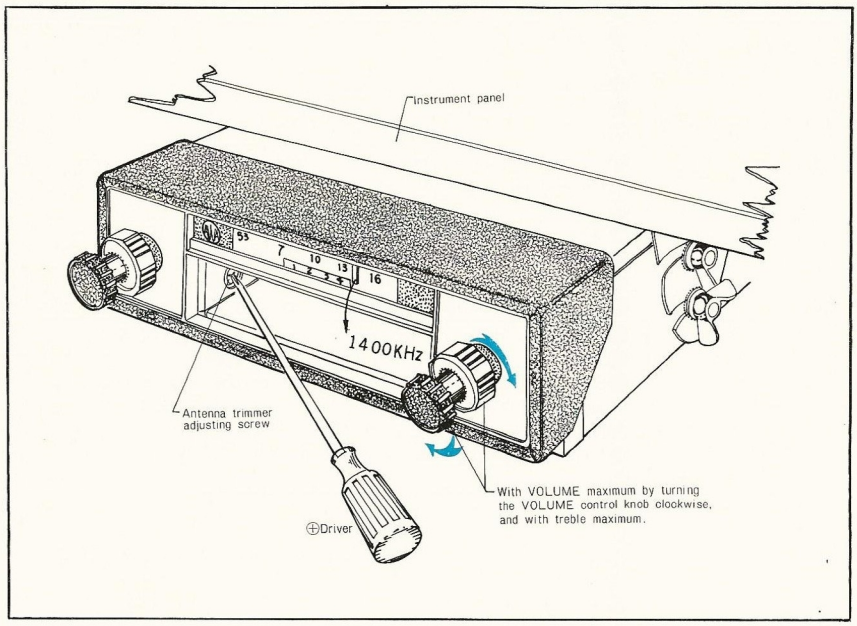

Fig.17.

CARE OF TAPE PLAYER.

For continued optimum player performance, tape head should be cleaned occasionally. Use a commercially available tape head cleaning device or clean as indicated in Fig 18.

To assure a long playing life, cartridge should be stored in a clean, dry place with open (tape) end down to keep out dust.

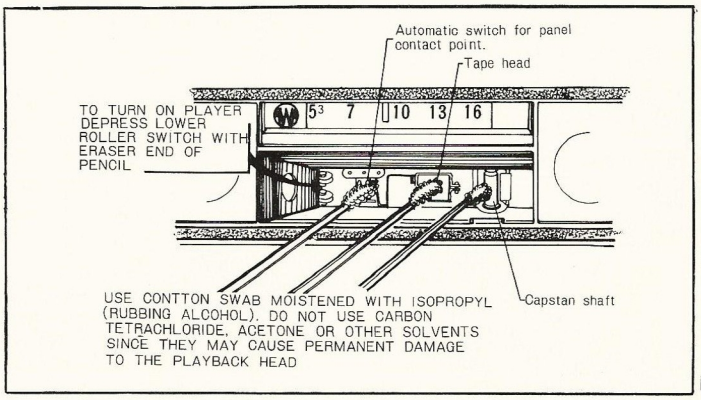

Fig.18.

SYMPTOM	POSSIBLE CAUSE	REMEDY
Poor Playback	Oxide build-up on head	Clean head and drive capstan as instructed in Fig 18. (To insure proper cleaning, a qualified serviceman should clean head.)
Slow Playback (Poor Drive)	Faulty tape cartridge mechanism	Try 2 or 3 other tape cartridges, If trouble does not clear up, contact qualified service man.
No Power	Blown Fuse	Replace fuse. To remove fuse, press ends of fuse holder together and twist the end held in right hand counter-clokwise.

*TROUBLE SHOOTING PROCEDURE (Refer to the circuite diagram and printed circuit board)

Symptom		Faulty Circuit	Trouble and causes	Corrective action
Both tape and radio bad	No sound at all	Power supply circuit	●Short or disconnection in filter choke 010-082-001 ●Short or disconnection in choke 009-045-000 ●Defect or decective soldering in pass-throuth capacitor CT_3 (040-008-000) ●Faulty contacts or mechanism of SW_1 (013-269-000) or SW_2 ●Bad connection of power supply cord ●Disconnection of R_{152}	Replace. // Replace· of repair soldering Replace. Repair cord Replace.
	No sund from one of the channel	Output circuit	●Disconnection of speaker voice coil ●Defect or defective soldering in pass-throath capacitors CT_1 or CT_2 (040-008-000). ●Disconnection or defective soldering in C_{82} or C_{112} ●Disconnection or short in output transistor 2SB367. ●Disconnection or damage in R_{70} or R_{71} (R_{120} or R_{121}).	Replace. Replace or repair. soldering // Replace. //
		Driver circuit	●Disconnection or short in primary or secondary of input transformer 006-066-001. ●Disconnection or short in 2SC281 or 2SC458L ●Disconnection or capacity drop in C_{57} or C_{107}	Replace. //
	Reproduced sound is weak	Output or driver circuit	●Capacity drop in C_{62} or C_{112} ●Defective 2SB367 ●Defective 2SC458L or 2SC281 ●Disconnection or capacity drop in C_{57} (C_{109}) ●Increase if resistance in R_{60} or R_{110}	Replace. // // // //
	Sound is distorted	Output or driver circuit	●Defect or pair damage in 2SB367 ●Defective 2SC458L or 2SC281 ●Short in C_{60} or C_{61} (C_{110} or C_{111}) ●Defects in thermistor Th_1, Th_2, Th_3, or Th_4 (002-014-000) ●Disconnection or short in R_{66} or R_{68} (R_{116} or R_{118}) ●Disconnection or short in R_{67} or R_{69} (R_{117} or R_{119}) ●Disconnection or short in R_{61} or R_{62} (R_{111} or R_{112})	Replace. // // // // // //
	Vibrations	Output or driver circuit	●Capacity drop or disconnection in C_{153}, C_{154}, C_{155} ●Short or change in resistance of R_{152} ●Short or defective soldering or screw thghtening in ground point ●Disconnection in C_{58} or C_{108} ●Short or change in resistance in R_{65} or R_{115} ●Disconnection in C_{60} or C_{61} (C_{110} or C_{111})	Replace. // Replace solder or tighteen screw Replace. // //
Radio is usual, stereo is bad	No sound at all	Motor circuit	●Short in C_{162} ●Defective motor 020-018-000 ●Faulty contacts or mechanism in SW_3 (013-269-000) ●Disconnection in R_{151} ●Short in C_{151} or C_{152}	Replace. // // // //
	No sound from one channel	No sound at all	●Head lead wire disconnected ●Disconnection in C_{51} (C_{101}) ●Disconnection or short in 2SC458LG or 2SC458L ●Disconnection in C_{55} (C_{105}) ●Defective connections or damage in VR-1 or VR-2 ●Disconnection in R_{50} (R_{109}) ●Disconnection or shorts in other bias resistors	Repair or replace. Replace. // // // // //
	Noise distortion	Initial coupling circuit	●Defective 2SC458Lg or 2SC458L	Replace.
	Vibrations		●Defective soldering in head lead wire ●Defective reproducing head 011-016-000	Readjust. //
	No treble		●Head azimuth defective ●Head is dirty or defective ●Capacity change or disconnection in C_{52} (C_{102}) ●Short in R_{56} (R_{106})	Replace. Clean or replace Replace. //
	Heads can not be changed	Plunger circuit	●Faulty contacts or mechanism in plunger swith 012-285-000 ●Rear short in plunger coil ●Internal resin deformed by plunger heat ●Gearing of camshaft and cam ratchet defective	Replace. // // Repair.

Symptom		Faulty Circuit	Trouble and causes	Corrective action
Tape is normal but radio is bad	No sound at all	Power supply circuit	●Faulty contacts or mechanism in SW_4 (013-249-000) ●Disconnection in R_{14} ●Short in D_3 (TR-9S) ●Short in C_{17} or C_{20}	Replace. // // //
		Detector circuit	●Faulty contacts or machanism in VR-3 ●Short in C_{18} or C_{19} ●Disconnection in R_{13} ●Disconnection in D_2 (IN34A) ●Disconnection in primary or secondary of intermediate frequency transformer 005-056-000	Replace. // // // //
		RF frequency converter or intermediate frequency circuits	●Disconnection or short in 2SC460 or 2SC454L ●Disconnection in primary or secondary of intermedate frequency transformer ●Disconnection or short in ANT, RF or OSC coil ●Disconnection in C_2, C_9 or C_{21} ●Short in Tc_1, Tc_2, Tc_3, C_1, C_6 or C_7 ●Disconnection in 010-049-000 ●Defect or defective soldering in antenna part ●Short in R_7, C_{11} or C_{12} ●Dustcore of μ tuner RF.ANT damged	Replace. // Replace μ tuner Replace. // // Replace Replace. //
	Sund is weak or sensitivity is bad	Power source circuit	●Disconnection or capacity drop in C_5, C_{10}, C_{13}, C_{14} or C_{15} ●Defective 2SC460 or 2SC454L ●Defective D_2 ●Change in resistance of R_2, R_6, R_{12} or R_{13} ●Dustcore of μ tuner RF.ANT damged	Replace. // // // //
	Sound is destorted	AGC circuit	●Disconnection or resistance change in R_1, R_8, R_9 or R_{11} ●Disconnection in C_{16} ●Disconnection or short in D_1 (IN34A) ●Short in R_8	Replace. // // //
		High or intermediate frequency circuits	●Defective 2SC460 or 2SC454 ●Disconnection or resistance change in R_4, R_5, R_9 or R_{10}	Replace. //
	Vibrations	Power source circuit	●Disconnection or capacity drop in C_8, C_{17}, or C_{20} ●Disconnection in D_3 (TR-9S) ●Capacity drop in C_3 or C_4	Replace. // //
Bad when using radio pack			●Damage or faulty contacts in connector pin assembly 074-040-000 ●Disconnection or faulty soldering in lead wire from 074-040-000 ●For other repairs concerning the FM radio pack, please refer to the radio pack service manual	Replace. // //

In addition to the above, check for defective Soldering, shorts or disconnections in the lead wires.

* EXPLODED VIEW (See Parts List) FIGURE. 19. 20.

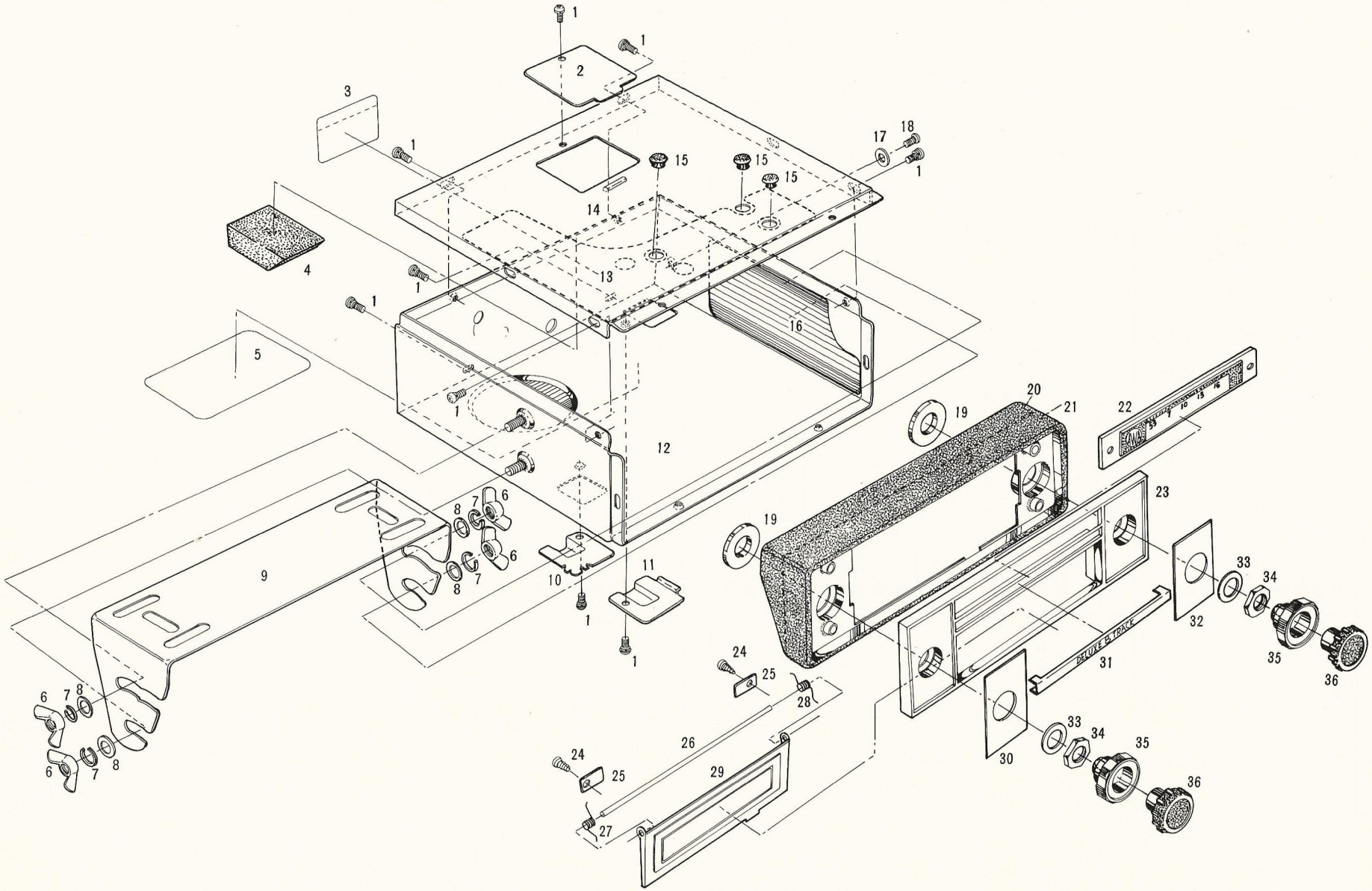

FIGURE. 20

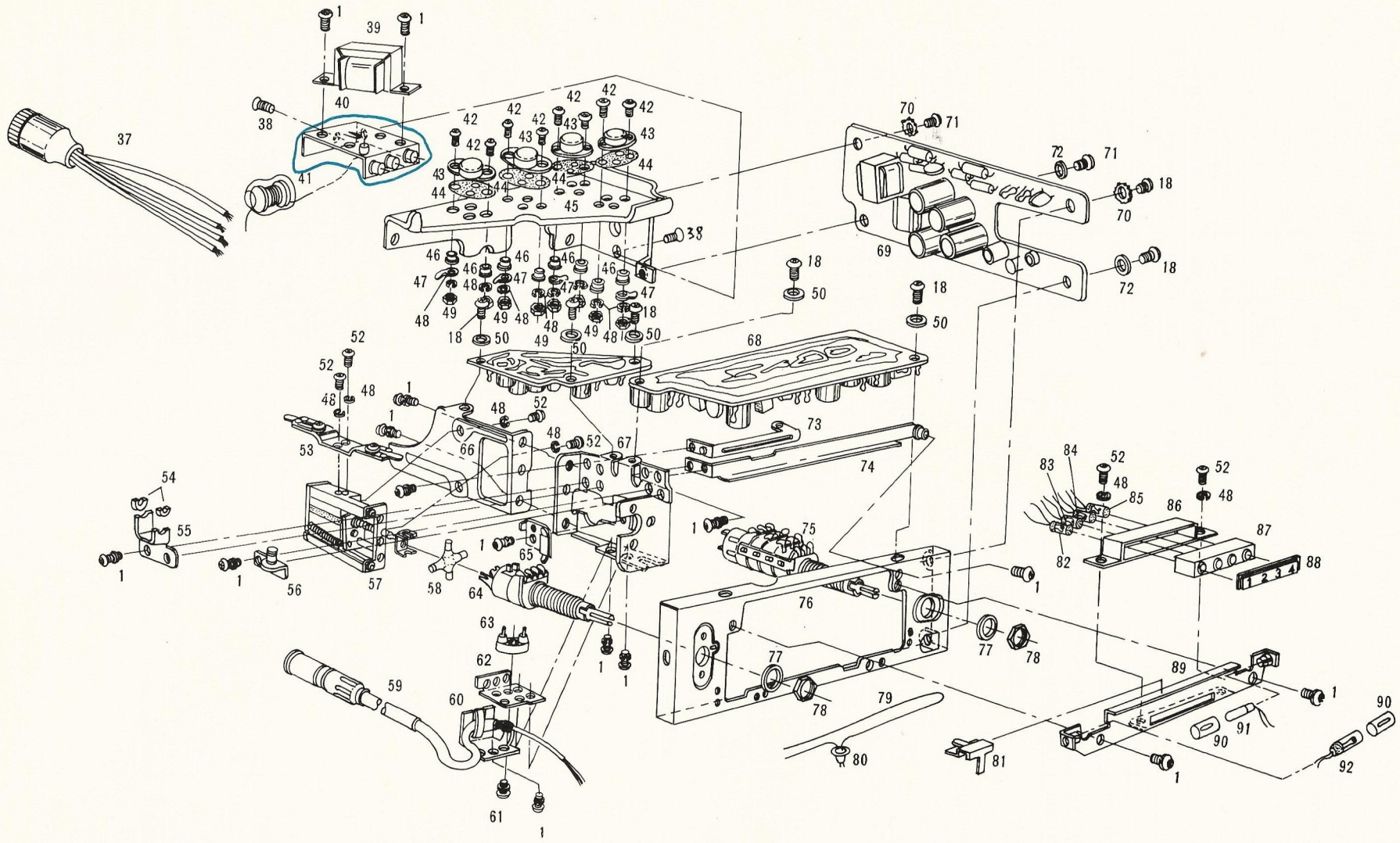
1
39
40
38
37
41
42
43
44
45
46
47
48
49
50
18
52
53
54
55
56
57
58
59
60
61
62
63
64
65
66
67
68
69
70
71
72
73
74
75
76
77
78
79
80
81
82
83
84
85
86
87
88
1 2 3 4
89
90
91
92

*** PARTS LIST** **Fig. 19. Fig.20** (Refer to the disassembly diagram : Blue portions in the parts list designate assemblies.)

REF. NO.	PART NO.	DESCRIPTION
1	M3 x 0.5 x 6	Sems screw
2	330-203-001	Upper plate cover
3	286-3350-00	Set plate
4	345-196-000	Rubber cushion
5	285-033-002	Guide label
6	#1-M5 x 0.8	Wing nut
7	#2-5	Spring washer
8	#1-5	Flat washer
9	300-358-000	Mounting bracket
10	330-289-000	Antenna receptacle holder plate
11	314-030-000	Cord holder plate
12	311-053-400	Bottom case
13	347-008-200	Insulating paper
14	303-018-003	Upper case
15	345-161-000	Rubber cap
16	347-007-100	Insulating paper
17	#1-3	Flat washer
18	M3 x 6	Machine screw
19	340-018-000	Spacer
20	370-222-100	Escutchon (2) (MODEL PU-601A-302 use)
21	370-2730-00	Escutcheon (2) MODEL PU-601A-302 use)
22	372-2470-00	Scale plate
23	370-221-100	Escutcheon (1)
24	M2.6 x 6	Tapping screw
25	330-303-000	Shaft retainer
26	341-059-000	Shaft
27	750-061-101	Shaft spring (Left use)
28	750-061-100	Shaft spring (Right use)
29	320-007-100	Dustproof cover
30	371-154-000	Trim plate
31	371-2248-00	Trim plate
32	371-153-000	Trim plate
33	3/8" 142405	Flat washer
34	3/8" 142308	Hex nut
35	380-260-200	Knob (Outer)
36	380-259-100	Knob (Inner)
37	852-316-000	Extension lead
38	M3 x 6	Small countersink screw
39	009-045-000	Choke
40	944-020-001	By-pass capacitor assembly
41	010-082-001	Choke coil
42	M3 x 10	Machine screw
43	2SB367	Power transistor
44		Mylar sheet
45	313-053-100	Heat sink

REF. No.	PART No.	DESCRIPTION
46	746-041-000	Insulated washer
47	B-4	Lug terminal
48	#2-3	Spring washer
49	M3 x 0.5	Hex nut
50	746-003-000	Fiber washer
51	099-307-100	Printed board (Radio section)
52	M3 x 4	Machine screw
53	004-119-000	Trimmer
54	335-025-000	Threaded ring
55	330-199-000	Ring attachment plate
56	330-248-000	Threaded plate
57	931-075-000	Manual tuner (M type)
58	335-031-000	Joint shaft
59	092-033-003	Antenna receptacle
60	330-254-200	Antenna attachment plate
61	M3 x 0.5 x 8	Sems screw
62	330-196-200	Switch plate
63	073-025-002	2P Moulded terminal
64	012-285-000	Variable resistor
65	004-135-000	Antenna trimmer
66	330-195-000	Tuner attachment plate
67	330-198-100	Variable resistor
68	099-306-200	Printed board (Priamp section)
69	099-305-100	Printed board (Mainamp section)
70	M3	Toothed lock washer
71	M3 x 8	Machine screw
72	746-003-000	Fiber washer
73	330-250-100	Printed board attachment fitting
74	330-197-100	Threaded plate
75	012-286-000	Variable resistor
76	309-051-301	Front plate
77	3/8" 142405	Flat washer
78	3/8" 142308	Hex nut
79	# 1	Dial cord
80	3.3 x 2 x 3	Eylet
81	376-051-100	Dial pointer
82	017-013-008	Pilot lamp (Channel .1 use)
83	017-013-001	Pilot lamp (Channel .2 use)
84	017-013-009	Pilot lamp (Channel .3 use)
85	017-013-010	Pilot lamp (Channel .4 use)
86	330-202-000	Pilot lamp holder plate
87	825-009-100	Pilot lamp holder
88	375-030-000	Pilot lamp ornament
89	374-046-000	Back plate
90	825-010-100	Special tube
91	017-015-000	Pilot lamp
92	017-016-003	Pilot lamp

*EXPLODED VIEW (See Parts List) FIGURE. 21.

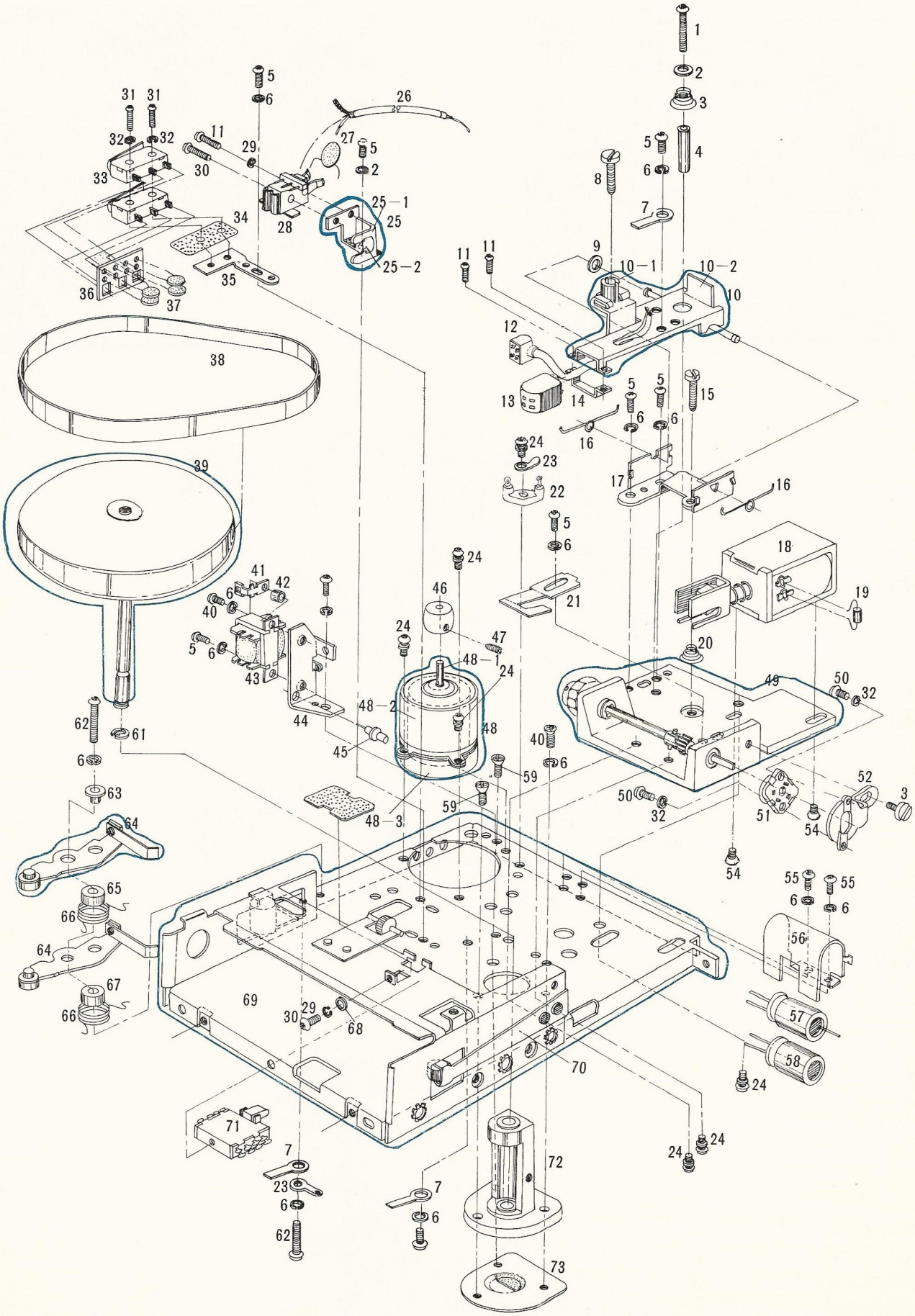

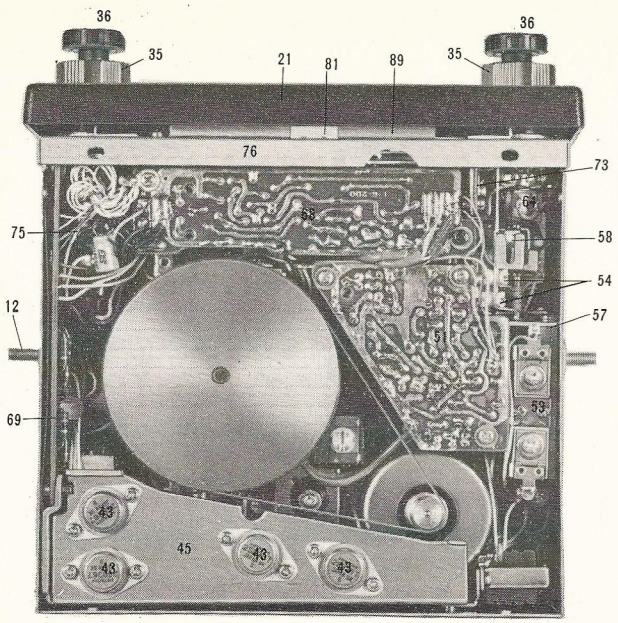
36
35
21
81
89
35
36
76
73
75
58
54
12
57
69
43
45
48
43

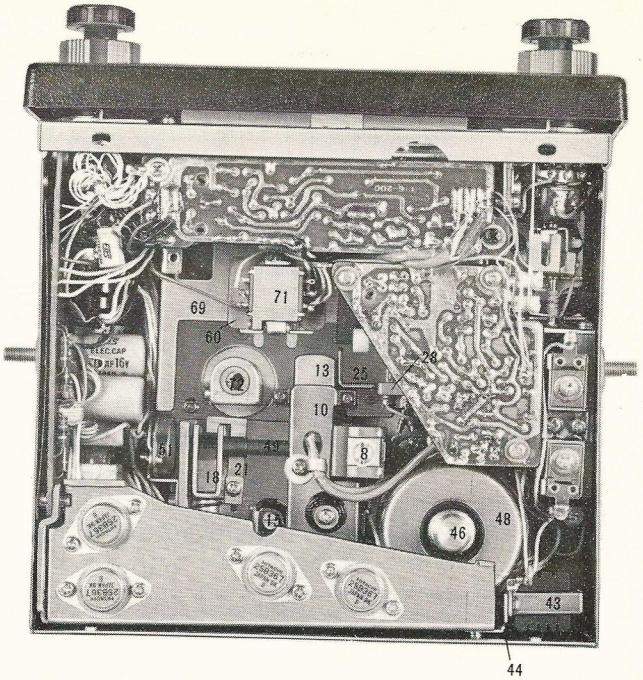
71
69
60
13
25
28
10
8
21
18
48
46
43
44

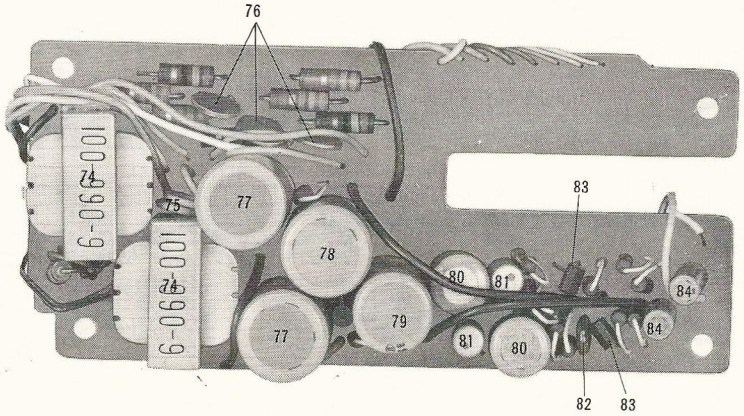
76
6-060-001
74
75
77
78
79
80
81
83
84
82

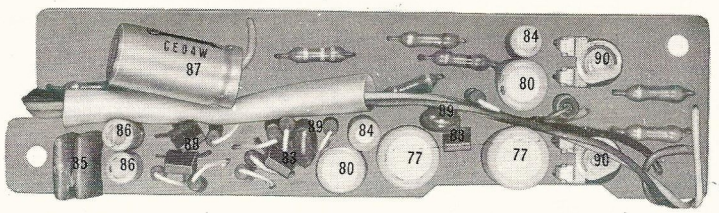
CE04W
87
84
90
80
86
89
83
77
85

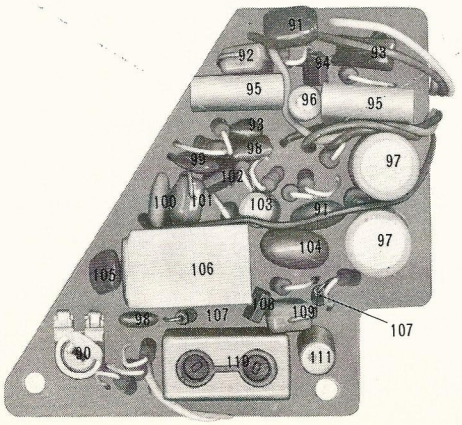
91
92
94
93
95
96
97
99
102
100
101
103
104
106
105
98
107
108
109
110
111

* PARTS LIST: Fig. 21. (Refer to the disassembly diagram : Blue portions in the parts list designate assemblies.)

REF. NO	PART NO.	DESCRIPTION
1	714-3035-11	Machine screw (M3 x 35)
2	740-3000-30	Flat washer (#1-3)
3	750-1186-01	Head lift spring
4	632-0142-01	Screw collar
5	714-3006-11	Machine screw (M3 x 6)
6	741-3000-20	Spring washer (#2-3)
7	321-0743-01	Lead wire holder
8	716-0181-01	Head adjustment screw
9	740-5000-30	Flat washer (#1-5)
10	960-1640-01	Head arm assembly
10-1	631-0043-01	Head adjustment nut
10-2	630-0239-01	Head arm
11	714-2608-10	Machine screw (M2.6 x 8)
12	852-4442-00	Head connecting cord
13	011-0212-00	Reproducing head
14	630-0240-01	Head holder
15	715-3014-61	Machine screw (Flat headed type M3 x 14)
16	750-1231-00	Head arm guide spring
17	630-0238-01	Head stay
18	015-0140-00	Plunger
19	001-0077-00	Diode
20	750-1187-01	Head stay spring
21	750-1169-01	Cam ratchet spring
22	073-0400-00	2P Molded terminal
23	073-0412-00	Lug terminal
24	732-3008-11	Sems screw (M3 x 8)
25	960-2659-00	Tape guide assembly
25-1	605-0021-00	Tape guide
25-2	631-0044-00	Tape guide cap
26	093-0542-00	Relay cable
27	043-0022-00	Porcelain capacitor
28	074-0400-00	Connector pin
29	741-2600-20	Spring washer (#2-2.6)
30	714-2606-10	Machine screw (M2.6 x 6)
31	714-2016-10	Machine screw (M2 x 16)
32	741-2000-20	Spring washer (#2-2)
33	013-2690-00	Micro switch
34	347-0295-00	Switch insulating paper
35	630-0286-00	Micro switch attachment plate
36	099-3293-00	Printed board
37	043-0022-00	Porcelain capacitor
38	602-0005-00	Flat belet
39	611-0014-00	Flywheel
40	714-3010-11	Machine screw (M3 x 10)
41	073-0439-00	1P Terminal
42	340-0328-00	Vinyl tube
43	009-0390-00	Choke transformer
44	630-0244-00	Choke attachment plate
45	040-0080-00	Feed thru capacitor
46	603-0017-00	Pulley
47	718-2630-20	Allen set screw (M2.6 x 3)
48	960-1970-00	Motor assembly

REF. No.	PART No.	DESCRIPTION
48-1	020-018-000	Motor
48-2	630-0291-00	Motor shield case (Upper)
48-3	630-0292-00	Motor shield case (Lower)
49	960-2170-01	Camshaft bearing assembly
50	714-2004-10	Machine screw (M2 x 4)
51	013-2180-00	Rotary switch
52	630-0242-01	Rotary switch attachment fitting
53	630-0126-00	Rotary switch attachment screw
54	714-3006-41	Small countersink screw (M3 x 6)
55	714-3004-11	Machine screw (M3 x 4)
56	321-0747-00	Capacitor holder plate
57	042-0123-00	Electrolytic capacitor (HL15V 900 FY)
58	042-0135-00	Electrolytic capacitor (VL15V 500 FY)
59	714-3008-41	Small countersink screw (M3 x 8)
60	347-0296-00	Switch insulating paper
61	743-5000-00	E ring
62	714-3020-11	Machine screw (M3 x 20)
63	632-0124-00	Sleeve
64	960-2210-00	Switch arm assembly
65	632-0140-00	Sleeve
66	750-1198-00	Sleeve spring
67	632-0141-00	Sleeve
68	740-2600-30	Flat washer (1-2.6)
69	960-1600-02	Chassis assembly
70	960-2627-00	Cartridge roller assembly
71	013-2760-00	Slide switch
72	607-0011-00	Capstan housing
73	630-0373-02	Capstan cover
74	006-066-001	Input transformer
75	0.25Ω	Resistor wire
76	002-014-000	Thermistor
77	VL10V 470μFW	Electrolytic capacitor
78	VL16V 470μFW	Electrolytic capacitor
79	VL16V 330μFW	Electrolytic capacitor
80	VL10V 100μFW	Electrolytic capacitor
81	2SC281EP (B)	Silicon transistor
82	50V 0.005μF±20%	Mylar capacitor
83	2SC458L (C) or (D)	Silicon transistor
84	VL10V 10μFW	Electrolytic capacitor
85	VM390P	Mica capacitor
86	VL16V 4.7μFW	Electrolytic capacitor
87	VL16V 220μFW	Electrolytic capacitor
88	2SC458LG (C) or (D)	Silicon transistor
89	50V 0.033μF±20%	Mylar capacitor
90	012-274-000	Semi-fixed resistor
91	50V 0.04μF±20%	Mylar capacitor
92	180PF	Mica capacitor
93	50V 0.002μF±20%	Mylar capacitor
94	2SC460 (B) or (C)	Silicon transistor
95	50V 0.47μF	ML capacitor
96	VL10V 10μFW	Electrolytic capacitor

REF. NO	PART NO.	DESCRIPTION
97	VL16V 100μFW	Electrolytic capacitor
98	50V 0.01μF±20%	Mylar capacitor
99	50V 0.005μF±20%	Mylar capacitor
100	50V 120μF±20%UJ	Porcelain capacitor (Disc type)
101	150PF	Mica capacitor
102	2SC454 (B)	Silicon transistor
103	VL50V 0.22 FW	Electrolytic capacitor
104	50V 0.1μF±20%	Mylar capacitor
105	50V 0.02μF±20%	Mylar capacitor
106	005-055-000	Intermediate frequency transforer
107	1N34A	Diode
108	2SC460C	Silicon transistor
109	200PF	Mica capacitor
110	005-056-000	Intermediate frequency transformer
111	TR-9S	Fixed voltage diode
	VS50V 4700PF ±10%	Steelroll capacitor
	1/2W 33Ω±10 %	Carbon resistor
	1/2W 15Ω±5 %	Film resistor
	1/2W 250Ω±5 %	Film resistor
	1/2W 1.5KΩ±10%	Film resistor
	1/2W 3.3KΩ±10%	Film resistor
	1/4W 100Ω±10%	Film resistor
	1/4W 1KΩ±10 %	Film resistor
	1/4W 12KΩ±10 %	Film resistor
	1/4W 22KΩ±10%	Film resistor

REF. NO.	PART NO.	DESCRIPTION
	1/4W 68KΩ ±10%	Film resistor
	1/4 220KΩ±10%	Film resistor
	1/4W 2.7KΩ±10%	Film resistor
	1/4W 3.3KΩ ±10%	Film resistor
	1/4W 6.8KΩ±10%	Film resistor
	1/4W 8.2KΩ±10%	Film resistor
	1/4W 150KΩ±10%	Film resistor
	1/4W 56KΩ±10%	Film resistor
	1/4W 4.7KΩ±10%	Film resistor
	1/4W 3.9KΩ±10%	Film resistor
	1/4W 1.2KΩ±10%	Film resistor
	1/4W 1KΩ±10%	Film resistor
	1/4W 120Ω±10 %	Film resistor
	1/4W 6.8KΩ±10%	Film resistor
	1/4W 150KΩELR	Film resistor
	1/4W 100KΩELR	Film resistor
	1/4W 56KΩELR	Film resistor
	1/4W 4.7KΩELR	Film resistor
	1/4W 3.9KΩELR	Film resistor
	1/4W 1.2KΩELR	Film resistor
	1/4W 1KΩELR	Film resistor
	1/4W 200ΩELR	Film resistor
	1/4W 1KΩELR	Film resistor
	1/4W 200ΩELR	Film resistor
	1/4W 100ΩELR	Film resistor
	1/4W 120ΩELR	Film resistor

* PRINTED CIRCUIT BOARD

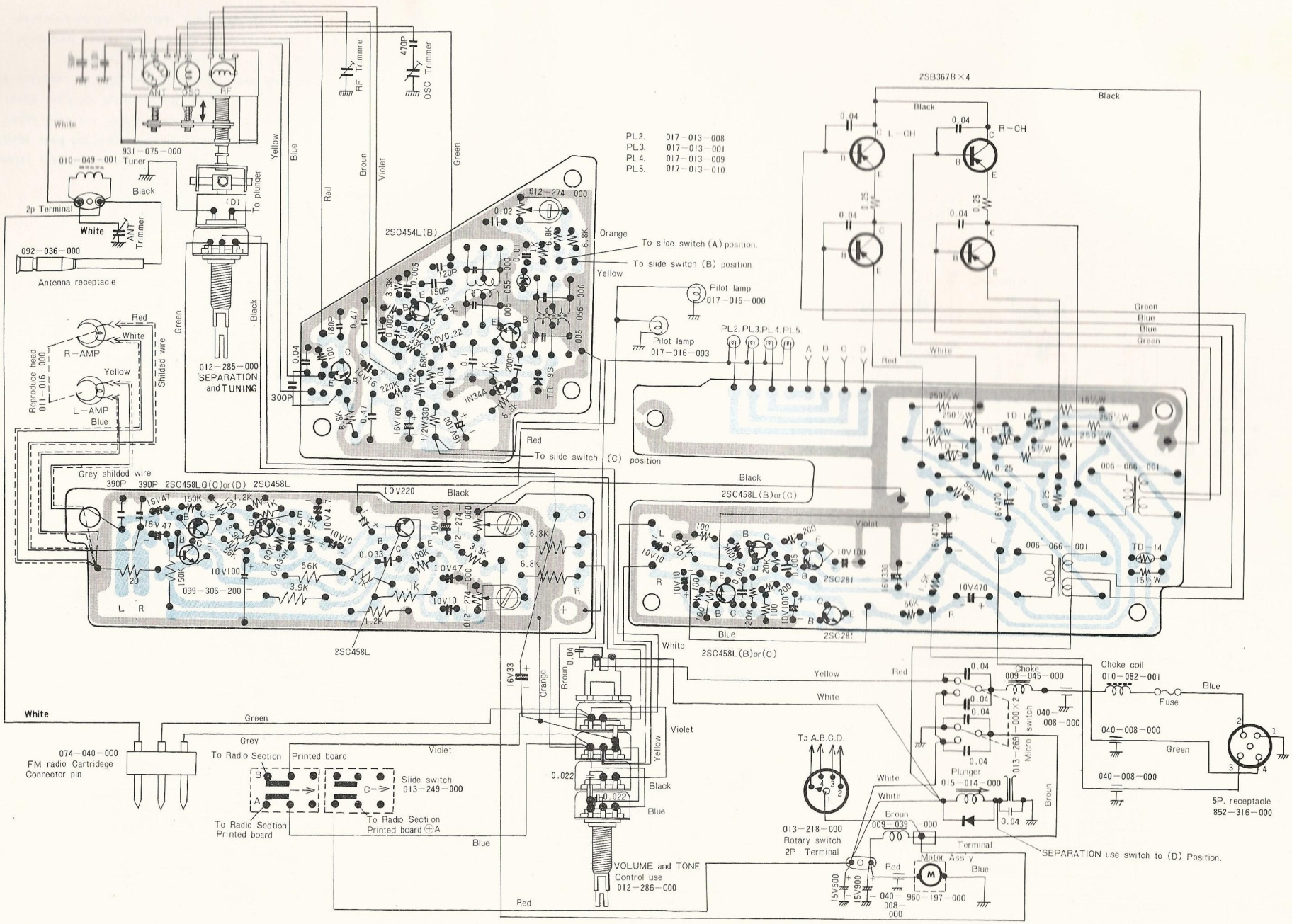

* CIRCUITE DIAGRAM

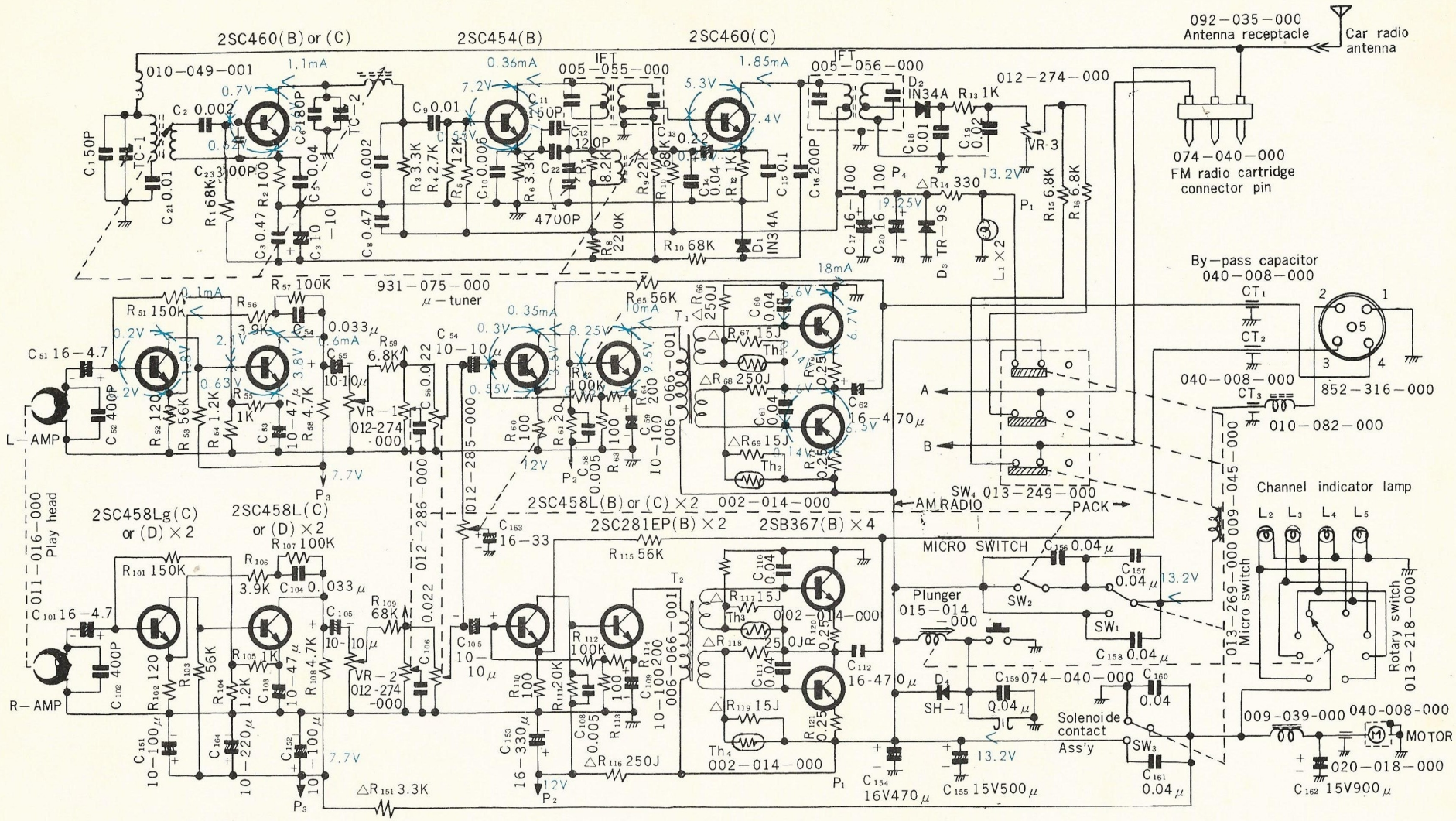

Multimeter used for measurements (4 KΩ/V)

10V range used for measurements grerter than 2.5V

2.5V range used for measurements greater than 0.5V

0.5V range used for measurements below 0.5V

Source voltage: 14 VDC negatively grounded measured without signal present

Note: Measured values may appear different when measured on ranges other than than those speficied.