Clarion Co., Ltd. Export Division—22-3, Shibuya 2-chome, Shibuya-ku, Tokyo, 150 Japan Tel: 03-3400-1121 Fax: 03-3400-8679 Telex: J22908, J22152
Service Dept.—50 Kamitoda, Toda-shi, Saitama, 335 Japan Tel: 0484-43-1111 Telex: J2962628 CLAFAC-J

Clarion Service Manual

Published by Service Administration Section

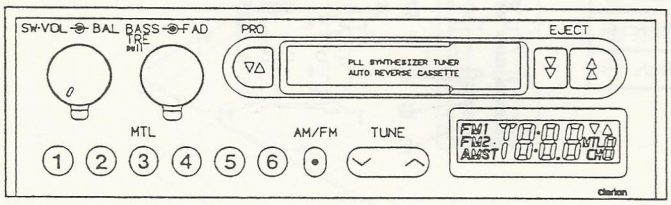

MAZDA Automobile Genuine Radio with Cassette Stereo

Model PT-9614I

(Genuine No. UG05 66 AC0)

■SPECIFICATIONS:

[RADIO SECTION]

Circuit system:	Superheterodyne
Tuning system:	Electronic tuning
Receive range:	AM 531 to 1,602kHz
	FM 87.9 to 107.9MHz
Intermediate frequency:	
	AM 450kHz
	FM 10.7MHz
Quieting sensitivity:	AM Less than 32dB (at 20dB S/N)
	FM Less than 15dB (at 30dB S/N)
Separation:	FM More than 20dB
Auto tuning stop sensitivity:	
	AM DX 29～41dB
	FM DX 22～38dB

[TAPE SECTION]

Reproduction system:	4 track, 2 channel, 2 program stereo cassette deck
Tape speed:	4.76cm/sec.
Wow & flutter:	Less than 0.2% (W.R.M.S)
Separation:	More than 35dB
Crosstalk:	More than 40dB
S/N ratio:	Normal tape (120μS) 46dB
	Metal tape (70μS) 48dB
FF, REW time:	Less than 120sec. (C-60)

[SYNTHESIS]

Load impedance:	4Ω×4
Power output:	3.5W×4 (at 3% THD)
Power supply voltage:	DC 13.2V (10.8V to 15.6V) Negative ground
Current consumption:	Less than 5A (at max. output)
Back up current:	Less than 3mA
Dimensions:	Width 178mm
	Height 50mm
	Depth 160mm
Weight:	1.40kg

■COMPONENT:

● PT-9614I-A

Main unit	1

■REAR VIEW and CONNECTORS:

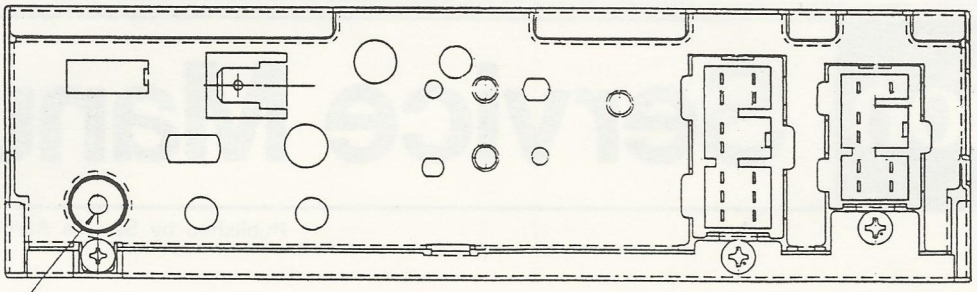

A	Front SP Rch ⊕
B	Front SP Lch ⊕
C	TNS (ILLUMI.)
D	BACK UP
E	ACC
F	Front SP Rch ⊖
G	Front SP Lch ⊖

H	Rear SP Lch ⊕
I	Rear SP Lch ⊖
J	Rear SP Rch ⊕
K	Rear SP Rch ⊖

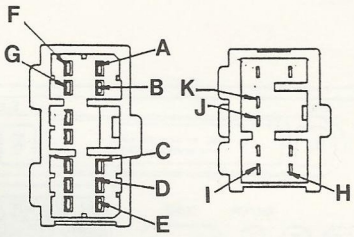

■EXPLANATION OF IC's:

Refer to description in IC service manual vol. 2.			
TA7271P-CL	051-0656-01	19W Power Amp.	P33

Refer to description in IC service manual vol. 3.			
BASS-TRE-MIX	051-0743-00	BASS-TRE-MIX	P21

■M6901L 051-0301-03 Dual Pre Amp

Outward Form

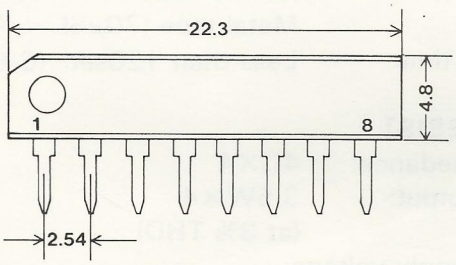

Block Diagram

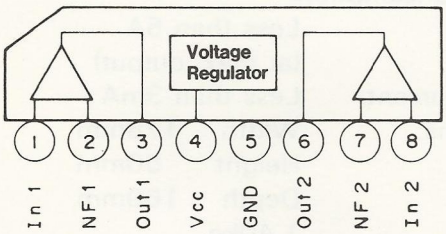

■μPD1719G(A)-926-11 051-1175-02 Tuner Controller

I **Outward Form**

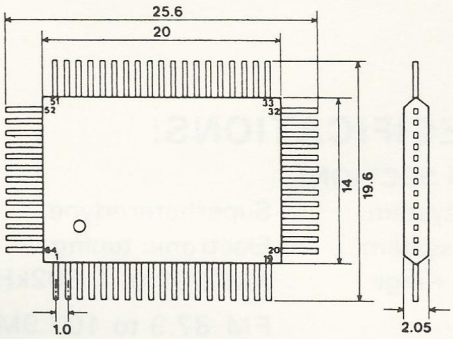

II **Outline**

This IC is a 4-bit 1-chip microcomputer incorporating a prescaler operatable up to 150MHz, PLL frequency synthesizer and LCD driver and this controls FM/AM radio. It has the following functions.

(1) 3-band type with FM1/FM2/AM
(2) Tuning UP/DOWN in AUTO/MANUAL
(3) Preset of 12 stations on FM band
(4) Auto Memory Function
(5) Clock Function

III **Terminal Connection Table**

Pin No.	Symbol	I/O	Function
1	NC	–	Not in use.
2 3	EO1 EO2	O	The charge pump outputs of the phase detectors which consist of PLL. Unlock time allows the output of errors. fr>fosc/N : LOW Level fr<fosc/N : HIGH Level fr=fosc/N : Floating
4	V_{DD}	–	Power supply terminal.
5	AM	I	Input of local oscillation output from 0.6 to 1.5MHz.
6	FM	I	Input of local oscillation output from 15 to 150 MHz.
7	CE	I	Input of select signal for device. Normal operation : H level Unused : L level
8	V_{DD}	–	Power supply terminal.

Pin No.	Symbol	I/O	Function
9	RF-MUTE2 /APS	O	In radio mode: Output of control signal for stopping sensitivity at auto-tuning. Active H level. In tape mode: Every time APS Key is pressed, output is inverted. H level at APS.
10	REM OUT	O	Signal output for last-precedent system. External devices stop at H level.
11	M-ANT	O	Signal output for motor ANT control. UP at H level and DOWN at L level.
12	MTL	I	Signal input terminal for MTL. H level at MTL.
13	$\overline{\text{REM-IN}}$	I	Signal input for last-precedent system. External devices enable at L level.
14	$\overline{\text{ST}}$	I	At L level input, ST indication is lit.
15	RT	I	Radio/Tape mode select signal input. Radio mode : H level Tape mode : L level
16	AMIF	I	Input terminal of intermediate frequency for AM.
17	FMIF	I	Input terminal of intermediate frequency for FM.
18	FR/SD	I/O	In radio mode: SD signal input. Active H level. In tape mode: When RADIO SW SEL is initialized as "1", input port is available for tape-running display. Hi : FWD (△) Lo : REV (▽)
			Outputs H level when RPT indication is lit.
19	XME-LO	O	Outputs H level during auto-tuning and L level on reception.
20	$\overline{\text{FF}}$	O	Outputs L level for approx. 1 sec. when FF key is pressed.
21	$\overline{\text{PLAY/PRO}}$	O	Outputs L level for approx. 1 sec. when PLAY/PRO key is pressed.
22	$\overline{\text{STOP/EJECT}}$	O	Outputs L level for approx. 1 sec. when STOP/EJECT key is pressed.
23	$\overline{\text{REW}}$	O	Outputs L level for approx. 1 sec. when REW key is pressed.
24 25	XO XI	–	This is a connection terminal for a crystal oscillator. Connect a 4.5MHz crystal to it.
26	GND	–	Ground terminal.
27	CGP	O	CGP (Clock Generator Port) terminal.
28	RADIO ON	O	Radio ON/OFF control signal output. Active H level.
29	AF MUTE	O	Muting signal output to erase popping noise at PLL unlocking and at mode selection. Active H level.
30	RF MUTE1	O	Output of control signal for stopping sensitivity at auto-tuning. Active H level.
31	AM/FM	O	In radio mode: Output for tuner band switching. H level at FM and L level at AM. In tape mode: Output of Dolby function control. Active H level.
32 \ 39 48 \ 50	LCD23 \ LCD16 LCD7 \ LCD5	O	Segment signal output terminal to the LCD panel.
40 \ 47 51 \ 55	LCD15/KS15 \ LCD8/KS8 LCD4/KS4 \ LCD0/KS0	O	Terminal which outputs segment signal to the LCD panel and key matrix signal.
56 57	COM1 COM2	O	Common signal output terminal to the LCD panel.
58	GND	–	Ground terminal.
59 \ 62	K3 \ K0	I	Key return signal terminals for key matrix.
63	AD	I	A/D converter input.
64	GND	–	Ground terminal.

Ⅳ Key Matrix

§ 1. Key Matrix Connection Table

Key Out \ Key In	K3 (Pin 59)	K2 (Pin 60)	K1 (Pin 61)	K0 (Pin 62)
KS0 (Pin 55)	FM BAND	M3 SEL	AREA2	AREA1
KS1 (Pin 54)	———	AM-5K	CLK SEL	MUTE SEL
KS2 (Pin 53)	———	RADIO/ COMBI	IF-C	RAD SW SEL
KS3 (Pin 52)	———	TAPE SEL	MTL SEL	———
KS4 (Pin 51)	REW	FF	REV	FWD
KS8 (Pin 47)	MU (M-ADJ)	MD (H-ADJ)	0-ADJ	DISP
KS9 (Pin 46)	SEEK UP	SEEK DN	SCAN UP	SCAN DN
KS10 (Pin 45)	RADIO ON/OFF	SCAN/ DOLBY	MAD (H-ADJ)	MAU (M-ADJ)
KS11 (Pin 44)	XME	FM/AM	M6	M5
KS12 (Pin 43)	M4	M3	M2	M1
KS13 (Pin 42)	TI	MTL	DOLBY	APC
KS14 (Pin 41)	PLAY/PRO	REW	FF	STOP/EJECT

Momentary SW Diode SW Alternate (Transistor) SW

(Note) Some of the sets equipped with this microcomputer are not provided with all the above keys.

§ 2. Diode SW

(Note) In the following table, "0" denotes the diode switch being turned off (open), and "1" it being on (short-circuit).

Symbol	Functions
FM BAND	A switch to set the number of bands for FM. 1 : 1 band 0 : 2 band
AREA1 AREA2	These switches are used for setting a destination.

AREA1	AREA2	Region
1	1	EXP-I
0	1	JAPAN
1	0	EXP-II
0	0	USA

Symbol	Functions
AM-5K	A switch to set the step of AM for USA specification. 1 : channel space 5kHz 0 : channel space 10kHz
CLK SEL	Switch for setting with or without clock function. 1 : with clock 0 : without clock
IF-C	A switch to set station detecting method at auto-tuning. 1 : Uses SD terminal only 0 : Uses both SD and IF terminals.
RADIO/COMBI	A switch to set RADIO only or combination of RADIO and TAPE. 1 : COMBI 0 : RADIO
MUTE SEL	AF MUTE output when tape program change is set as follows. 1 : Output available 0 : Output not available
RADIO SW SEL	A switch to select a method of POWER ON/OFF 1 : RADIO ON/OFF switch disabled 0 : RADIO ON/OFF switch enabled
TAPE SEL	A switch to set existence of failure display at tape mode. 1 : Failure display disabled 0 : Failure display enabled
MTL SEL	A switch to set AUTO MTL. 1 : Momentary method 0 : AUTO MTL
M3 SEL	M3 and MTL keys are set with double functions as follows. 1 : M3/MTL 0 : M3 ※When "1" is selected, MTL SEL is driven to change into momentary position.

§ 3. Alternate (Transistor) SW

Symbol	Functions
REW FF REV FWD	Switches to detect PLAY and FF status at tape mode.

Status	SW name			
	REW	FF	REV	FWD
FWD	OFF	OFF	OFF	ON
REV	OFF	OFF	ON	OFF
FWD FF	OFF	ON	OFF	ON
FWD REW	ON	OFF	OFF	ON
REV FF	OFF	ON	ON	OFF
REV REW	ON	OFF	ON	OFF

§ 4. Momentary SW

Symbol	Functions
DISP	A changeover switch for frequency display/tape display/clock display. Pressed together with MAD (MD) switch : HOUR adjustment Pressed together with MAU (MU) switch : MINUTE adjustment
0-ADJ	A switch for adjusting to time tone.
MU MD	Switches for manual tuning and clock adjustment.
MAU MAD	Switches for auto-tuning (manual operation if pressed within 0.5 second) and clock adjustment.
SCAN UP SCAN DN	Switches to perform auto-tuning in SCAN mode.
SEEK UP SEEK DN	Switches to perform auto-tuning in SEEK mode.
XME	A switch for auto preset memory.
RADIO ON/OFF	Radio ON/OFF SW.
SCAN/DOLBY	SCAN UP switch in radio mode and Dolby ON/OFF switch in tape mode.
FM/AM	Band select SW.
M1 \ M6	Switches for calling and writing of preset memory. o Calling: Release the switch within 1.5 second. o Writing: Keep pressed the switch longer than 1.5 second.
TI	A switch to receive traffic information in Japan. AM 1,620kHz is called when this switch is pressed.
PLAY/PRO, STOP/EJECT, FF, REW, APC, MTL, DOLBY	Switches to control each function in tape mode.

■EXPLODED VIEW • PARTS LIST:

◎Main section

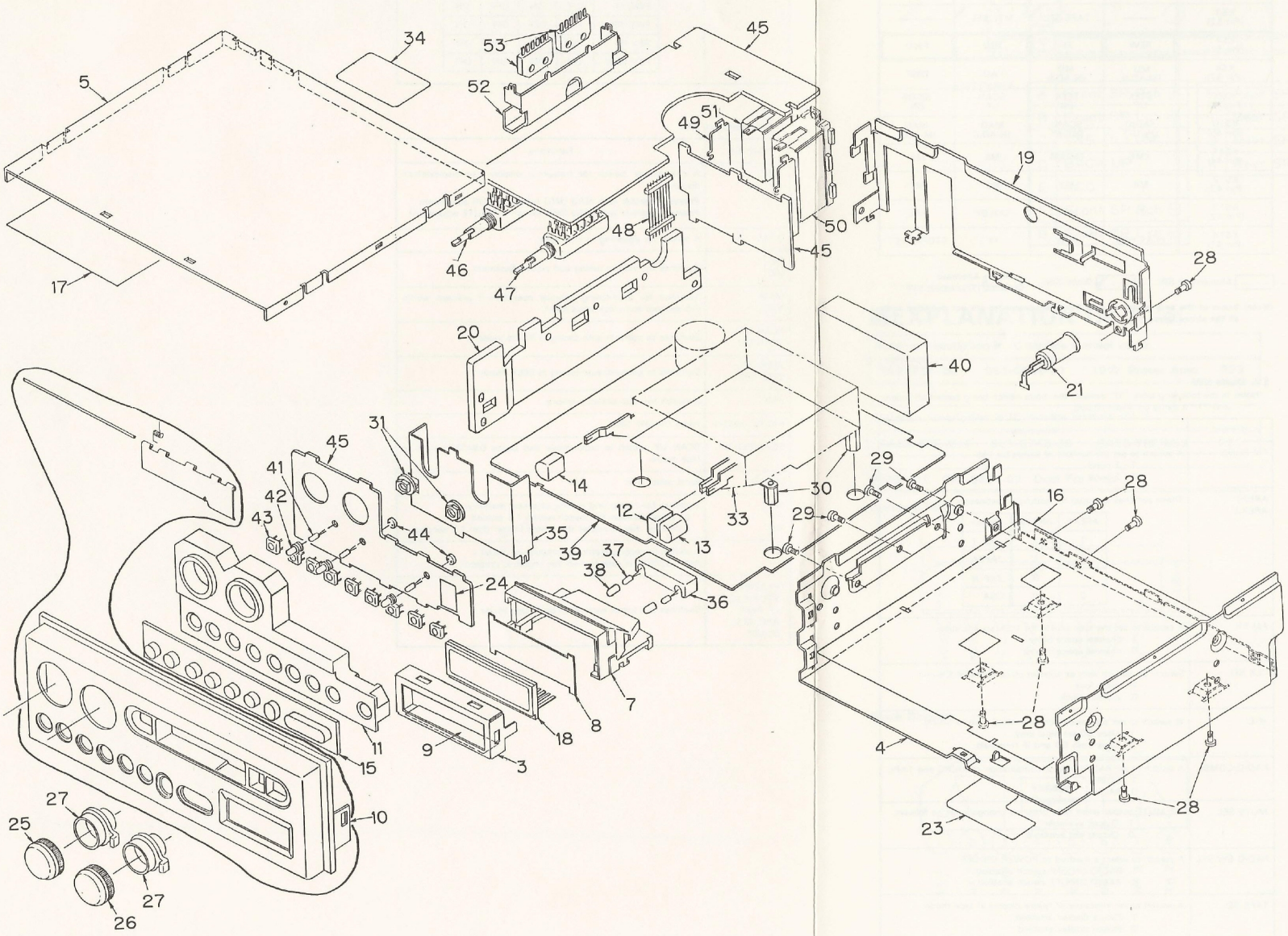

NO.	PART NO.	DESCRIPTION	QTY
3	330-9307-00	EARTH PLATE *LCD	1
4	311-1423-04	LOWER CASE	1
5	310-1410-01	UPPER CASE	1
7	335-3303-00	LCD HOLDER	1
8	335-3302-00	REFLECTOR	1
9	347-3062-00	INSULATOR *EARTHPLATE	1
10	940-1392A	ESCUTCHEON ASSY	1
11	335-3284-01	REFLECTOR	1
13	382-2124-01	BUTTON *FF	1
12	382-2123-01	BUTTON *REW	1
14	382-2122-01	BUTTON *PRO	1
15	345-5048-00	KEY RUBBER	1
16	347-3064-00	INSULATOR *LOWER	1
17	347-3063-01	INSULATOR	1
18	379-0277-00	INDICATOR *LCD	1
19	307-0435-05	REAR COVER	1
20	313-1406-00	HEAT SINK	1
21	092-0628-00	ANT-RECEPTACLE	1
23	347-2342-00	LABEL *LOWER	1
24	347-1063-00	SHADE	1
25	380-5122-00	KNOB *SW-VOL	1
26	380-5123-00	KNOB *B/T	1
27	380-5124-00	KNOB *BAL/FAD	2
28	714-3005-81	MACHINE SCREW	7
29	714-3010-81	MACHINE SCREW	4
30	716-0747-00	SCREW	4
31	722-0519-00	VR-NUT	2
33	930-0576-80	TAPE-MECHANISM	1
34	286-7689-00	SETPLATE	1
35	330-9305-00	SPACE PLATE *VR	1
36	345-5066-00	LAMP HOLDER	1
37	017-0397-00	PILOTLAMP *8V 60M	2
38	345-4441-22	PL CAP	2
39	099-9481-00	MAIN PWB	1
40	880-1911D	AM/FM BLOCK ASSY	1
41	017-0396-00	PILOTLAMP	3
42	345-3436-09	PL CAP	3
43	013-3694-00	SWITCH	9
44	345-3633-00	SPACER	2
45	099-8878-01	PWB	1
46	012-4932-00	VARIABLE-R *SW-VOL	1
47	012-4912-00	VARIABLE-R *B/T FAD	1
48	076-0376-09	PLUG *9P	1
49	330-9306-04	FIX PLATE	1
50	074-0877-11	OUTLET SOCKET	1
51	074-0886-00	OUTLET SOCKET *8P	1
52	330-8353-00	IC-HOLDER	1
53	051-0656-01	IC *TA7271P	2

■PARTS LIST:

◎Electrical section

◎MAIN P.W.B

REF NO.	PART NO.	DESCRIPTION	QTY
D501	001-0188-01	DIODE 1S1885A	1
D402-412 414,504 505,511	001-0330-00 001-0294-00 001-0352-00	DIODE 1SS119 1SS133 1SS176	15
D503	001-0376-32 001-0377-32 001-0400-32	DIODE MTZ5.6JB MA4056M HZS5.6JB2	1
D101,301 401,509	001-0376-48 001-0377-47 001-0400-47	DIODE MTZ9.1JC MA4091M HZS9.1JB2	4
D508,510	001-0376-49 001-0377-48 001-0400-48	DIODE MTZ10JA MA4091H HZS9.1JB3	2
D502,506	001-0360-00	DIODE S5566B	2
TH301	002-0206-01	THERMISTOR	1
L501	009-0621-02	CHOKE	1
L301	010-2003-03	COIL	1
C101,201	043-0242-00	FILM-C 0.001μF	2
IC2	051-0301-03	IC M6901L	1
IC1	051-1175-02	IC μPD1719G(A)-926	1
SUP301	060-0122-10	SURGE PROTECTOR	1
X401	061-1064-00	CRYSTAL	1
Q401-406 501-503	102-2458-49	TRANSISTOR 2SC2458	9
Q101,201	102-3400-00	TRANSISTOR 2SC3400	2
Q507,508	102-3402-00	TRANSISTOR 2SC3402	2
Q302,504 505,506	103-1858-50	TRANSISTOR 2SD1858	4
R512	111-2291-81	FILM-R 1/2W2.2Ω	1
R509,521	111-4701-81	FILM-R 1/2W47Ω	2

REF NO.	PART NO.	DESCRIPTION	QTY
C302,313 403,405 409,412 414,480	171-1032-06	CERAMIC-C 0.01μF	8
C404	171-2232-06	CERAMIC-C 0.022μF	1
C308	171-3322-06	CERAMIC-C 3300PF	1
C103,104 203,204 301,312	171-3332-06	CERAMIC-C 0.033μF	6
C504	173-1042-10	POLYESTOR-C 0.1μF	1
C407,408	174-2207-13	CERAMIC-C 22PFCH	2
C399	174-5097-13	CERAMIC-C 5PFCH	1
C311	179-1053-62	ELECTRO-C 50V1μF	1
C503,508	179-1063-32	ELECTRO-C 16V10μF	2
C307,506 507	179-1073-22	ELECTRO-C 10V100μF	3
C505	179-1073-32	ELECTRO-C 16V100μF	1
C303	179-1083-23	ELECTRO-C 10V1000μF	1
C501	179-3363-32	ELECTRO-C 16V33μF	1
C305,306	182-1043-62	ELECTRO-C 50V0.1μF	2
C106,206 410	183-1073-12	ELECTRO-C 6.3V100μF	3
C102,108 202	183-2253-62	ELECTRO-C 50V2.2μF	3
C402	183-2256-68	ELECTRO-C 50V2.2μFNP	1
C105,205 502	183-4743-62	ELECTRO-C 50V0.47μF	3
C107,109 401	183-6863-22	ELECTRO-C 10V68μF	3

◎AUDIO P.W.B

REF NO.	PART NO.	DESCRIPTION	QTY
C161,170	042-0348-00	ELECTRO-C 16V2200μF	2
C160,169 260,269	042-0356-00	ELECTRO-C 10V1000μF	4
IC4,5	051-0656-01	IC TA7271P	2
IC3	051-0743-00 051-0743-70	IC BASS-TRE MIX	1
Q151,251	103-1504-05	TRANSISTOR 2SD1504E	2
C155,164 255,264	160-1022-05	CERAMIC-C 1000PFB	4
C162,171	173-1042-10	POLYESTOR-C 0.1μF	2
C158,167 258,267	173-2242-10	POLYESTOR-C 0.22μF	4

REF NO.	PART NO.	DESCRIPTION	QTY
C157,159 166,168 259,268	179-1073-22	ELECTRO-C 10V100μF	6
C509	179-1073-32	ELECTRO-C 16V100μF	1
C151-154 251-254	179-2253-62	ELECTRO-C 50V2.2μF	8
C156,165 256,265	182-1073-02	ELECTRO-C 4V100μF	4
C163,263	182-2253-62	ELECTRO-C 50V2.2μF	2

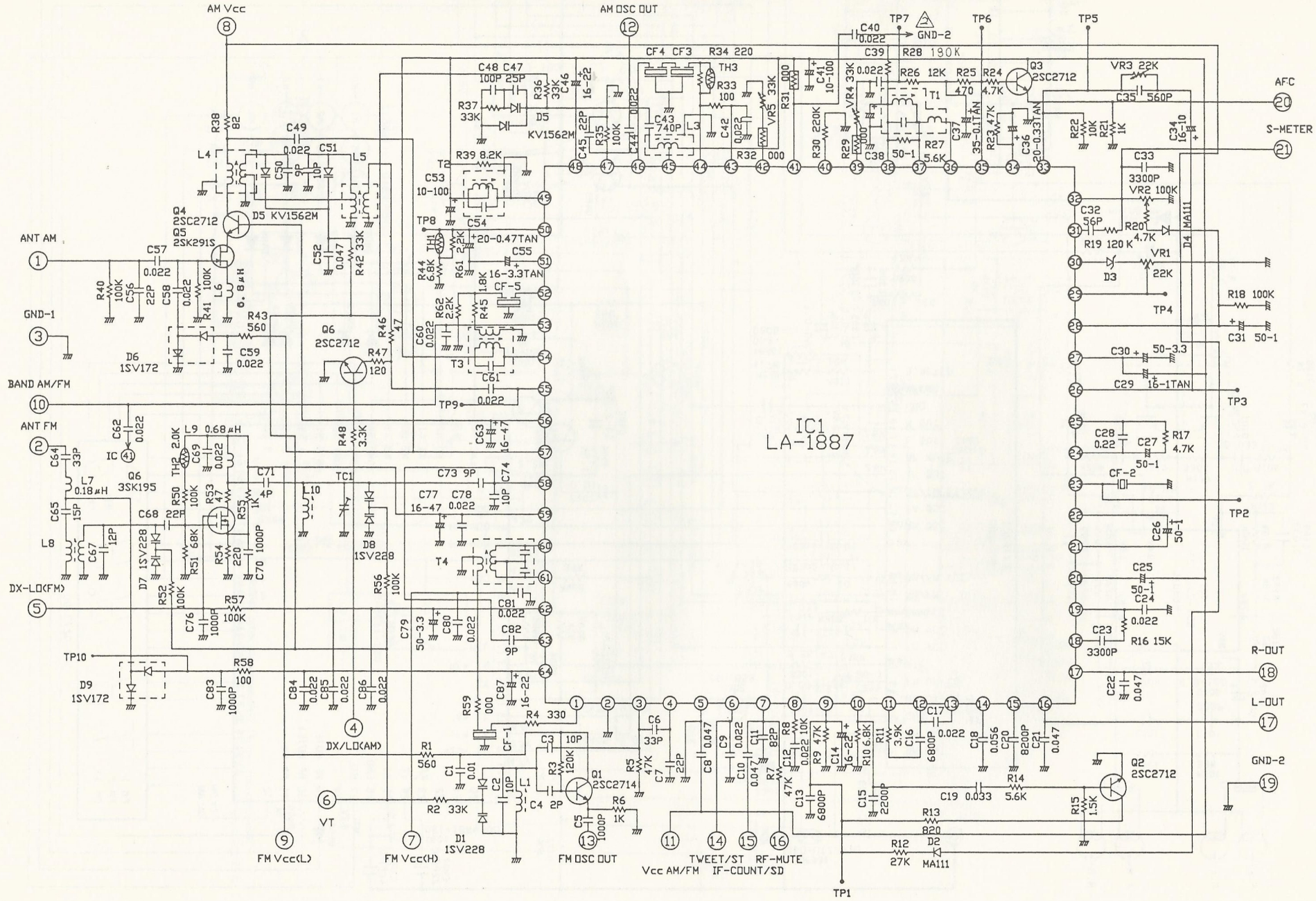
AM Vcc
AM OSC OUT
TP7
GND-2
TP6
TP5
AFC
S-METER
ANT AM
GND-1
BAND AM/FM
ANT FM
DX-LO(FM)
TP10
DX/LO(AM)
VT
FM Vcc(L)
FM Vcc(H)
FM OSC OUT
Vcc AM/FM
TWEET/ST
IF-COUNT/SD
RF-MUTE
TP1
R-OUT
L-OUT
GND-2
IC1
LA-1887
Q1 2SC2714
Q2 2SC2712
Q3 2SC2712
Q4 2SC2712
Q5 2SK291S
Q6 2SC2712
Q6 3SK195
D1 1SV228
D2 MA111
D3
D4 MA111
D5 KV1562M
D6 1SV172
D7 1SV228
D8 1SV228
D9 1SV172
TP1
TP2
TP3
TP4
TP8
TP9

■CIRCUIT DIAGRAM:

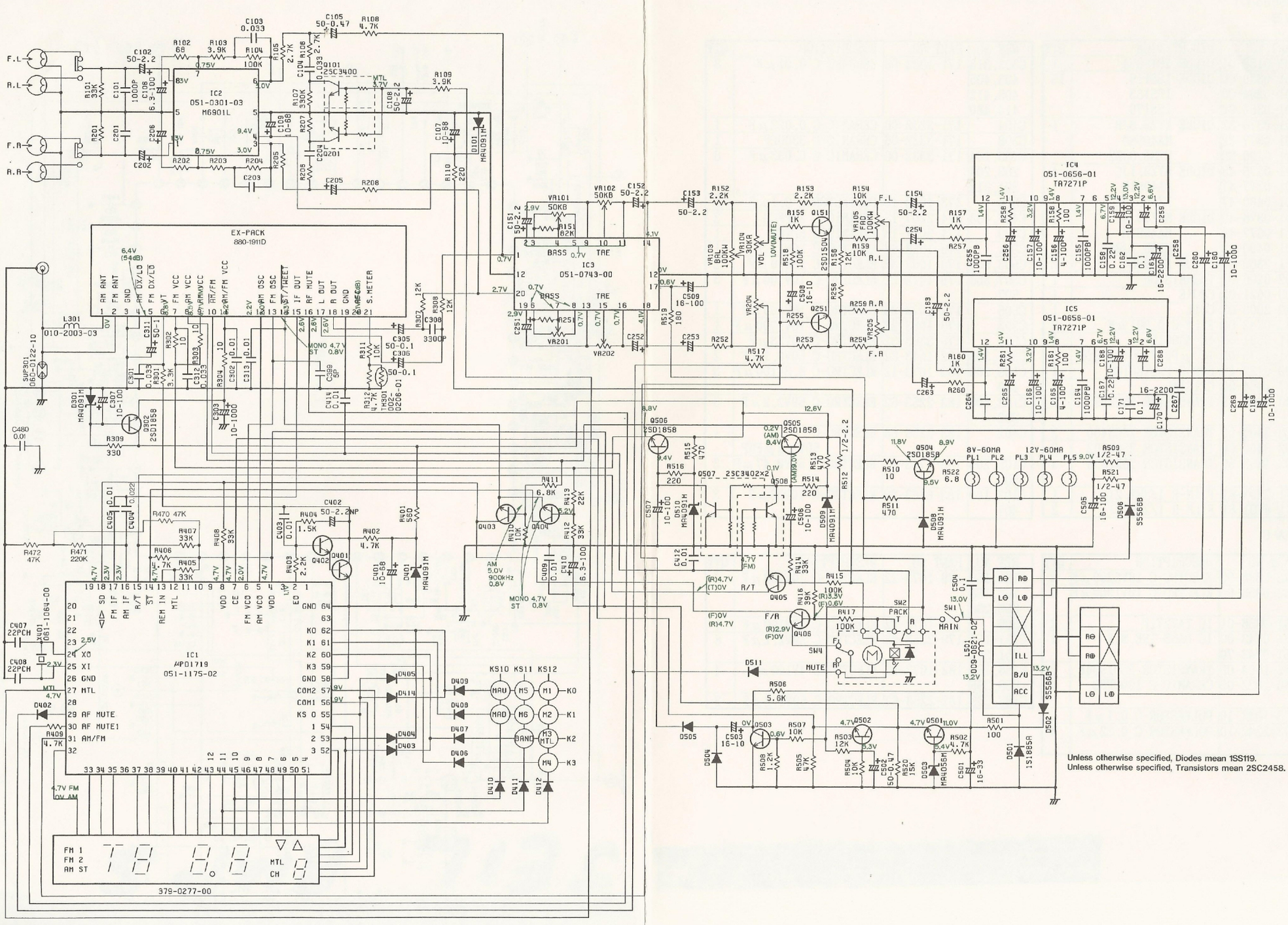

■PRINTED WIRING BOARD:

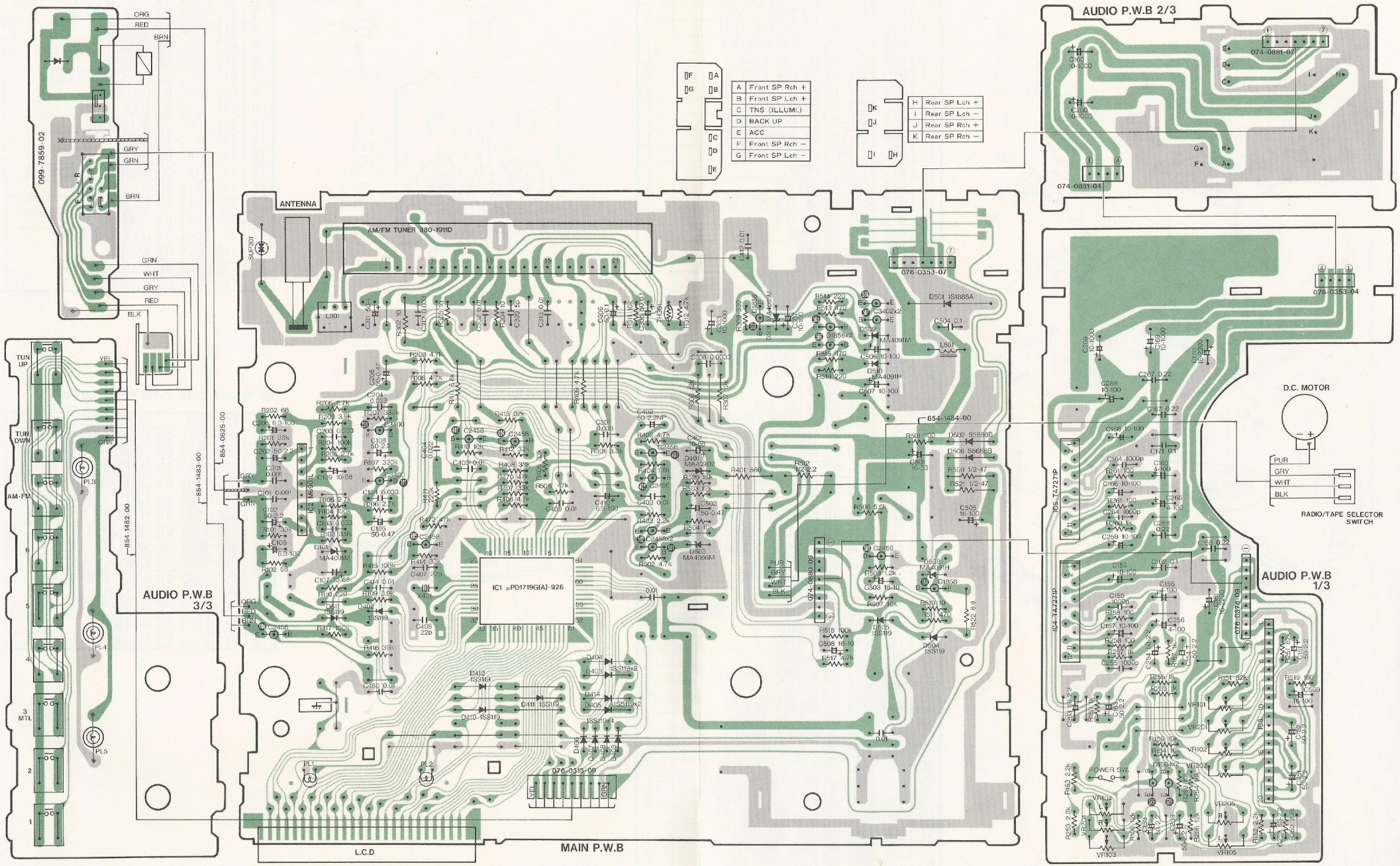

■EXPLODED VIEW • PARTS LIST:

◎Tape mechanism section 930-0576-80

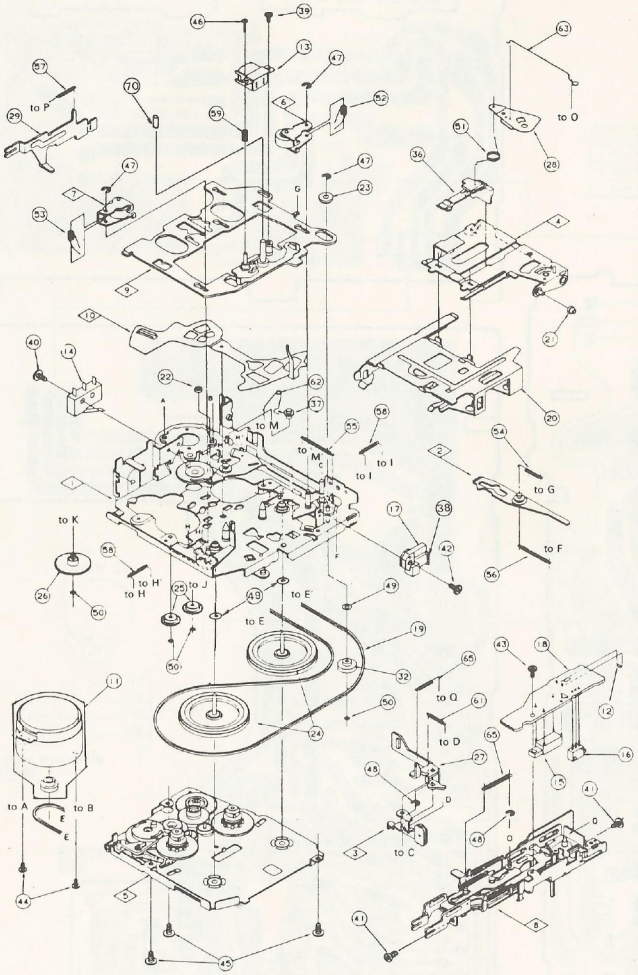

NO.	PART NO.	DESCRIPTION	QTY
1	960-3834-04	DECK P ASSY R	1
2	960-3837-04	SHIFT-P-ASSY	1
3	960-3839-03	PLUNGER-L-ASSY	1
4	960-3840-02	GUIDE ARM ASSY	1
5	960-4205-04	BOTTOM-SUB-A-C	1
6	960-4230-00	ROLLER ASSY F	1
7	960-4231-00	ROLLER ASSY R	1
8	960-3924-13	FRAME SUB A RS	1
9	960-4222-00	HEAD P ASSY R	1
10	960-3881-05	CH PLATE ASSY	1
11	SMA-121-100	DC-MOTOR ASSY	1
12	001-0330-00	DIODE 1SS119	1
13	011-0313-00	HEAD	1
14	013-2690-02	SWITCH	1
15	013-3807-00	SWITCH *SLIDE	1
16	013-3808-10	SWITCH	1
17	630-1479-02	CORE	1
18	099-7859-02	PWB	1
19	602-0103-10	BELT	1
20	606-0083-09	PACK GUIDE	1
21	610-0226-01	GUIDE-A-ROLLER	1
22	610-0293-01	POWER ROLLER	1
23	610-0294-01	HEAD-P-G-ROLLER	1
24	611-0077-01	FLYWHEEL	2
25	613-0095-01	FF IDLER GEAR	2
26	613-0087-10	GEAR A	1
27	630-1930-02	OFF ARM	1
28	630-1932-02	SWING ARM	1
29	630-1934-02	PROGRAM LEVER	1
32	604-0035-01	TENSION PULLEY	1
36	631-0552-03	PACK STOPPER	1
37	632-1886-02	LOCK PIN	1
38	960-3392-02	COIL-ASSY	1
39	716-0816-00	STEEL SCREW	1
40	714-2308-81	MACHINE SCREW *SW	1
41	714-2604-81	MACHINE SCREW *FRAME	2
42	714-2606-11	MACHINE SCREW *PLUNG	1
43	716-0790-02	PWB SCREW	1
44	716-0715-15	STEEL SCREW	2
45	716-0717-10	STEEL SCREW	3
46	716-0429-00	SCREW *AZIMUTH	1
47	743-1500-20	E-RING	3
48	743-2000-20	E-RING	2
49	746-0624-00	WASHER	3
50	746-0761-00	WASHER *3.2X1.6	4
51	750-2361-01	SPRING	1
52	750-2929-00	ROLLER SPRING F	1
53	750-2928-00	ROLLER SPRING R	1
54	750-2537-02	OVER-P-SPRING	1
55	750-2538-01	POWER-P-SPRING	1
56	750-2539-01	SHIFT-P-SPRING	1
57	750-2541-02	PROGRAME SPRING	1
58	750-2545-00	FF GEAR SPRING	2
59	750-1910-00	SPRING *AZIMUTH	1
61	750-2555-02	OFF ARM SPRING	1
62	750-2568-00	LOCK SPRING	1
63	750-2569-03	EJECT ROD RS	1
65	750-2554-03	CLICK-P-SPRING	1
70	631-0545-01	EJECT ROLLER	1

<BOTTOM SUB Ass'y-C (960-4205-04)>

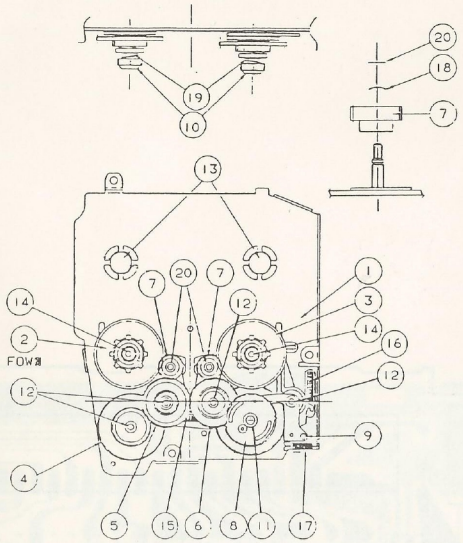

◎BOTTOM SUB Ass'y-C (960-4205-04)

NO.	PART NO.	DESCRIPTION	QTY
1	960-4206-02	BOTTOM ASSY C	1
2	960-3854-04	REEL ASSY F	1
3	960-3855-06	REEL ASSY R	1
4	613-0088-01	GEAR B	1
5	613-0089-02	GEAR F	1
6	613-0090-02	GEAR R	1
7	613-0091-02	PLAY IDLER GEAR	2
8	613-0093-03	CH GEAR	1
9	631-0546-02	LOCK LINK	1
10	631-1967-00	SLIDE BUSH	2
11	716-0716-10	SCREW	1
12	746-0761-00	WASHER	4
13	746-0767-00	WASHER *FLYWHEEL	2
14	746-0813-00	POLY-WASHER	2
15	750-2542-00	IDLER SPRING	1
16	750-2543-01	SENSING SPRING	1
17	750-2544-03	LOCK-L-SPRING	1
18	745-0678-03	WASHER	2
19	750-2564-01	SLIDE-SPRING	2
20	746-0797-00	WASHER	2

<FRAME SUB-A-RS (960-3924-13)>

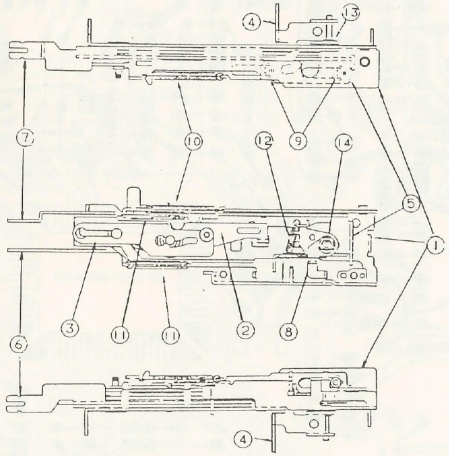

◎FRAME SUB-A-RS (960-3924-13)

NO.	PART NO.	DESCRIPTION	QTY
1	960-3841-04	FRAME ASSY RMS	1
2	960-3887-03	SELECT-P-ASSY-S	1
3	960-3845-03	CLICK-P-ASSY	1
4	630-1931-03	LOCK ARM	1
5	630-1938-03	EJECT PLATE RS	1
6	630-1943-07	FF LEVER R	1
7	630-1948-07	REW LEVER R	1
8	960-4058-04	SW PLATE ASSY	1
9	610-0296-01	EJECT-P-ROLLER	2
10	750-2549-01	EJECT SPRING R	1
11	750-2550-02	FF SPRING C	2
12	750-2556-01	SW PLATE SPRING	1
13	743-1500-20	E-RING	1
14	743-1500-20	E-RING	1

Printed in Japan 298-4493-00 SEP. 1991 ©