Clarion Co., Ltd. Export Division—22-3, Shibuya 2-chome, Shibuya-ku, Tokyo, 150 Japan Tel: 03-400-1121 Fax: 03-400-8679 Telex: J22908, J22152
Service Dept.—50 Kamitoda, Toda-shi, Saitama, 335 Japan Tel: 0484-43-1111 Telex: J2962628 CLAFAC-J

clarion Service Manual

Published by Service Administration Section

MAZDA Automobile Genuine Radio with Cassette Stereo

Model PT-9337C-A•B

(Genuin No. C-A FC52 66 ACO / C-B FC52 66 ACO A)

1989 RX-7

■SPECIFICATIONS:

[RADIO SECTION]

Circuit system:	Superheterodyne	
Tuning system:	Electronic tuning	
Receive range:	AM	531 to 1,602kHz
	FM	87.9 to 107.9MHz
Intermediate frequency:		
	AM	450kHz
	FM	10.7MHz
Quieting sensitivity:	AM	Less than 32dB (at 20dB S/N)
	FM	Less than 15dB (at 30dB S/N)
Selectivity:	AM	More than 45dB (at ±10kHz detune)
Separation:	FM	More than 20dB
Fidelity: (Equalizer=flat)	AM 100Hz	−3.5±3dB
	400Hz	0dB
	4kHz	−15±5dB
	FM 100Hz	−1.5±3dB
	400Hz	0dB
	7kHz	−12±6dB
Auto tuning stop sensitivity:		
	AM DX	30~40dB
	FM DX	25~35dB

[TAPE SECTION]

Reproduction system:	4 track, 2 channel, 2 program stereo cassette deck
Tape speed:	4.76cm/sec.
Wow & flutter:	Less than 0.2% (W.R.M.S)
Separation:	More than 35dB
Crosstalk:	More than 35dB
S/N ratio:	Normal tape (120μS) 46dB/54dB (Dolby NR on) Metal tape (70μS) 50dB/58dB (Dolby NR on)
FF, REW time:	Less than 120sec. (C-60)

[SYNTHESIS]

Load impedance:	4Ω×4
Power output:	3W×4 (at 3% distortion)
Power supply voltage:	DC 13.2V (10.8V to 15.6V) Negative ground
Current consumption:	Less than 7.5A (at max. output)
Back up current:	Less than 3mA
Dimensions:	Width 180mm, Height 70mm, Depth 160mm
Weight:	2kg

- Dolby and the double-D symbol are trademarks of Dolby Laboratories Licensing Corporation.
- Dolby Noise Reduction System manufactured under license from Dolby Laboratories Licensing Corporation.

■FEATURES:

1. 1way diversity radio with full-logic cassette player.
2. Dolby-B noise reduction.
3. 930-0590-00 (SF-X mechanism).
4. AM Tuner pack (880-1513T).
   FM Tuner pack (880-1417A).
5. SYSTEM EXAMPLE.

1. AUDIO SYSTM

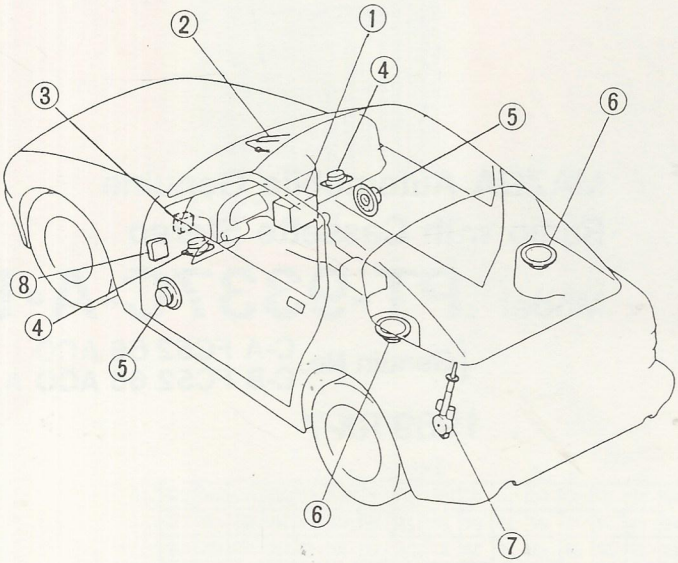

1. Audio component assembly
2. Windshield antenna
3. Door woofer amplifier (Without Passive belt)
4. Front speakers
5. Door woofer speakers
6. Rear speakers
7. Power antenna
8. Door woofer amplifier (With Passive belt)

2. TYPE 1

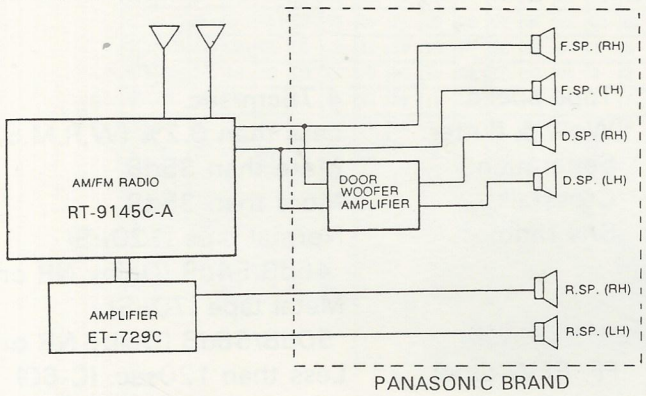

3. TYPE 2,3

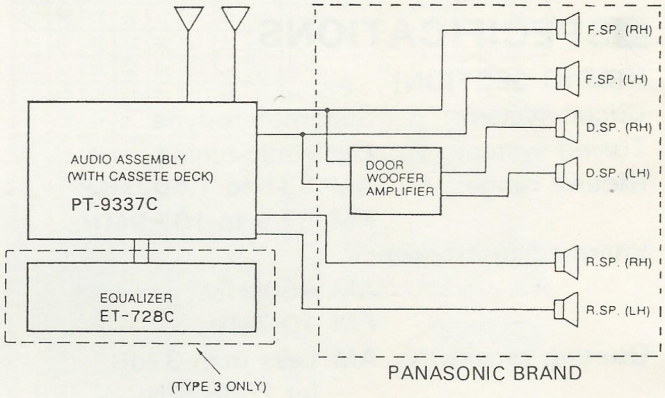

■COMPONENT:

Main unit 1

■REAR VIEW & CONNECTORS:

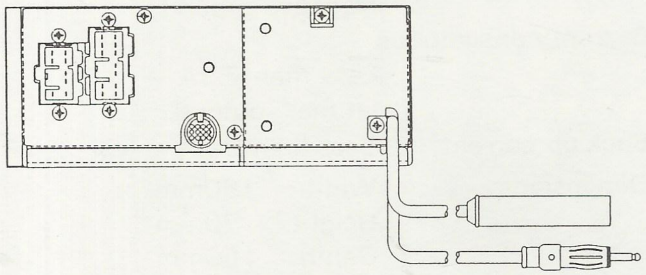

(MS-AL-8M)

K	SPEAKER-R-L ⊕
L	SPEAKER-R-L ⊖
M	SPEAKER-R-R ⊕
N	SPEAKER-R-R ⊖

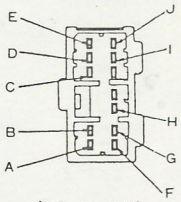

(MS-AL-12M)

A	SPEAKER-F-R ⊕
B	SPEAKER-F-L ⊕
C	TNS (ILLUMI.)
D	BACK UP
E	ACC
F	SPEAKER-F-R ⊖
G	SPEAKER-F-L ⊖
H	AMP CONT.
I	ANT. SW (ON EARTH)
J	SYSTEM MUTE

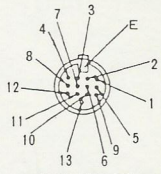

(DIN-13P-F)

1	OUTPUT-LH ⊕
2	INPUT-LH ⊕
3	OUTPUT-RH ⊕
4	INPUT-RH ⊕
5	SIGNAL EARTH
6	TNS (ILLUMI.)
7	⊕ ACC
8	⊕ B (BACK UP)
9	SYSTEM ON (ETR/ED)
10	NC
11	SYSTEM OFF (AUX)
12	B/T CUT
13	MUTE
E	GROUND

■ADJUSTMENTS:

FM

Adjustment item	Procedure
Fixing Diversity Circuit	Apply 5V to TP1 and fix the diversity circuit to MAIN.
0V Adjustment (Inside the tuner pack)	1. Make SG 98.1MHz, 25dB without modulation. 2. Connect a voltmeter to TP(C)+ and TP(D)−. 3. Adjust IFT(E) so that the voltmeter reading may become 0V±30mV.
Noise Converqence (Inside the tuner pack)	1. Set SG to 98.1MHz, output of 55dB, modulation frequency of 400Hz and modulation rate of 30%. 2. Adjust the output level to 0dB(0.775V) with the volume on the set. 3. Adjust the SG output to a value between −20dB and 55dB. 4. Adjust the output level to −20dB with the VR(B).
SD (Stop Sensitivity)	1. Fully turn the VR(A) (for SD) inside the FM tuner pack clockwise. 2. Ground TP2. 3. Set SG to 98.1MHz, output of 29dB, modulation frequency of 400Hz and modulation rate of 30% 4. Adjust VR102 so that TP3 may become between 0V and the range of 2.5~4.0V.
SASC	1. Input the 98.1MHz/65dB, 7kHz modulation frequency, 30% modulation degree SSG signal. 2. Adjust the output level of the volume controller to 0dBm (0.775V). 3. Set the SSG output to 40dB and adjust VR103 so that the output level is −1dB.
Separation	1. Input the 98.1MHz/65dB, 1kHz modulation frequency, 60% modulation degree SSG signal. (Pilot 10% mod.) 2. Set the stereo modulator to the L or R ch and adjust VR101 so that the maximum separation is obtained.

DOLBY NR

Adjustment item	Procedure
Dolby NR	Insert a Dolby level test tape (400Hz−200nWb/m), connect the milli-volt meter to TP201 and TP202, and adjust VR201 and VR301 to obtain an output of 300mV±1dB. (Dolby SW OFF)

AM

Adjustment item	Procedure
SD (Inside the tuner pack)	1. Connect the VDD (5V) to TP4 (Tuner pack 8 pin). 2. Input the 999kHz/34dB SSG signal. 3. Adjust VR(F) so that the voltage of TP3 is in the range 0V to 2.5~4.0V.

● ADJUSTMENT POINT

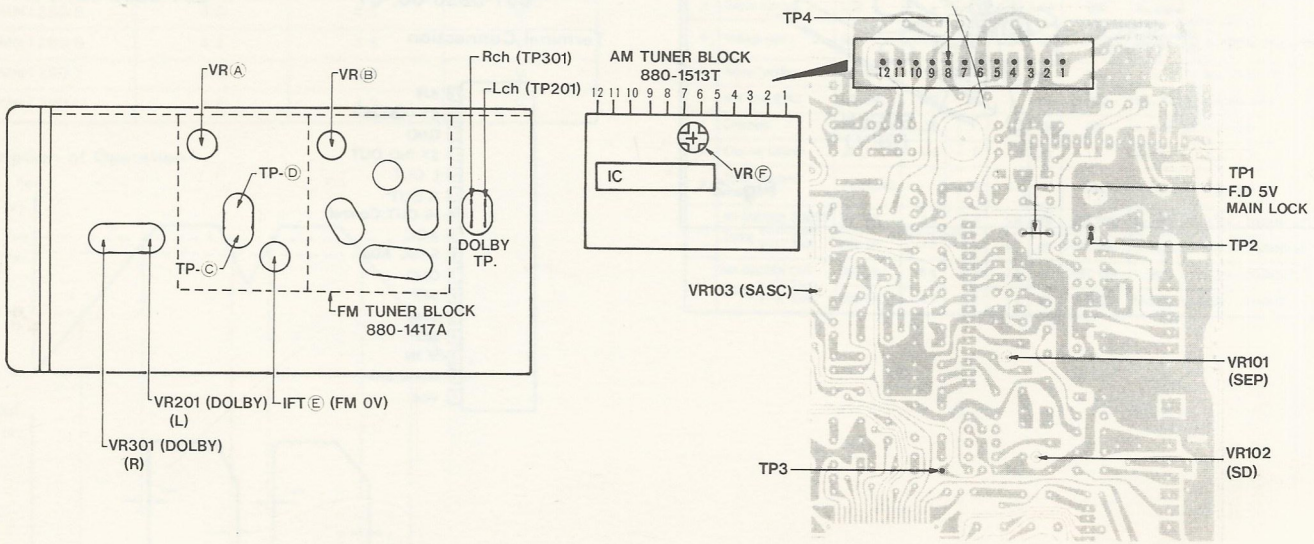

■MECHANISM ADJUSTMENT:

● Tape speed adjustment.

Play back the WOW SPEED tape (3kHz) and adjust the frequency counter value to be 2990Hz to 3120Hz or less with the VR1. (Refer to Fig. 1)

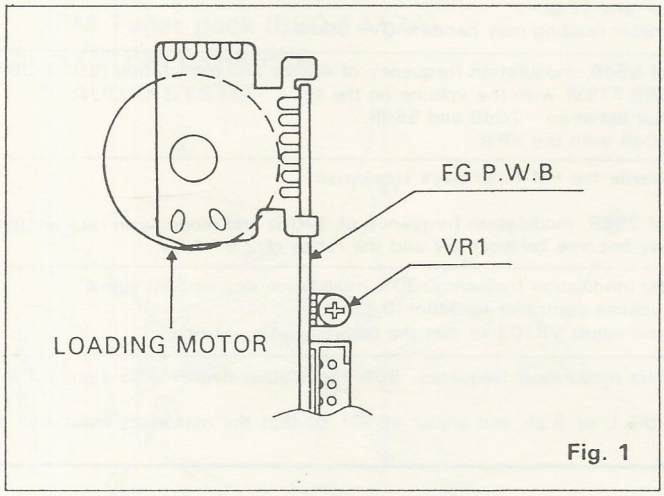

Fig. 1

● Head azimuth adjustment.

1. Play back azimuth tape (10kHz, −10dB) and adjust the screw so that the peak of FWD and REV will be 10kHz. (Refer to Fig. 2)
   As shown in the figure, ⓐ turn in the direction ⓐ tilts the head upward and a turn in the direction ⓑ tilts it downward.
2. After completion of adjustment, apply LOCK-TIGHT Bond to the ⓒ section. (Refer to Fig. 2)

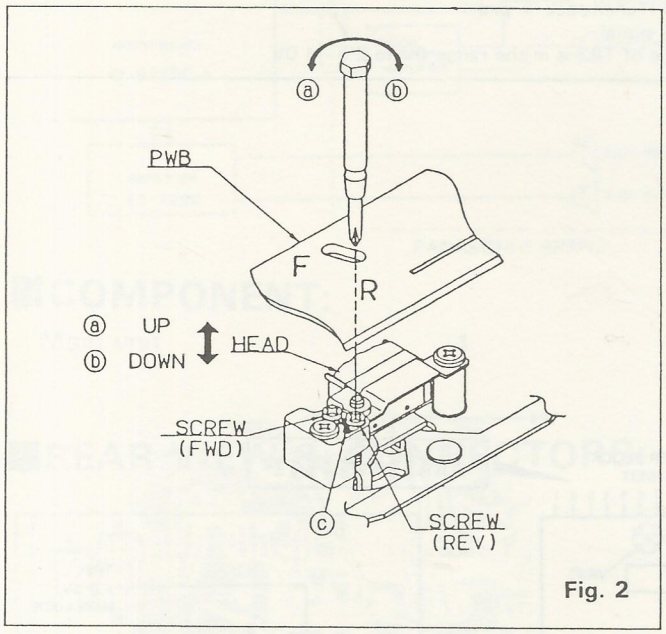

Fig. 2

■EXPLANATION OF IC's:

Refer to description in IC service manual vol. 1			
TC4066F	051-0267-05	Quad Bilateral Switch	P39

Refer to description in IC service manual vol. 2			
1WAY-D	051-0738-00	Hybrid IC for 1 WAY Diversity System	P6
LC2000C	051-0620-00	Music Interval Detection	P43
NJM2058M	051-0556-01	Quad OP. Amp.	P41
NJM4558M	051-0350-55	Dual OP. Amp.	P39
TC4013BF	051-0142-05	Dual D-type Flip Flop	P52
TDA1524A	051-0810-00	Tone & Volume Control	P30

■LA6358NM 051-0350-53 Dual OP Amp

Outward Form

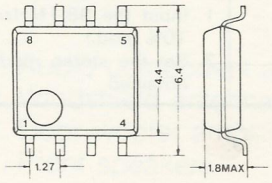

Block Diagram

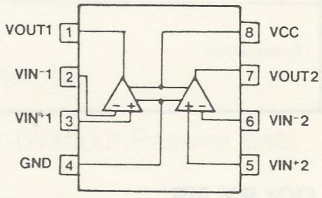

Absolute Maximum Ratings (Ta=25°C)

Item	Symbol	Ratings	Unit
Supply voltage	Vcc max	32	V
Differential input voltage	V_{ID}	32	V
Input voltage	V_{IN} max	−0.3 ~ +32	V
Power dissipation	Pd max	300	mW

■ MC5720 051-0890-00
MC5720B 051-0890-01
MC5720A 051-0890-10
MC5720C 051-0890-11
MPX with Noise Canceller for FM

051-0890-01 is improved from 051-0890-00.
051-0890-11 is improved from 051-0890-10.

Outward Form

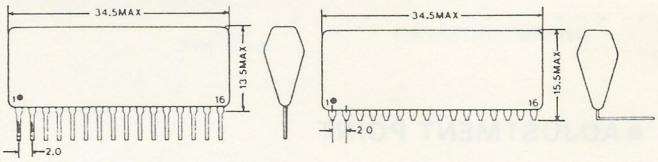

051-0890-00,-01 051-0890-10,-11

Terminal Connection

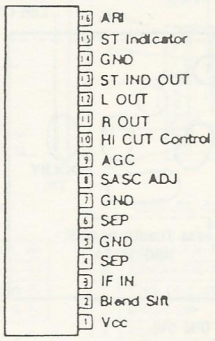

MN1280-G	051-0840-06	
MN1280-L	051-0840-10	
MN1280-M	051-0840-11	
MN1280-N	051-0840-12	
■MN1280-P	051-0840-13	IC for voltage detection
MN1280-Q	051-0840-14	
MN1280-R	051-0840-15	
MN1280-S	051-0840-16	
MN1280-T	051-0840-17	
MN1280-U	051-0840-18	

Outward Form

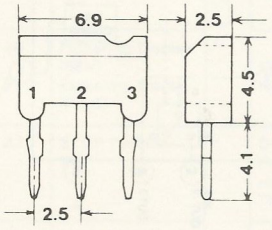

General

MN1280 is an element which is provided with functions to generate reset signals for initialization at turning on of power supply of microcomputers and other LSI systems and for prevention of system over-run at variations in power supply.

Features

- At power turning-on, generates reset signals until the voltage reaches to a set voltage.
- At power shut-off, generates reset signals when voltage drops below a set voltage.
- Generates the reset signals at supply voltage drop and release reset signals when the supply voltage returns to the normal level.
- Capable to detect life of cells.
- The detected voltage values are provided with hysteresis characteristics (ΔV_D)
  $V_{DH} - V_{DL} = 100 - 300mV$
  (V_{DH}: Detected voltage at high voltage, V_{DL}: Detected voltage at low voltage)

Absolute Maximum Ratings (Vss=0V, Ta=25°C)

Power voltage	V_{DD}	7.0V
Output voltage	V_O	$-0.3 \cdot V_{DD}+0.3V$

Terminal Connection

Terminal No.	Symbol	Terminal Name
1	OUT	Reset signal output terminal (Generates low level at reset and high level at reset release.)
2	V_{DD}	Supply voltage terminal
3	V_{SS}	Grounding terminal.

Detected Voltage

Rank \ Item	Detected voltage when supply voltage is low VDL		Unit
	min	max	
MN1280-G	2.4	2.6	V
MN1280-L	3.0	3.3	V
MN1280-M	3.2	3.5	V
MN1280-N	3.4	3.7	V
MN1280-P	3.6	3.9	V
MN1280-Q	3.8	4.1	V
MN1280-R	4.0	4.3	V
MN1280-S	4.2	4.5	V
MN1280-T	4.4	4.7	V
MN1280-U	4.6	4.9	V

Description of Operation

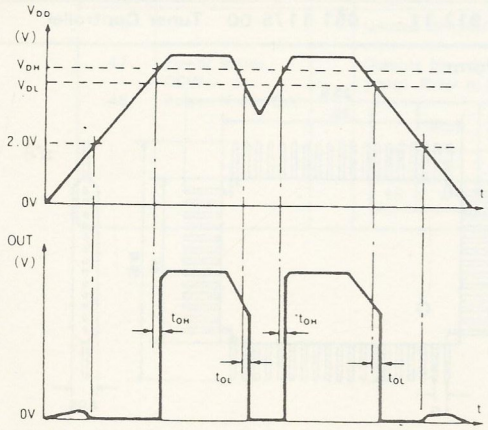

Note 1) As operation is not guaranteed at supply voltage of 2V or less, no output can be defined.
2) V_{DL}: Detected voltage when supply voltage is low.
V_{DH}: Detected voltage when supply voltage is high.
t_{OH}: Time from rise of supply voltage to V_{DH} until the output reaches High level.
t_{OL}: Time from drop of supply voltage to V_{DL} until the output reaches Low level.

■NR8810	051-0839-00	Dolby B type H-IC
NR8810-1	051-0839-01	

Outward Form

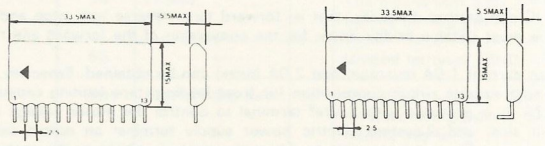

NR8810 NR8810-1

Maximum Ratings (Ta=25°C)

Item	Symbol	Rating	Unit
Maximum supply voltage	Vcc	18	V
Power dissipation	Pd	200	mV

Circuit Diagram

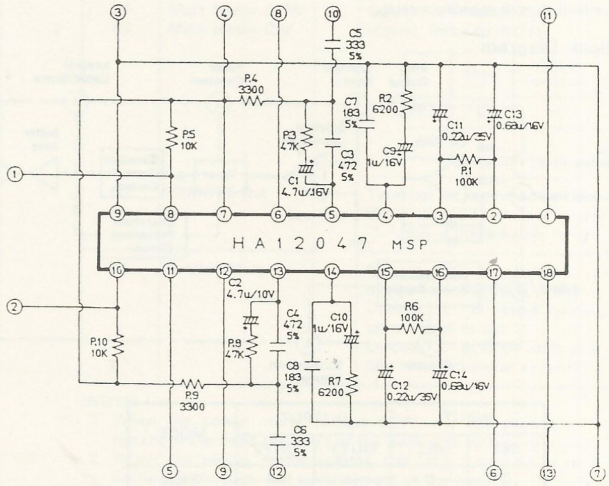

Electrical Characteristics

(Vcc=7.5V, Ta=25°C, V11(13)=0dB(NR-OFF))

NO	Item	Symbol	Rating Min	Rating Typ	Rating Max	Unit	NR ON (ENC/DEC)	Condition
1	Operating supply voltage	Vopr	6.0	7.5	12	V	-	
2	Circuit current	$I_q(1)$		18	25	mA	ON	No signal
3	Circuit current	$I_q(2)$		23	32	mA	OFF	No signal
4	Voltage gain	G_{VIA}	20.5	22	23.5	dB	-	$20 \log \frac{V8(9)}{V1(2)}$ f=400Hz, V8(9)=0dB
5	Signal handling	Vo max	14.0	16		dB	ENC	V11(13), f=1kHz, THD=1%
6	S/N ratio (ENC)	S/N ENC	60	65		dB	ENC	Rg=2.4kΩ CCIR/ARM Filter
7	Crosstalk	CT11→13	58			dB	OFF	f=1kHz, V11(13)=0dB
8	Channel balance	ΔG_{VIA}	-1.0	0	1.0	dB	-	$G_v(1\to11) - G_v(2\to13)$
9	Total harmonic distortion	T.H.D(ENC)	-	0.07	0.3	%	ENC	f=1kHz, V11(13)=0dB, off
10	NR ENCODE BOOST $20 \log \frac{V11(13)enc}{V11(13)off}$	ENC-2K	2.8	4.3	5.8	dB	OFF ENC	f=2kHz, V11(13)=-20dB(NR off)
		ENC-5K	1.7	3.2	4.7	dB	OFF ENC	f=5kHz, V11(13)=-20dB(NR off)
11	NR DECODE CUT $20 \log \frac{V10(12)enc}{V10(12)off}$	DEC-2K	-5.8	-4.3	-2.8	dB	DEC OFF	f=2kHz, V10(12)=-20dB(DEC)
		DEC-5K	-4.7	-3.2	-1.7	dB	DEC OFF	f=5kHz, V10(12)=-20dB(DEC)

■TA7291P 051-1014-00 Full Bridge Driver for D.C Motor

Outward Form

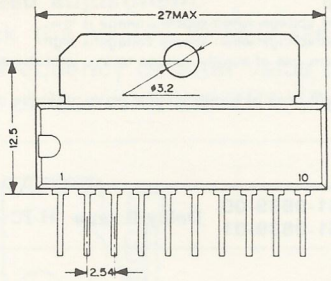

Outline

This IC can control 4 modes, that is, forward turn, reverse turn, stop and brake by the most suitable bridge driver for the conversion of the forward and reverse turns.

Output current 1.0A (average) and 2.0A (peak) can be obtained. Especially, it has the most suitable circuit composition for front loading, tape loading capstan reel of VTR. It is provided with a Vref terminal to control the motor voltage on the output side, and 2-system electric power supply terminal on output side and control side. Thus, it is possible to adjust the applied voltage to the motor. And also, it is possible to directly connect with C²MOS.

Features

- Operating power supply voltage range
  - Power supply voltage on logic side: Vcc (opr)=4.5~20V
  - Power supply voltage on output side: Vs (opr)=0~20V
  - Control power supply voltage: Vref (opr)=0~20V
  - Vcc, Vs and Vref do not make any erroneous operation under any large/small conditions.
- Output current: 1.0A (AVE.) 2.0A (PEAK)
- Built-in with heat shielding circuit and output terminal protector circuit
- Built-in with diode for absorbing the reverse electro-motive force.
- Built-in with input hysteresis circuit
- Built-in with standby circuit

Block Diagram

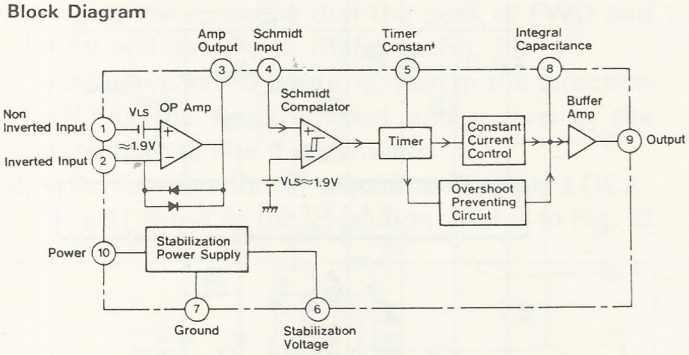

INPUT		OUTPUT		MODE
IN1	IN2	OUT1	OUT2	
0	0	∞	∞	Stop
1	0	H	L	CW/CCW
0	1	L	H	CCW/CW
1	1	L	L	Brake

∞ : High impedance
Note : Input is "H" active

TA7405P 051-0539-00 / ■TA7705P 051-0714-00 / TA7705F 051-0714-01 Dual Preamp for Auto Reverse Car Stereo

Outward Form

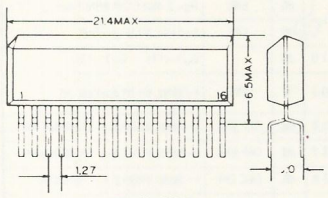

TA7405P

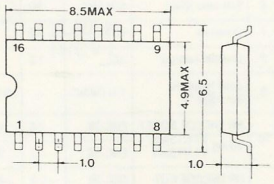

TA7705F

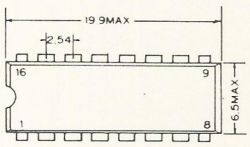

TA7705P

Block Diagram

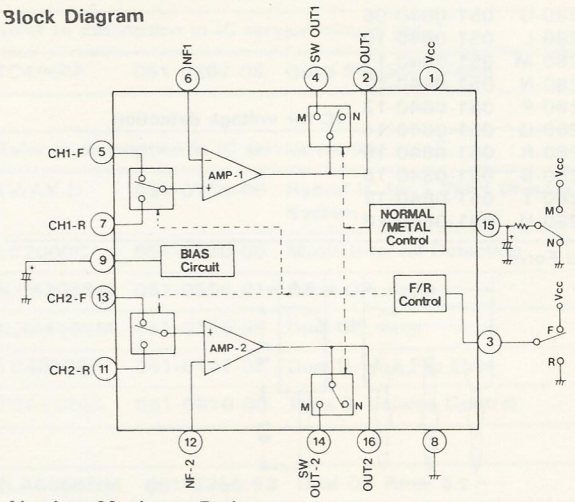

Absolute Maximum Rating

Item		Symbol	Rating	Unit
Power voltage		V_{CC}	16	V
Power dissipation	TA7405P TA7705P	P_D	750	mW
	TA7705F		350	

■TA8205H 051-0958-00 / TA8205AH 051-0958-01 15W BTL×2ch Power Amp.

051-0958-01 is modified from 051-0958-00.

Outward Form

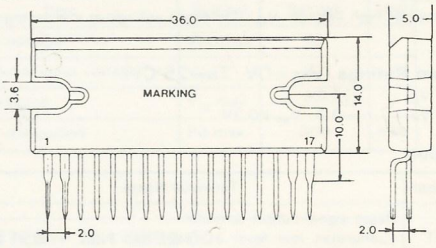

Block Diagram

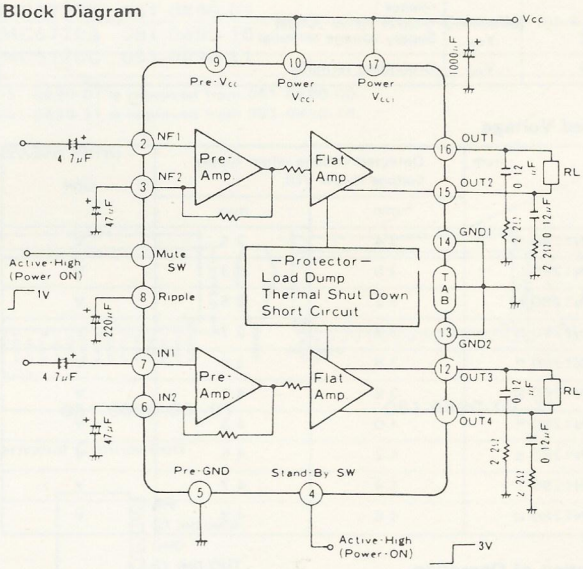

■μPD1719G-912-11 051-1175-00 Tuner Controller

I Outward Form

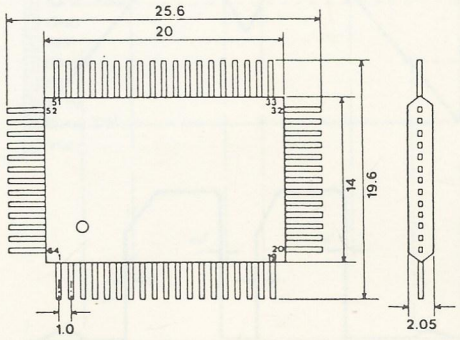

II Outline

This IC is a 4-bit 1-chip microcomputer incorporating a prescaler operatable up to 150MHz, PLL frequency synthesizer and LCD driver and this controls FM/AM radio. It has the following functions.

(1) 3-band type with FM1/FM2/AM
(2) Tuning UP/DOWN in AUTO/MANUAL
(3) Preset of 12 stations on each band
(4) Auto Memory Function
(5) Clock Function

III Terminal Connection Table

Pin No.	Symbol	I/O	Function
1	NC	–	Not in use.
2 3	EO1 EO2	O	The charge pump outputs of the phase detectors which consist of PLL. Unlock time allows the output of errors. fr>fosc/N : LOW Level fr<fosc/N : HIGH Level fr=fosc/N : Floating
4	V_{DD}	–	Power supply terminal.
5	AM	I	Input of local oscillation output from 0.6 to 1.5MHz.
6	FM	I	Input of local oscillation output from 15 to 150 MHz.
7	CE	I	Input of select signal for device. Normal operation : H level Unused : L level
8	V_{DD}	–	Power supply terminal.
9	RF-MUTE2 /APS	O	In radio mode: Output of control signal for stopping sensitivity at auto-tuning. Active H level. In tape mode: Every time APS Key is pressed, output is inverted. H level at APS.
10	REM OUT	O	Signal output for last-precedent system. External devices stop at H level.
11	M-ANT	O	Signal output for motor ANT control. UP at H level and DOWN at L level.
12	MTL	I	Signal input terminal for MTL. H level at MTL.
13	REM-IN	I	Signal input for last-precedent system. External devices enable at L level.
14	ST	I	At L level input, ST indication is lit.
15	RT	I	Radio/Tape mode select signal input. Radio mode : H level Tape mode : L level
16	AMIF	I	Input terminal of intermediate frequency for AM.
17	FMIF	I	Input terminal of intermediate frequency for FM.
18	RPT/SD	I/O	In radio mode: SD signal input. Active H level. In tape mode: Outputs H level when RPT indication is lit.
19	XME-LO	O	Outputs H level during auto-tuning and L level on reception.
20	FF	O	Outputs L level for approx. 1 sec. when FF key is pressed.
21	PLAY/PRO	O	Outputs L level for approx. 1 sec. when PLAY/PRO key is pressed.
22	STOP/EJECT	O	Outputs L level for approx. 1 sec. when STOP/EJECT key is pressed.
23	REW	O	Outputs L level for approx. 1 sec. when REW key is pressed.
24 25	XO XI	–	This is a connection terminal for a crystal oscillator. Connect a 4.5MHz crystal to it.
26	GND	–	Ground terminal.
27	CGP	O	CGP (Clock Generator Port) terminal.
28	RADIO ON	O	Radio ON/OFF control signal output. Active H level.
29	AF MUTE	O	Muting signal output to erase popping noise at PLL unlocking and at mode selection. Active H level.
30	RF MUTE1	O	Output of control signal for stopping sensitivity at auto-tuning. Active H level.
31	AM/FM	O	In radio mode: Output for tuner band switching. H level at FM and L level at AM. In tape mode: Output of Dolby function control. Active H level.
32 ~ 39 48 ~ 50	LCD23 ~ LCD16 LCD7 ~ LCD5	O	Segment signal output terminal to the LCD panel.
40 ~ 47 51 ~ 55	LCD15/KS15 ~ LCD8/KS8 LCD4/KS4 ~ LCD0/KS0	O	Terminal which outputs segment signal to the LCD panel and key matrix signal.
56 57	COM1 COM2	O	Common signal output terminal to the LCD panel.
58	GND	–	Ground terminal.
59 ~ 62	K3 ~ K0	I	Key return signal terminals for key matrix.
63	AD	I	A/D converter input.
64	GND	–	Ground terminal.

IV Key Matrix

§ 1. Key Matrix Connection Table

Key Out \ Key In	K3 (Pin 59)	K2 (Pin 60)	K1 (Pin 61)	K0 (Pin 62)
KS0 (Pin 55)	FM BAND	———	AREA2	AREA1
KS1 (Pin 54)	———	AM-5K	CLK SEL	M/F
KS2 (Pin 53)	———	RADIO/ COMBI	IF-C	RAD SW SEL
KS3 (Pin 52)	———	TAPE SEL	MTL SEL	———
KS4 (Pin 51)	REW	FF	REV	FWD
KS8 (Pin 47)	MU	MD	0-ADJ	DISP
KS9 (Pin 46)	SEEK UP	SEEK DN	SCAN UP	SCAN DN
KS10 (Pin 45)	RADIO ON/OFF	SCAN/ DOLBY	MAD	MAU
KS11 (Pin 44)	XME	FM/AM	M6	M5
KS12 (Pin 43)	M4	M3	M2	M1
KS13 (Pin 42)	TI	MTL	DOLBY	APC
KS14 (Pin 41)	PLAY/PRO	REW	FF	STOP/EJECT
KS15 (Pin 40)	RPT	H-ADJ	M-ADJ	———

Momentary SW Diode SW Alternate (Transistor) SW

(Note) Some of the sets equipped with this microcomputer are not provided with all the above keys.

§ 2. Diode SW

(Note) In the following table, "0" denotes the diode switch being turned off (open), and "1" it being on (short-circuit).

Symbol	Functions
FM BAND	A switch to set the number of bands for FM. 1 : 1 band 0 : 2 band
AREA1 AREA2	These switches are used for setting a destination. AREA1 / AREA2 / Region 1 / 1 / USA-I 0 / 1 / JAPAN 1 / 0 / EXP 0 / 0 / USA-II
AM-5K	A switch to set the step of AM for USA-I and II specification. 1 : channel space 5kHz 0 : channel space 10kHz
CLK SEL	Switch for setting with or without clock function. 1 : with clock 0 : without clock

Symbol	Functions
M/F	A switch to set the specification. 1 : F specification 0 : M specification
RADIO/COMBI	A switch to set RADIO only or combination of RADIO and TAPE. 1 : COMBI 0 : RADIO
IF-C	A switch to set station detecting method at auto-tuning. 1 : Uses SD terminal only 0 : Uses both SD and IF terminals.
RADIO SW SEL	A switch to select a method of POWER ON/OFF. 1 : RADIO ON/OFF switch disabled 0 : RADIO ON/OFF switch enabled
TAPE SEL	A switch to set existence of failure display at tape mode. 1 : Failure display disabled 0 : Failure display enabled
MTL SEL	A switch to set AUTO MTL. 1 : Momentary method 0 : AUTO MTL

§ 3. Alternate (Transistor) SW

Symbol	Functions
REW FF REV FWD	Switches to detect PLAY and FF status at tape mode.

Status	SW name			
	REW	FF	REV	FWD
FWD	OFF	OFF	OFF	ON
REV	OFF	OFF	ON	OFF
FWD FF	OFF	ON	OFF	ON
FWD REW	ON	OFF	OFF	ON
REV FF	OFF	ON	ON	OFF
REV REW	ON	OFF	ON	OFF

§ 4. Momentary SW

Symbol	Functions
DISP	A changeover switch for frequency display/tape display/clock display.
0-ADJ	A switch for adjusting to time tone.
MU MD	Switches for manual tuning and clock adjustment.
MAU MAD	Switches for auto-tuning (manual operation if pressed within 0.5 second) and clock adjustment.
SCAN UP SCAN DN	Switches to perform auto-tuning in SCAN mode.
SEEK UP SEEK DN	Switches to perform auto-tuning in SEEK mode.
XME	A switch for auto preset memory.
RADIO ON/OFF	Radio ON/OFF SW.
SCAN/DOLBY	SCAN UP switch in radio mode and Dolby ON/OFF switch in tape mode.
FM/AM	Band select SW.
M1 M6	Switches for calling and writing of preset memory. o Calling: Release the switch within 1.5 second. o Writing: Keep pressed the switch longer than 1.5 second.
TI	A switch to receive traffic information in Japan. AM 1,620kHz is called when this switch is pressed.
H-ADJ M-ADJ	Switches for clock adjustment. HOUR and MINUTE can be adjusted with the switches H-ADJ and M-ADJ, respectively.
PLAY/PRO, STOP/EJECT, FF, REW, RPT, APC, MTL, DOLBY	Switches to control each function in tape mode.

■μPD75104G-595-1B 051-1176-12 Tape Mechanism Controller

I Description

This IC is a 4-bit 1-chip microcomputer to control the cassette tape mechanism 930-0590-XX (SF-X).

II Outward Form

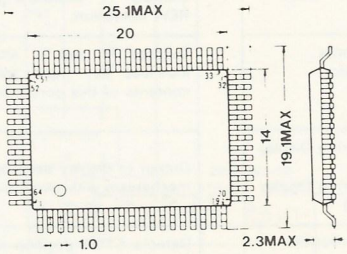

III Features

a) Key off head release.
b) Finding the beginning of a selection possible.
c) Either one of two sets of functions, one with "STOP/EJECT", "PLAY/PROG", "FF" and "REW" and the other with "EJECT", "PLAY/PROG", "FF" and "REW", can be selected for operation keys.
d) For display, four outputs exclusively for FWD, REV, FF and REW. In addition, there is a flickering display output to display each operation mode with two indicators.
e) EJECT operation possible with ACC power OFF.
f) Automatic metal tape detecting function.
g) Other than operation keys for mechanism, there are "APC" key input and APC indicator output as well as "Dolby" key input and Dolby indicator output.
h) Indicator OFF mode.
i) External input terminal and tape mode output terminal are provided.

IV Descriptions on Terminals

Terminal No.	Terminal Name	I/O	Function
1	Deck Mute	O	Outputs "L" at stable running of PLAY and "H" in other modes.
2	Input Level Changeover		Attenuates input level of APC IC (LA2000). "L" at PLAY and "H" at FF/REW.
3	REW Indicator		Outputs "H" when the mechanism is operating REW.
4	FF Indicator		Outputs "H" when the mechanism is operating FF.
5	REV Indicator		Outputs "H" at PLAY, FF or REW with the running direction REV.
6	FWD Indicator		Outputs "H" at PLAY, FF or REW with the running direction FWD.
7	$\overline{\text{RESET}}$	I	Setting to "L" resets and initializes the mechanism. Setting "H" starts it.
8	X2	–	Terminals for ceramic oscillator. (System clock 4.1MHz)
9	X1		
10	Reel Pulse (REV)	I	Inputs the output from the photoreflector on REV side of the mechanism and detects tape end. Repeats "H" and "L" while running and is fixed to "H" or "L" at the end.
11	Reel Pulse (FWD)		Inputs the output from the photoreflector on FWD side of the mechanism and detects tape end. Repeats "H" and "L" while running and is fixed to "H" or "L" at the end.
12	PLAY Position SW		Detects PLAY position on the mode plate of the mechanism. "L" at PLAY and "H" otherwise.
13	APC Position SW		Detects APC position on the mode plate of the mechanism. "L" at APC and "H" otherwise.
14	Dolby IC Changeover	O	Outputs "H" and "L" alternately according to Dolby key input (pin 42). The output contents of this port is backed up. Active "H".
15	Dolby Indicator		Outputs "H" and "L" alternately according to Dolby key input (pin 42). The output contents of this port is backed up. Output with the same phase as pin 14.
16	APC Indicator		Outputs "H" and "L" alternately according to APC key input (pin 43). The output contents of this port is backed up. Active "H".

Terminal No.	Terminal Name	I/O	Function
17	METAL Indicator	O	Outputs "L" at normal tape or "H" at Chrome/metal tape according to the status of automatic metal tape detection SW input (pin 44). The output of this port is retained until EJECT.
18	FF/REW Mode		Outputs "H" while the mechanism is in FF or REW operation.
19	Loudness Indicator		Outputs "H" and "L" alternately according to loudness key input (pin 29). The output contents of this port is backed up. Active "H".
20 21	Flickering Display (REV) Flickering Display (FWD)		Output to display each operation mode of the mechanism with two indicators.
22	STOP Position SW	I	Detects STOP position on the mode plate of the mechanism. "L" at STOP (head pinch roller release) and FF/REW other than APC. "H" in other modes.
23	EJECT Complete SW		Detects EJECT completion on the mode plate of the mechanism. "L" at EJECT completion. "H" otherwise.
24	Load Start SW		Detects PACK-IN (Loading start) in EJECT status. Pressing PACK changes "L" to "H" and starts loading.
25	PACK Mounting SW		Detects normal mounting of PACK in the mechanism, at loading completion. "L" at normal mounting and "H" at no pack or floating of pack.
26	Vss	–	GND terminal.
27	Key Select	I	Selects "STOP/EJECT" key at "L". Selects "EJECT" key at "H".
28		–	Unused terminal. (GND)
29	Loudness Key	I	Reverses indicator output (pin 19) by turning this to "L".
30	STOP/EJECT Key		Transfers to STOP from PLAY/FF/REW and to EJECT from STOP.
31 36		–	Unused terminal. (GND)
37	Failure Display Select	I	Performs failure display (flickering) by using pins 20 and 21 at "H".
38	Indicator OFF Mode Select		Sets indicator OFF mode by using APC Key/Dolby Key at "H".
39	REMOTE-In		External input terminal. Transfers to STOP by changing "H" to "L" at PLAY/FF/REW. STOP state continues if changed from "L" to "H".
40	APC Level		Input the output of APC IC (LA2000). "H" when there is a selection, and "L" at blank detection.
41		I	Unused terminal. (GND)
42	Dolby Key		Reverses indicator output (pin 15) and IC changeover output (pin 14) by turning this to "L".
43	APC Key		Reverses indicator output (pin 16) by turning this to "L".
44	METAL SW		Inputs the status at loading PLAY, ACC-ON PLAY and detects metal tape automatically. "L" for chrome/metal tape, "H" for normal tape.
45	TAPE-In	O	Outputs "H" while a tape is in the mechanism.
46		–	Unused terminal. (OPEN)
47 48	Power Motor CCW Power Motor CW	O	Outputs for rotation control of mode control motor. Refer to (NOTE).

	Stop	Brake Mode	CCW Rotation	CW Rotation
47	L	H	H	L
48	L	H	L	H

Terminal No.	Terminal Name	I/O	Function
49 50	————	–	Unused terminal. (GND)
51	APC	I	If this terminal is retained "H" at FF operation, the beginning of the next selection is found. If this terminal is retained "H" at REW operation, the beginning of the current selection is found.
52	ACC Detect		Checks ACC 5V line and detects ACC-OFF. "L" for ACC-OFF and "H" for ON.
53	REW Key		The mechanism does REW to the running direction by turning this to "L".
54	FF Key		The mechanism does FF to the running direction by turning this to "L".
55	————	–	Unused terminal. (GND)
56	PLAY/PROG Key	I	Transfers to PLAY from FF/REW/STOP, or reverses the playback direction at PLAY, by turning this to "L".
57	————	–	Unused terminal. (V_{DD})
58	V_{DD}		Power supply terminal. (5V)
59	Back Up	O	Outputs "H" at each operation of the mechanism, key off head release and at EJECT and completes the operation even if ACC power is turned OFF.
60	Speed		Terminal for speed change of main motor. "H" at PLAY and "L" for FF (REW) double speed.
61 62	Main Motor CCW Main Motor CW		Output for rotation control of main motor (FG motor). Refer to (NOTE).

	Stop	CCW Rotation	CW Rotation
61	L	H	L
62	L	L	H

63	REMOTE-Out		Terminal for tape mode output. When REMOTE-In is changed from "H" to "L", this is immediately turned to "L".
64	System Mute		Outputs "H" at changing operation of the mechanism (the same phase as pin 1). Outputs "L" at stable running of PLAY (the same phase as pin 1). Outputs "L" at STOP state or EJECT operation (the reversed phase as pin 1).

(NOTE)

1. When the power motor rotates CCW, the operation is to the direction of retract of the head and eject of the pack with further rotation.
2. When the power motor rotates CW, the operation is to the direction of loading of the pack and advancement of the head.
3. When the main motor rotates CCW, REV-PLAY, FF operation at REV and REW operation at FWD.
4. When the main motor rotates CW, FWD-PLAY, FF operation at FWD and REW operation at REV.

■BLOCK CIRCUIT DIAGRAM:

◎FM TUNER BLOCK Ass'y 880-1417A

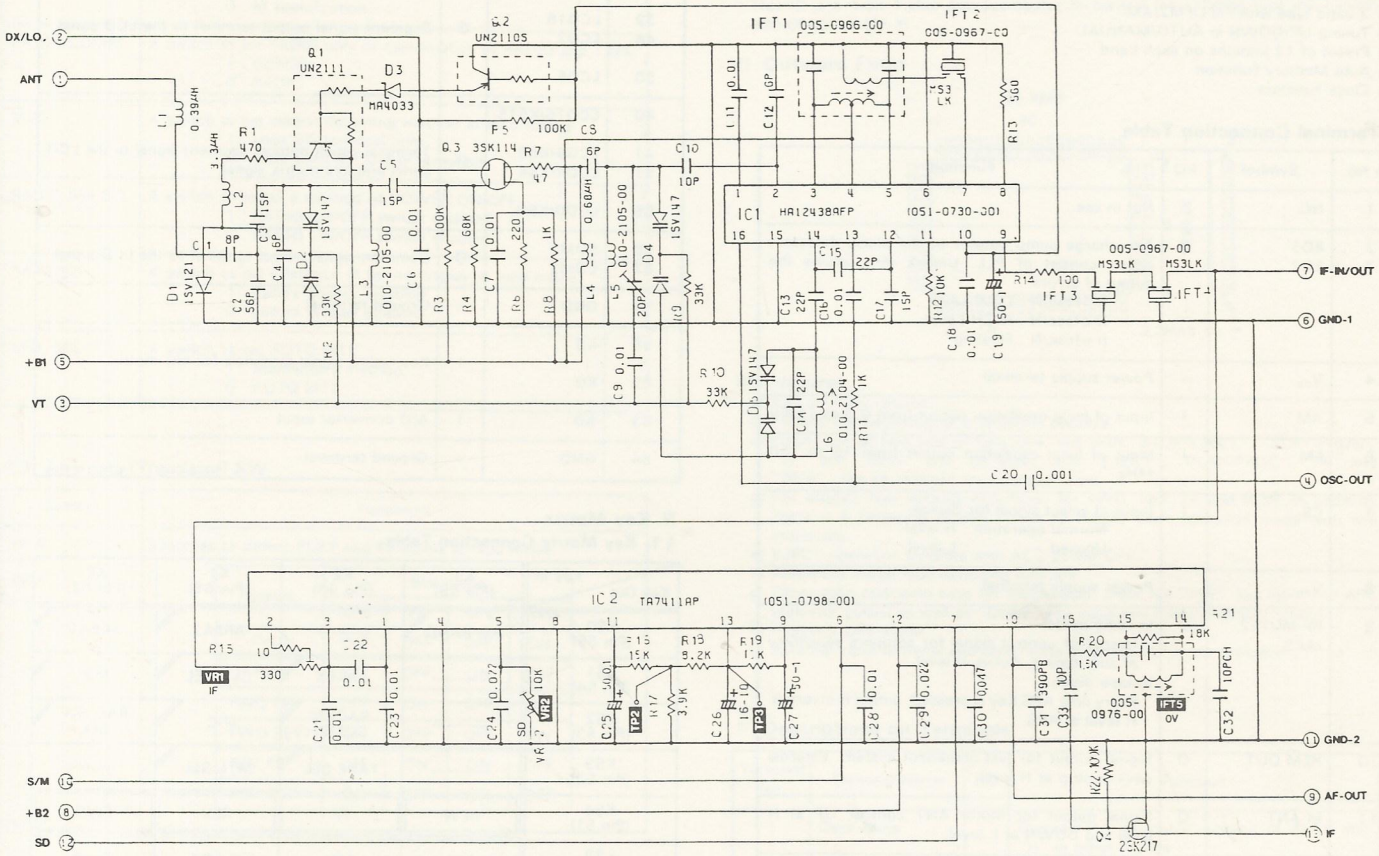

◎AM TUNER BLOCK Ass'y 880-1513T

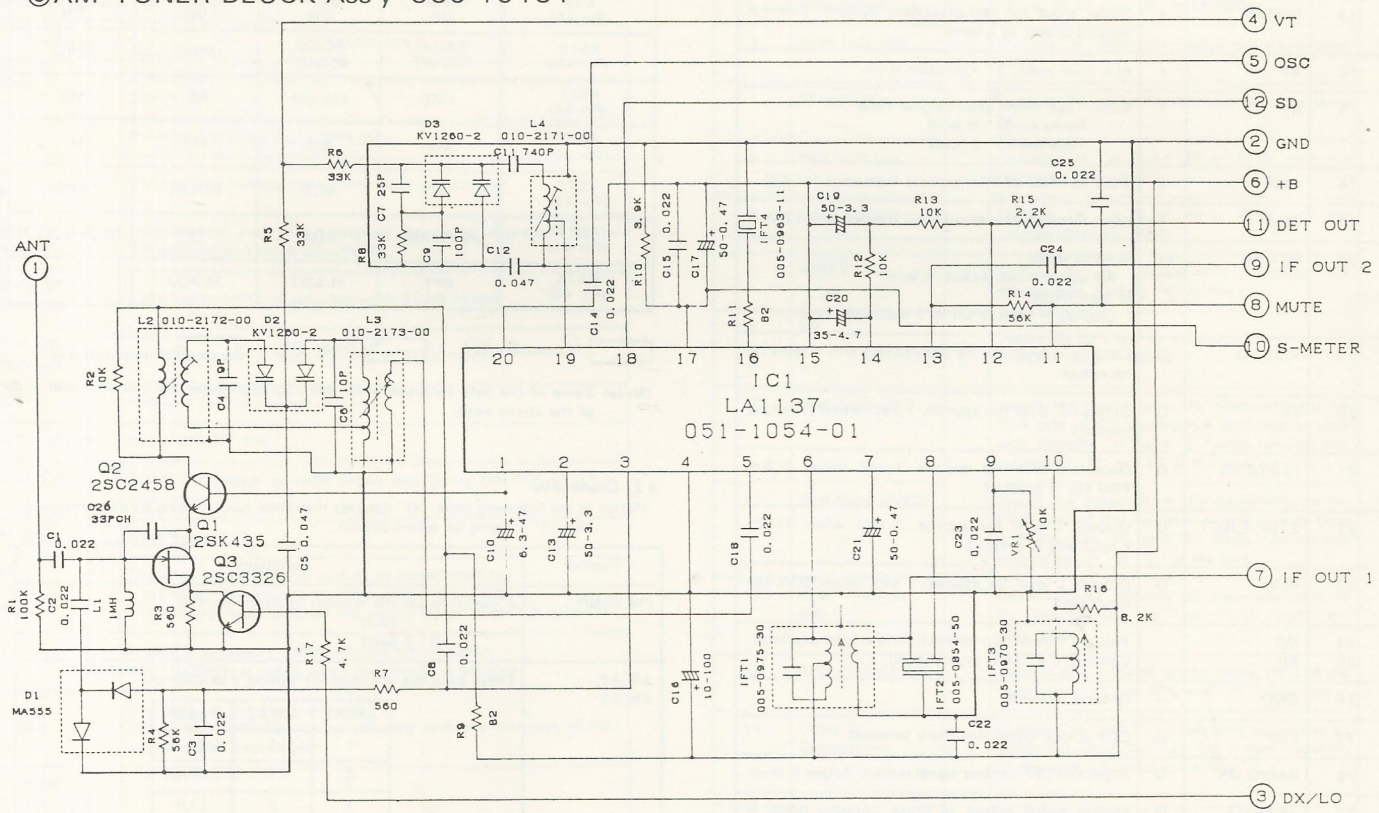

■EXPLODED VIEW • PARTS LIST:

◎Main section

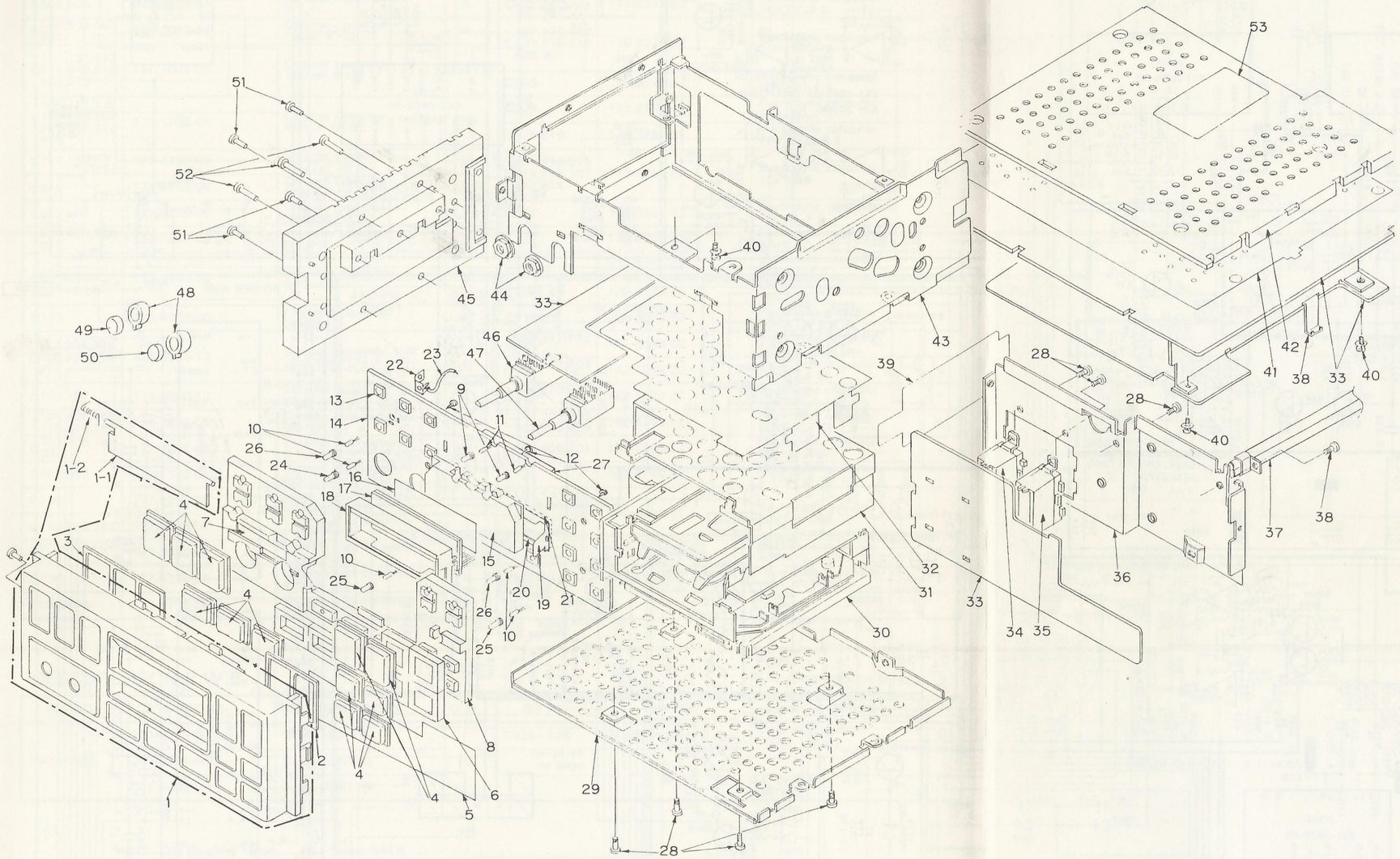

REF.NO.	PART NO.	DESCRIPTION	Q'TY
1	940-1071A	Escutcheon ass'y	1
1-1	320-0439-03	Dustproof cover	1
1-2	750-2309-01	Spring	1
2	345-4935-00	Cushion	1
3	345-4936-00	Cushion	1

REF.NO.	PART NO.	DESCRIPTION	Q'TY
4	947-0193-01	Button ass'y	1
5	347-2856-01	Shade	1
6	345-4937-01	Cushion	1
7	347-2855-00	Shade	2
8	335-2982-01	Lamp illumination	1
9	345-3436-41	Rubber cap	2
10	017-0396-00	Pilot lamp	5
11	017-0397-00	Pilot lamp	2
12	716-0645-00	Screw	3
13	013-3694-10	Switch	17
14	099-8623-01	P.W.B	1
15	335-3022-00	LCD illumination	1
16	335-3035-00	Reflector	1
17	379-0242-00	Indicator	1
18	330-9081-00	LCD holder	1
19	330-9101-01	Shield plate	1
20	347-2862-01	Shade	1
21	347-2861-00	Insulator	1
22	330-9102-00	Earth plate	1
23	800-0106-00	Vinyl coat wire	1
24	345-3436-45	Rubber cap	1
25	345-3436-35	Rubber cap	2
26	345-3436-15	Rubber	2
27	345-4950-00	Spacer	1
28	714-3005-81	Machine screw (M3x5)	14
29	311-1390-00	Lower case	1
30	930-0590-00	Tape mechanism	1
31	312-0317-02	Mechanism chassis	1
32	347-2857-02	Insulator	1
33	099-8705-00	P.W.B	1
34	074-0886-00	Outlet socket (8P)	1
35	074-0877-10	Outlet socket (12P)	1
36	307-0428-00	Rear cover	1
37	092-0591-04	Antenna receptacle	1
38	330-9084-00	Space plate	1
39	347-2864-00	Insulator	1
40	735-3008-11	D-sems screw (M3x8)	10
41	347-2859-01	Insulator	1
42	310-1381-00	Upper case	1
43	306-0234-02	Side case	1
44	722-0519-00	VR nut	2
45	313-1370-00	Heat sink	1
46	012-4832-00	Variable resistor	1
47	012-4847-00	Variable resistor	1
48	380-5040-00	Knob	2
49	380-5038-00	Knob	1
50	380-5039-00	Knob	1
51	714-3010-81	Machine screw (M3x10)	5
52	714-3020-81	Machine screw (M3x20)	3
53	286-7225-02	Set plate	1

■CIRCUIT DIAGRAM: 2/2

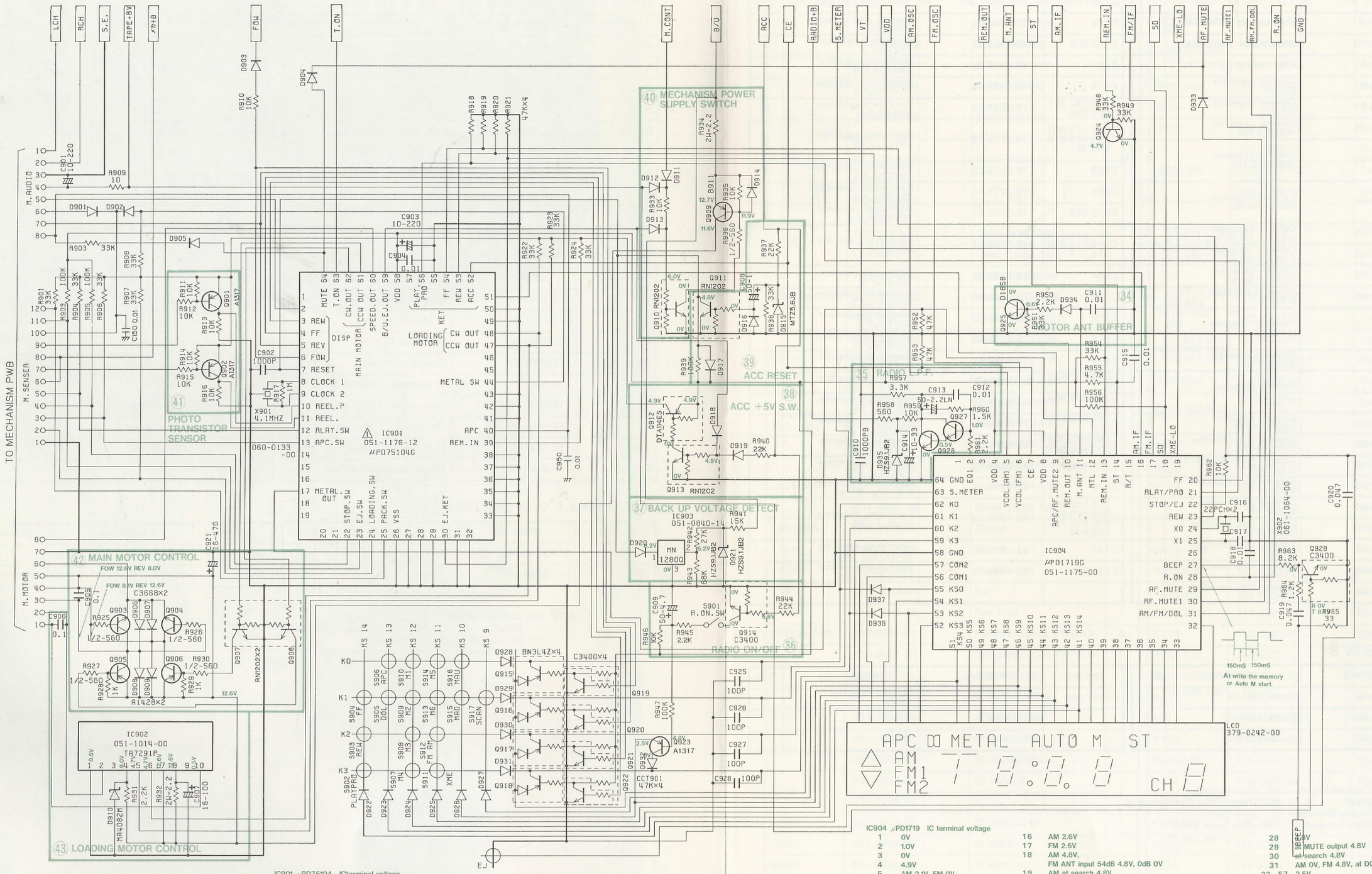

IC901 μPD75104 ICterminal voltage
"play" operation except for no-stated "IC terminal voltage"

1	N.C.			50	0V
2	at PLAY 0V, at FF/REW 4.8V	18~21	0V	51	0V, at APC 4.9V
3	at REW 4.8V, other MODE 0V	22	4.8V	52	4.9V
4	at FF 4.8V, other MODE 0V	23	4.8V	53	4.8V
5	at REV 4.8V, other MODE 0V	24	4.8V	54	4.8V
6	at FOW 4.8V, other MODE 0V	25,26	0V	55	0V
7	4.8V	27~29	0V	56	4.8V
8	2.5V	30	4.0V	57	N.C.
9	2.5V	31~38	0V	58	4.9V
10	0V~3.8V	39	4.6V	59	0V
11	0V~3.8V	40	0.2V	60	4.8V
12	at PLAY 0V	41~43	0V	61	4.8V
13	at PLAY 4.8V	44	NORMAL 4.8V, METAL 0.5V	62	0V
14	N.C.	45,46	N.C.	63	4.8V
15	0V	47	4.5V	64	0V
16	0V	48	4.5V		
17	NORMAL TAPE 0V, METAL 4.8V	49	0V		

IC904 μPD1719 IC terminal voltage

1	0V	16	AM 2.6V	28	4.8V
2	1.0V	17	FM 2.6V	29	MUTE output 4.8V
3	0V	18	AM 4.8V,	30	at search 4.8V
4	4.9V		FM ANT input 54dB 4.8V, 0dB 0V	31	AM 0V, FM 4.8V, at DOLBY 4.8V
5	AM 2.1V, FM 0V	19	AM at search 4.8V,	32~57	2.5V
6	AM 0V, FM 2.1V		FM at only receiving broad casting will AUTO-M on 4.8V	58	0V
7	4.8V	20	RADIO 4.8V, TAPE at FF SW ON 0V	59	0V
8	4.9V	21	RADIO 4.8V, TAPE at PLAY/PRO ON 0V	60	2.1V
9	at search 4.8V, at APC 4.8V	22	RADIO 4.8V, TAPE at TAPE →RADIO ON 0V	61	0V
10	4.8V	23	RADIO 4.8V, TAPE at REW SW ON 0V	62	0V
11	4.8V	24	3.0V	63	0V, at ANT input −20dB
12	at MTL 4.8V	25	2.6V	64	0V
13	4.8V	26	0V		
14	at ST 0.6V				
15	1.0V				

■CIRCUIT DIAGRAM:

◎Tape mechanism section 930-0590-00

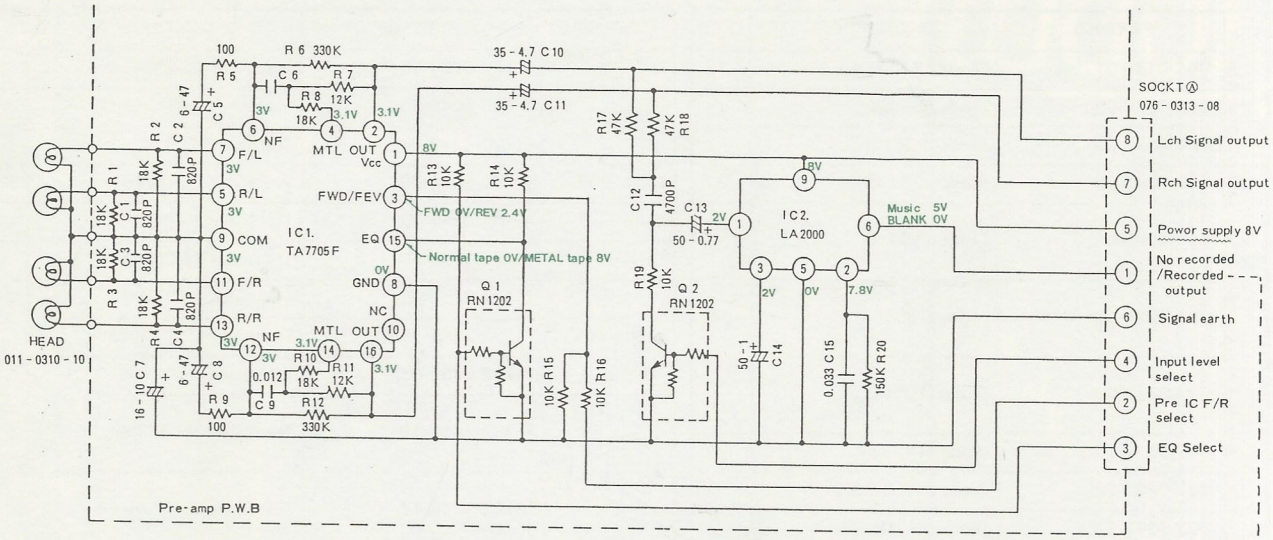

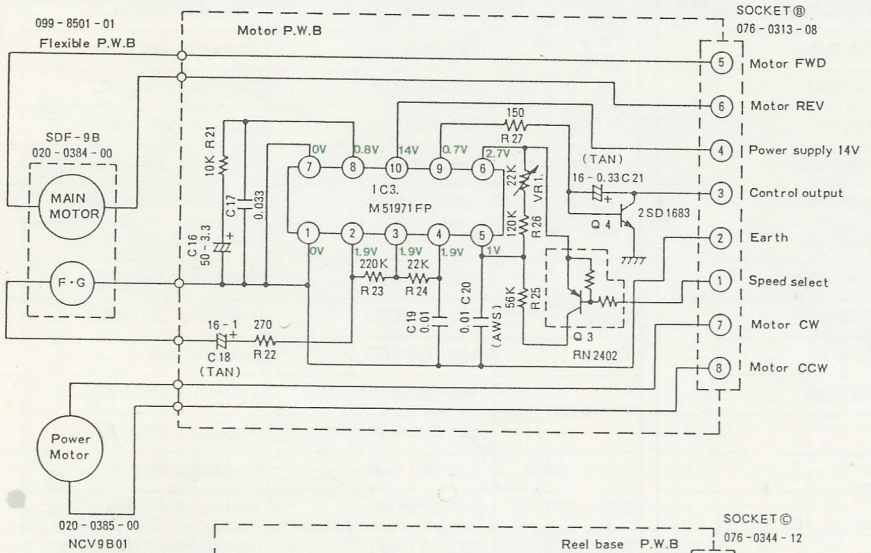

◎Codition:

Supply 8V to socket Ⓐ⑤Pin

Supply 14V to socket Ⓑ④Pin

※Specified Voltage are with Tape play mode.

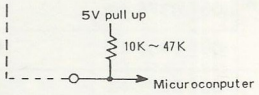

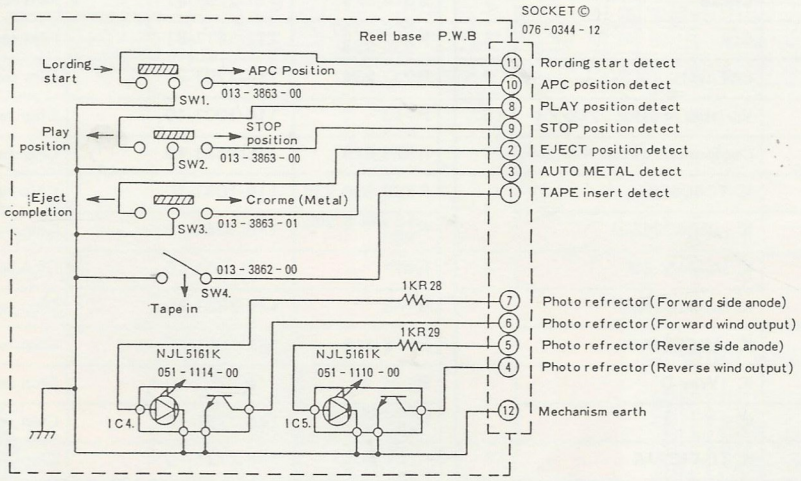

■PARTS LIST:

◎Electrical section

◎MAIN P.W.B

REF.NO.	PART NO.	DESCRIPTION	Q'TY
D804	001-0188-01	Diode 1S1885A	1
D808,809,817	001-0360-00	Diode S5566B	3
	(001-0447-00)	Diode (DSF10B)	
D101,104,105	001-0361-00	Diode 1SS198	3
D 102,103 106~108 802,803,806 812~814 816 819~822 901~909 911~913 916~920 932~934 936,937	001-0330-00	Diode 1SS119	38
	(001-0294-00)	Diode (1SS133)	
	(001-0352-00)	Diode (1SS176)	
D109	001-0377-10	Diode MA4030L	1
	(001-0400-17)	Diode (HZS3.3EB2)	
D401,801,915	001-0377-32	Diode MA4056M	3
	(001-0376-32)	Diode (MTZ5.6JB)	
	(001-0400-32)	Diode (HZS5.6JB2)	
D910	001-0377-44	Diode MA4082M	1
	(001-0376-45)	Diode (MTZ8.2JC)	
	(001-0400-44)	Diode (HZS8.2JB2)	
D 811,815,818 921,935	001-0377-47	Diode MA4091M	5
	(001-0376-48)	Diode (MTZ9.1JC)	
	(001-0400-47)	Diode (HZS9.1JB2)	
D805,810	001-0377-48	Diode MA4091H	2
	(001-0376-49)	Diode (MTZ10JA)	
	(001-0400-48)	Diode (HZS9.1JB)	
L 802,803	009-0470-02	Choke	2
L 804	009-0603-03	Choke	1
L 801	009-0633-01	Choke	1
L 101	010-2003-03	Coil	1
L 102	010-2046-44	Coil 1mH	1
VR101~103	012-4431-07	Variable resistor 22kΩ VR	3
CCT901	050-0077-60	Component circuit 47kΩx4	1
IC703	051-0267-05	IC TC4066BF	1
	(051-0267-55)	IC (μPD4066BG)	
IC402	051-0350-55	IC NJM4558M	1
IC701	051-0556-01	IC NJM2058M	1
	(051-0556-00)	IC (AN6554NS)	
IC101	051-0738-00	IC 1Way-D	1
	(051-0738-70)	IC	
IC702	051-0810-00	IC TDA1524A	1
IC401	051-0839-00	IC DOLBY	1
IC903	051-0840-14	IC MN1280Q	1
IC102	051-0890-01	IC NC MPX	1
IC704,705	051-0958-01	IC TA8205AH	2
IC902	051-1014-00	IC TA7291P	1
IC904	051-1175-00	IC μPD1719G-912-11	1
IC901	051-1176-12	IC μPD75104G-595-1B	1
SUP101,102	060-0122-10	Surge protector (4.1MHz)	2
X901	060-0133-00	Ceramic resonator	1
X902	061-1064-00	Crystal	1

REF.NO.	PART NO.	DESCRIPTION	Q'TY
Q 804,814,817 821	100-0684-50	Transistor 2SA684	4
Q 809,901,902 923	100-1048-50	Transistor 2SA1048	3
	(100-1317-50)	Transistor (2SA1317)	
Q905,906	100-1428-00	Transistor 2SA1428	2
Q909	101-0911-00	Transistor 2SB911	1
Q810	102-1846-50	Transistor 2SC1846	1
Q501,601	102-2458-25	Transistor 2SC2458Y	2
	(102-2458-15)	Transistor (2SC2458)	
	(102-2785-68)	Transistor (2SC2785)	
Q 102,105,106 107,111,802 803,804,820 924,926,927	102-2458-49	Transistor 2SC2458Y,GR	12
	(102-2785-49)	Transistor (2SC2785HF)	
Q 108,701,702 807,914 919~922 928	102-3400-00	Transistor 2SC3400	10
	(125-2003-03)	Transistor (RN1203)	
Q 811,812,815 818,907,908 910,911,913	102-3402-00	Transistor 2SC3402	9
	(125-2003-02)	Transistor (RN1202)	
Q903,904	102-3668-00	Transistor 2SC3668O,Y	2
Q 201,301,502 602	103-1450-50	Transistor 2SD1450S,T	4
	(103-1504-05)	Transistor (2SD1504E)	
Q805	103-1683-00	Transistor 2SD1683	1
Q 813,816,819 925	103-1858-50	Transistor 2SD1858	4
Q110	108-0369-00	FET 2SK369	1
Q109,801,912	125-0003-02	Transistor RN2202	3
	(125-0004-91)	Transistor (DTA114ES)	
Q915~918	125-0011-00	Transistor BN3L4Z	4
R814,829	111-2291-81	Film resistor 1/2W2.2Ω	2
R 925~927 930,936	111-5611-81	Film resistor 1/2W560Ω	5
R932,934	114-2291-21	Film resistor 2W2.2Ω OM	2
R713	116-1001-10	Chip resistor 1/8W10Ω	1
R928,929	116-1021-10	Chip resistor 1/8W1kΩ	2
R508,608,935	116-1031-10	Chip resistor 1/8W10kΩ	3
R 139,206,306 939	116-1041-10	Chip resistor 1/8W100kΩ	4
R917	116-1051-10	Chip resistor 1/8W1MΩ	1
R143	116-1821-10	Chip resistor 1/8W1.8kΩ	1
R516,616	116-1831-10	Chip resistor 1/8W18kΩ	2
R132	116-2201-10	Chip resistor 1/8W22Ω	1
R 502,602,701 811,831	116-2231-10	Chip resistor 1/8W22kΩ	5
R504,604	116-2721-10	Chip resistor 1/8W2.7kΩ	2
R 103,501,601 942	116-2731-10	Chip resistor 1/8W27kΩ	4
R111	116-3321-10	Chip resistor 1/8W3.3kΩ	1
R 404,509,607 716,938	116-3331-10	Chip resistor 1/8W33kΩ	5
R116,150	116-3931-10	Chip resistor 1/8W39kΩ	2
R151	116-4721-10	Chip resistor 1/8W4.7kΩ	1
R 203,303,707 918,919,920 921	116-4731-10	Chip resistor 1/8W47kΩ	7
R712	116-5621-10	Chip resistor 1/8W5.6kΩ	1
R405,720	116-5641-10	Chip resistor 1/8W560kΩ	2
R832	116-6811-10	Chip resistor 1/8W680Ω	1

REF.NO.	PART NO.	DESCRIPTION	Q'TY
R205,305	116-6821-10	Chip resistor 1/8W6.8kΩ	2
R503,603	116-8211-10	Chip resistor 1/8W820Ω	2
R963	116-8221-10	Chip resistor 1/8W8.2kΩ	1
C140,904	043-0206-60	Ceramic capacitor 0.01μF	2
C905,906	043-0206-61	Ceramic capacitor 0.1μF	2
C502,503,602 603	160-1012-05	Ceramic capacitor 100pF B HD	4
119,131,512 C516,612,616 902,910	160-1022-05	Ceramic capacitor 1000pF B HD	8
105,111,129 C134,150,802 816,911,912 915	171-1032-06	Ceramic capacitor 0.01μF SR SC	10
C117,118	171-2732-06	Ceramic capacitor 0.027μF SR SC	2
C919	171-4732-06	Ceramic capacitor 0.047μF SR SC	1
C507,607	171-5632-06	Ceramic capacitor 0.056μF SR SC	2
C520,620,806 813	173-1042-10	Polyester capacitor 0.1μF S	4
125 C521~524 621~624	173-1542-10	Polyester capacitor 0.15μF S	9
C133	173-6832-10	Polyester capacitor 0.068μF S	1
122,204,304 C820,821,916 917	174-2200-13	Ceramic capacitor 22pF CH TC	7
C101,102	174-3300-13	Ceramic capacitor 33pF CH TC	2
C104,106,109 128,918,950	177-1032-05	Ceramic chip capacitor 0.01μF HD	6
C702,705,706 707	177-1045-06	Ceramic chip capacitor 0.1μF HD	4
C508,608	177-1532-05	Ceramic chip capacitor 0.015μF HD	2
C126	177-2212-05	Ceramic chip capacitor 220pF HD	1
C115,116,141	177-3332-05	Ceramic chip capacitor 0.033μF HD	3
C504,505,604 605	177-3932-05	Ceramic chip capacitor 0.039μF HD	4
C114	177-4722-05	Ceramic chip capacitor 4700pF HD	1
C123,808	177-4735-06	Ceramic chip capacitor 0.047μF HD	2

REF.NO.	PART NO.	DESCRIPTION	Q'TY
C108	177-6812-05	Ceramic chip capacitor 680pF HD	1
C135,805	179-1063-32	Electrolytic capacitor 16V10μF S	2
C607	179-1073-32	Electrolytic capacitor 16V100μF S	1
C814	179-1073-42	Electrolytic capacitor 25V100μF S	1
C112,132,201 301,801	179-2253-62	Electrolytic capacitor 50V2.2μF S	5
107,113,402 C403,518,618 803,901	179-2273-22	Electrolytic capacitor 10V220μF S	8
C903	179-2273-23	Electrolytic capacitor 10V220μF S	1
C809	179-2273-41	Electrolytic capacitor 25V220μF S	1
C519,619	179-2283-31	Electrolytic capacitor 16V2200μF S	2
401,514,515 C614,615,703 812,914	179-3363-22	Electrolytic capacitor 10V33μF	8
C804	179-3363-32	Electrolytic capacitor 16V33μF S	1
C120	179-4743-62	Electrolytic capacitor 50V0.47μF S	1
C909	179-4753-62	Electrolytic capacitor 50V4.7μF S	1
C921	179-4773-33	Electrolytic capacitor 16V470μF S	1
C913	181-2253-62	Electrolytic capacitor 50V2.2μF LN LL	1
C513,517,613 617	181-3353-62	Electrolytic capacitor 50V3.3μF LN LL	4
C205,305,404 710	182-1063-32	Electrolytic capacitor 16V10μF SS	4
C704,810,811 815	182-1073-22	Electrolytic capacitor 10V100μF SS	4
C202,203,302 303,509,609	182-2253-62	Electrolytic capacitor 50V2.2μF SS	6
C405,406,701	182-2263-12	Electrolytic capacitor 6.3V22μF SS	3
C136	182-4766-12	Electrolytic capacitor 6.3V47μF NP SS	1
103,130,501 C506,510,601 606,610,708 709,908	183-1053-62	Electrolytic capacitor 50V1μF USS	11
C127	183-1543-62	Electrolytic capacitor 50V0.15μF USS	1
C511,611	183-4743-62	Electrolytic capacitor 50V0.47μF USS	2

◎ESCUTCHEON P.W.B

REF.NO.	PART NO.	DESCRIPTION	Q'TY
D922~931	001-0330-00	Diode 1SS119	10
	(001-0294-00)	Diode (1SS133)	
	(001-0352-00)	Diode (1SS176)	

REF.NO.	PART NO.	DESCRIPTION	Q'TY
C925~928	043-0206-36	Ceramic capacitor 100pF	4

NOTE : OM (Oxidized Metal) SS (Super Small)
S (Small) TC (Temperature-Compensating)
HD (Higher Dielectric) LL (Low Leak)
SC (Semi-Conductor) USS (Ultra Super Small)

■PARTS LIST:

◎Tape mechanism section

◎PRE P.W.B SECTION

REF.NO.	PART NO.	DESCRIPTION	Q'TY
IC2	051-0620-00	IC LA2000	1
IC1	051-0714-01	IC TA7705F	1
Q1,2	125-2003-02	Transistor RN1202	2
R5,9	116-1011-10	Chip resistor 1/8W100Ω	2
R13,16	116-1031-10	Chip resistor 1/8W10kΩ	2
R7,11	116-1231-10	Chip resistor 1/8W12kΩ	2
R20	116-1541-10	Chip resistor 1/8W150kΩ	1
R1~4,8,10	116-1831-10	Chip resistor 1/8W18kΩ	6
R12	116-3341-10	Chip resistor 1/8W330kΩ	1

REF.NO.	PART NO.	DESCRIPTION	Q'TY
C15	172-3332-20	Polyester capacitor 0.033μF SS	1
C12	173-4721-10	Polyester capacitor 4700pF S	1
C1~4	173-8211-10	Polyester capacitor 820pF S	4
C6,9	173-1231-10	Polyester capacitor 0.012μF S	2
C14	183-1053-65	Electrolytic capacitor 50V1μF USS	1
C7	183-1063-35	Electrolytic capacitor 16V10μF USS	1
C13	183-4743-62	Electrolytic capacitor 50V0.47μF USS	1
C10,11	183-4753-55	Electrolytic capacitor 35V4.7μF USS	2
C5,8	183-4763-12	Electrolytic capacitor 6.3V47μF USS	2

◎FG P.W.B SECTION

REF.NO.	PART NO.	DESCRIPTION	Q'TY
VR1	012-4745-05	Variable resistor 22kΩ	1
IC3	051-1115-00	IC M51971FP	1
Q4	103-1683-00	Transistor 2SD1683	1
Q3	125-0002-02	Transistor RN2402	1
R21	116-1031-10	Chip resistor 1/8W10kΩ	1
R26	116-1241-10	Chip resistor 1/8W120kΩ	1
R27	116-1511-10	Chip resistor 1/8W150Ω	1
R24	116-2231-10	Chip resistor 1/8W22kΩ	1
R23	116-2241-10	Chip resistor 1/8W220kΩ	1

REF.NO.	PART NO.	DESCRIPTION	Q'TY
R22	116-2711-10	Chip resistor 1/8W270Ω	1
R25	116-5631-10	Chip resistor 1/8W56kΩ	1
C18	042-0239-00	Electrolytic capacitor 16V1μF	1
C21	042-0250-00	Electrolytic capacitor 16V0.33μF	1
C20	043-0291-01	Ceramic capacitor 0.01μF	1
C17	173-3331-10	Polyester capacitor 0.033μF S	1
C19	177-1032-05	Ceramic chip capacitor 0.01μF HD	1
C16	183-3353-62	Electrolytic capacitor 50V3.3μF USS	1

◎BOTTOM P.W.B SECTION

REF.NO.	PART NO.	DESCRIPTION	Q'TY
SW4	013-3862-00	Switch	1
SW1,2	013-3863-00	Switch	2

REF.NO.	PART NO.	DESCRIPTION	Q'TY
SW3	013-3863-01	Switch	1
IC4,5	051-1114-00	IC NJM5161K	2

NOTE : OM (Oxidized Metal) SS (Super Small)
S (Small) TC (Temperature-Compensating)
HD (Higher Dielectric) LL (Low Leak)
SC (Semi-Conductor) USS (Ultra Super Small)

Printed in Japan 298-4124-00 JUL. 1989 ©

■CIRCUIT DIAGRAM: 1/2

Note. ( )·····is PT-9337C-B

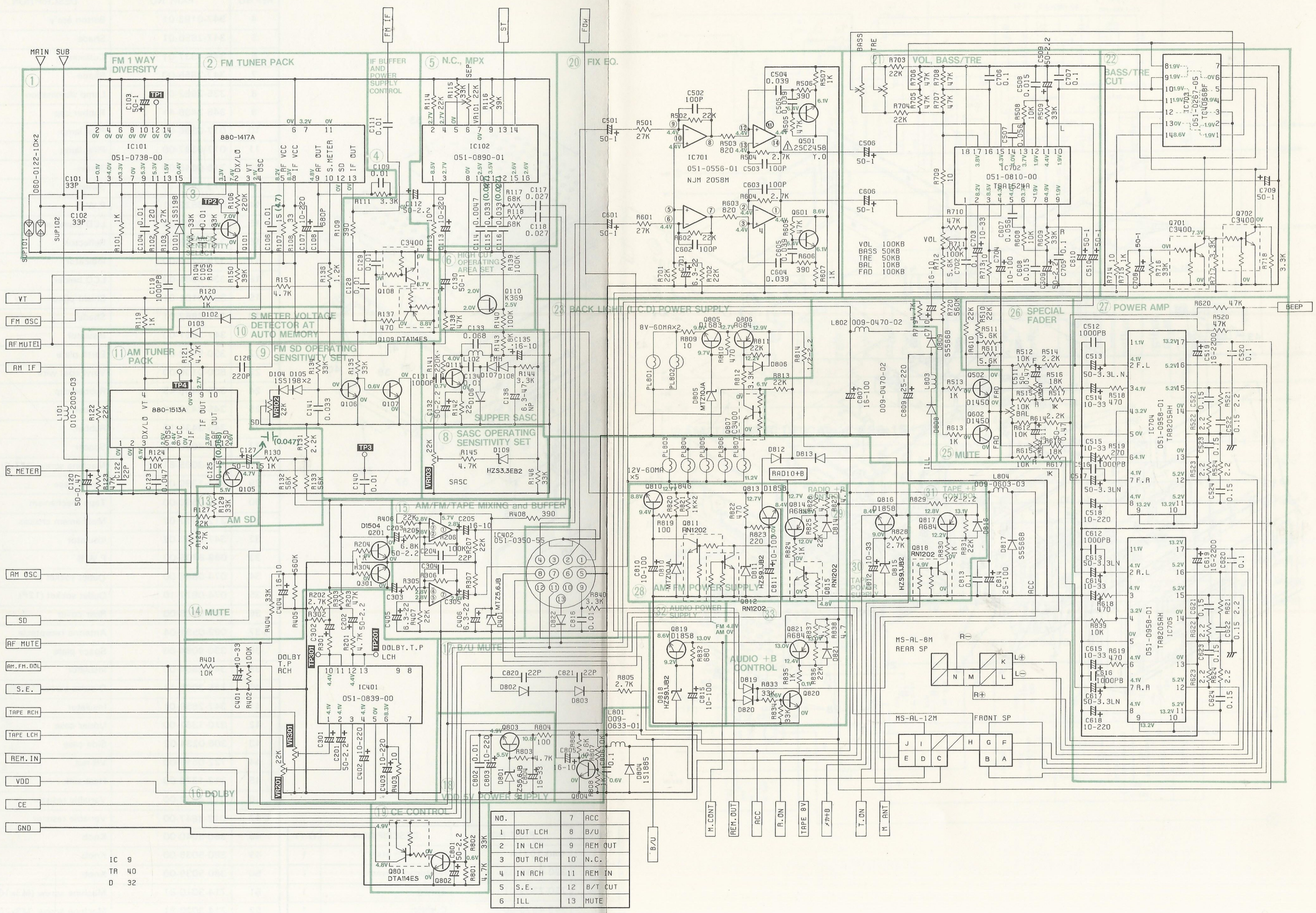

NO.		7	ACC
1	OUT LCH	8	B/U
2	IN LCH	9	REM OUT
3	OUT RCH	10	N.C.
4	IN RCH	11	REM IN
5	S.E.	12	B/T CUT
6	ILL	13	MUTE

IC 9
TR 40
D 32