Clarion

Manufacturer
Clarion Co., Ltd.

Export Division
Clarion Shoji Co., Ltd.
3, Kojimachi 5-chome, Chiyoda-ku, Tokyo, 102 Japan
Tel: 03-265-2931
Telex: J22908, J22152, J25550 CLARISHO

Closer Relations through
"Clarion Service Manual"

Service Manual

Overseas Sales Branch Offices
Clarion Corporation of America 5500 Rosecrans Ave., Lawndale, Calif., 90260 U.S.A. Tel: 213-973-1100 Telex: CLARIONLSA 66-4447
Clarion Corporation of America (Eastern Division) 100 Thirteenth Avenue, Ronkonkoma, New York 11779 U.S.A. Tel: 516-467-1120 Telex: 64-0787
Clarion Shoji (EUROPA) G.m.b.H. Rudolf-Diesel-Strasse 2, 6236 Eschborn 2, West Germany Tel: 06173-61036 Telex: 415414
Clarion (HONG KONG) Co., Ltd. 526, Ocean Centre, Canton Road, Tsimshatsui, Kowloon, Hong Kong Tel: 3-690528 Telex: HX64293 CLAHK
Clarion Canada Inc. 1401 Meyerside Dr. Mississauga, Ontario L5T IG8, Canada Tel: 416-678-1367 Telex: 216968573 CLARION MSGA
Clarion Shoji (U.K.) Ltd. 4-6, Faraday Road, Dorcan Industrial Estate, Dorcan, Swindon, Wiltshire. SN3.5HQ United Kingdom Tel: (0793) 24081 Telex: 44689

Mazda Automobile Genuine Radio with Cassette Stereo

Model PT-9031C

■ SPECIFICATIONS:

[RADIO SECTION]

Circuit system:	Superheterodyne	
Tuning system:	Electronic tuning	
Receive range:	AM	531 to 1,602kHz
	FM	87.9 to 107.9MHz
Intermediate frequency:	AM	450kHz
	FM	10.7MHz
Quieting sensitivity:	AM	Less than 33dB (at 20dB S/N)
	FM	Less than 18dB (at 30dB S/N)
Selectivity:	AM	More than 20dB (at ±10kHz detune)
Separation:	FM	More than 20dB
Fidelity: (Bass, treble = flat)	AM	
	100Hz	−2±4dB
	400Hz	0dB
	4kHz	−16±6dB
	FM	
	100Hz	−2±4dB
	400Hz	0dB
	7kHz	−18±6dB

Auto tuning stop sensitivity:
AM DX 25~45dB FM DX 28~44dB
LO 40~65dB LO 45~75dB

[TAPE SECTION]

Reproduction system:	4 track, 2 channel, 2 program stereo cassette deck
Tape speed:	4.76cm/sec.
Wow & flutter:	Less than 0.23% (W.R.M.S.)
Separation:	More than 35dB
Crosstalk:	More than 40dB
S/N ratio:	
Normal tape (120μS)	42dB/50dB (Dolby NR on)
Metal tape (70μS)	44dB/52dB (Dolby NR on)
FF, REW time:	Less than 120sec. (C-60)

[SYNTHESIS]

Load impedance:	10kΩ
Output level:	300mV (at tape mode, 1kHz 0VU, max. output)
Power supply voltage:	DC 13.2V (10.8V to 15.6V) Negative ground
Current consumption:	Less than 3A (at max. output)

Dimensions:

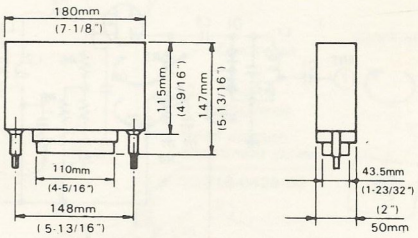

Weight: 1.4kg

- Dolby and the double-D symbol are trademarks of Dolby Laboratories Licensing Corporation.
- Noise Reduction System manufactured under license from Dolby Laboratories Licensing Corporation.

Printed in Japan 298-3091-00 PT-9031C

■ COMPONENT VIEW:

- **PT-9031C-A**

Main unit	1
×2 380-4260-00 Knob (VOL. TUN)	×2 380-4259-00 Knob (BAL, FAD)
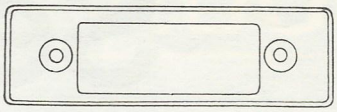 ×1 370-3516-02 Escutcheon	
×2 722-0020-00 Hex nut	×2 745-0524-00 Flat washer

■ TUNER PACK CIRCUIT:

- **AM TUNER PACK**
  941-0115-01

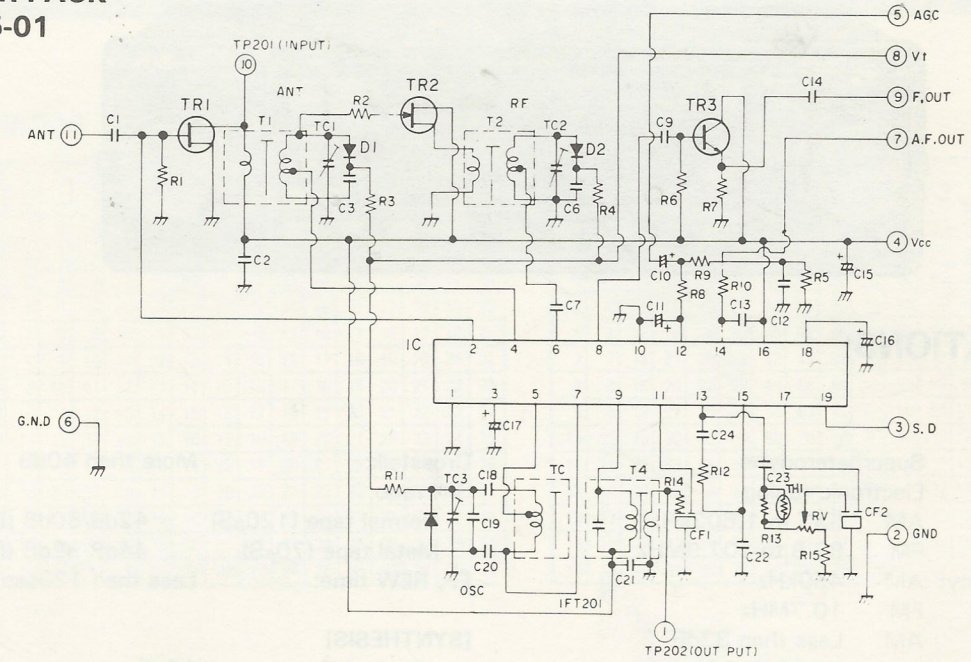

- **FM TUNER PACK**
  941-0116-01

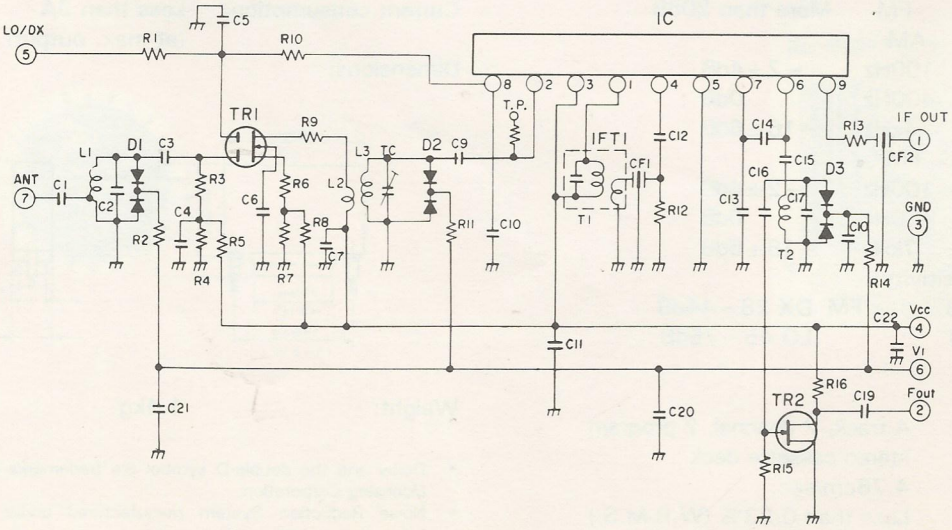

■ ADJUSTMENT:

• Adjustment point

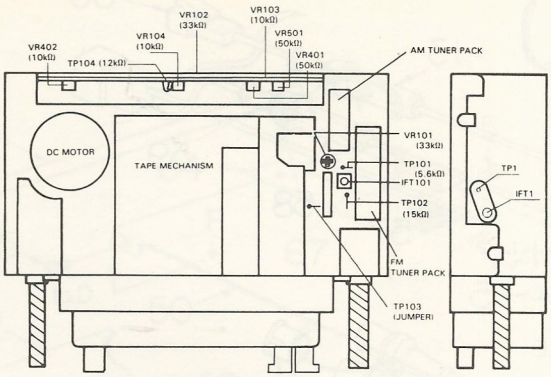

• AM Circuit

•IF •Tracking •Stop trigger	PRE-ADJUSTED TUNER

• FM Circuit

Item		Input	Frequency	Output	Method of adjustment		Instruments required	Remark
S-curve	1	TP1 of tuner pack	10.7MHz	TP103	IFT1 of tuner pack	Adjust the core for waveform having good symmetry and good linearity.	•Sweep generator •Oscilloscope •V.T.V.M.	Marker
	2	Antenna receptacle	98.1MHz, 35 dB	TP101 TP102	IFT101	Adjust for 0 V between TP101&TP102	•Digital voltmeter •S.S.G.	TP101 TP102
Stop trigger			98.1MHz, 35 dB	Pin 7 of IC403	VR101	Adjust for more than 4.0V		
MPX. (V.C.O.)			87.9MHz, 55 dB No modulation	TP104	VR104	Set the oscillator frequency 76kHz using the variable resistor.	•Frequency couter •S.S.G.	
Separation			Right or left signal (400Hz)	Meter across the speaker voice coil.	VR103	Adjust the VR for maximum separation	•MPX stereo SG •S.S.G.	
S.A.S.C.			Set to the specified modulation (30%), assuming an FM SSG output 55dB (98.1MHz) modulation frequency 7kHz.		VR102	• Set the output level 0dBm (=0.775V) using the volume control. • Set the FM SSG output to 40dB and adjust VR so that the output level is 3dB down.	•MPX stereo SG •Oscilloscope •V.T.V.M. •Frequency SG	

• DOLBY NR circuit

Dolby NR level	Connect a millivoltmeter to TP400 and TP500, and insert a 400Hz Dolby level tape into the cassette deck. Adjust semifixed resistors VR401 and VR501 to obtain a meter indication of 0.775(V).
Dolby NR effect	Insert the main tape into the deck, connect a millivoltmeter to left channel Dolby output TP401, apply a 5kHz input signal that provides a meter indication of 59mV to Dolby input TP400, apply the same signal to right channel Dolby input TP500, and connect a millivoltmeter to TP501. Then adjust semifixed resistor VR402 to obtain a meter indication of 8dB or less below 59mV at both the left and right channels when the DOLBY NR SW is turned on and off.

• Tape mechanism

1. Head Azimuth Adjustment

1) Play the test tape (315Hz, −10VU) and adjust the amplifier's volume control and balance control so that the output levels (gains of the playback system) of the left and right channels become equal. (See Fig. 1)
2) Then play the test tape (8kHz, −10VU) and adjust the head azimuth adjusting screw so that the output level in both the forward and reverse directions of play becomes close to the respective peak (maximum output level) point. Then lock the head azimuth adjusting screw.

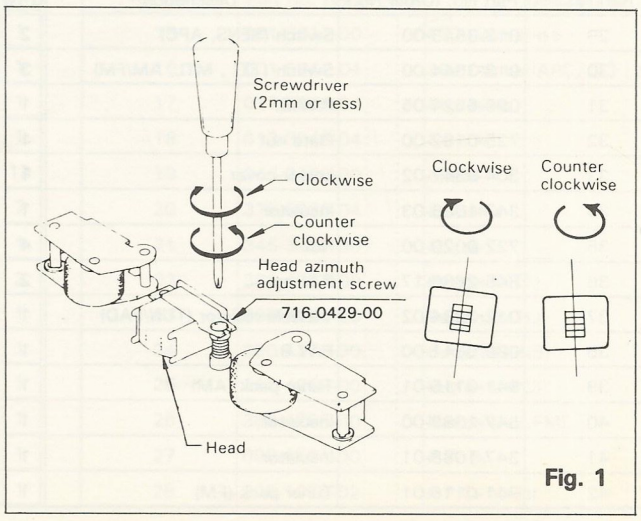

Fig. 1

2. Fast Forward, Rewind Gear Alignment
(See Fig. 2)

- If the mechanism does not operate properly and abnormal sound (gear noise) is produced at the time of fast forward and rewind, first of all check whether the sound is produced during fast forward (FF) or rewinding (REW). If it is produced during FF, adjust by bending the claw (A) to the left or right with radio pliers, etc., and if it is produced during REW, adjust by bending the claw (B) in the same manner. Adjust so that the clearance at this time between the flywheel and FF. REW gear becomes about 0.1 to 0.2mm.
  1) If the gear engagement is loose and the gears produce a large noise, bend the claw away from the center line.

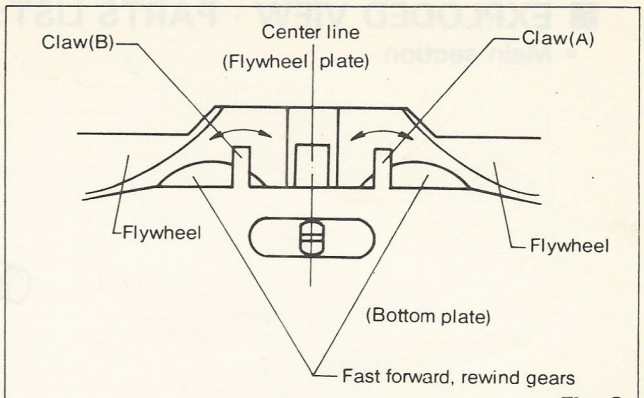

Fig. 2

  2) If the gear engagement is too hard and there is no clearance between the gears, bend the claw toward the center line.

3. Adjustment of Power Switch (See Fig. 3)

- If power does not turn on when pack is inserted (loaded), or if power does not turn off after ejecting the pack, and the underlying cause is found to be misadjustment of the power switch, adjust the switch at proper position by bending upward or downward the adjusting claw of the Guide arm ass'y by means of radio pliers, etc. However, make sure that at the time of ejecting there is a clearance of at least 0.2mm to 0.3mm between the body of the switch and the switch lever.
  1) If power does not turn on when loading pack, adjust by bending the adjusting claw downward.

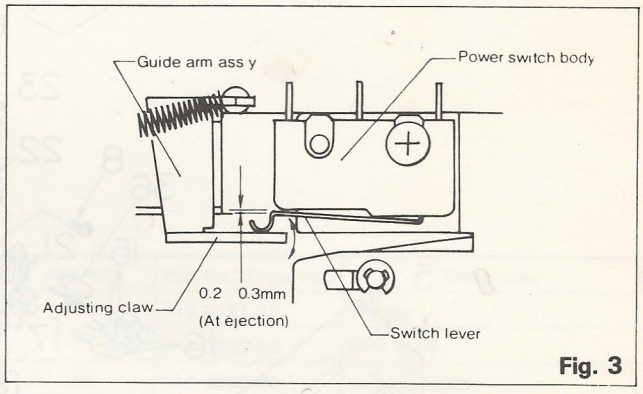

Fig. 3

  2) If power does not turn off when ejecting pack, adjust by bending the adjusting claw upward.

4. Adjustment of Suction Plunger (See Fig. 4)

- If it is not possible to hold the fast forward and rewind operations due to improper position of the plunger, adjust the position of the plunger. To adjust, first load cassette. When cassette is loaded, the holding piece (or core plate) will come near the plunger. Now loosen the machine screws with which the plunger ass'y is fixed, adjust the position of the plunger ass'y so that the holding piece touches the plunger core and comes maximum to the right and fix it there by tightening the machine screws. However, at this time take care of the following matters.
  1) If the plunger core attached to the holding piece is too much separated (lies too much toward the right side), it will not be attracted and thus fast forward and rewind operations will not be held.

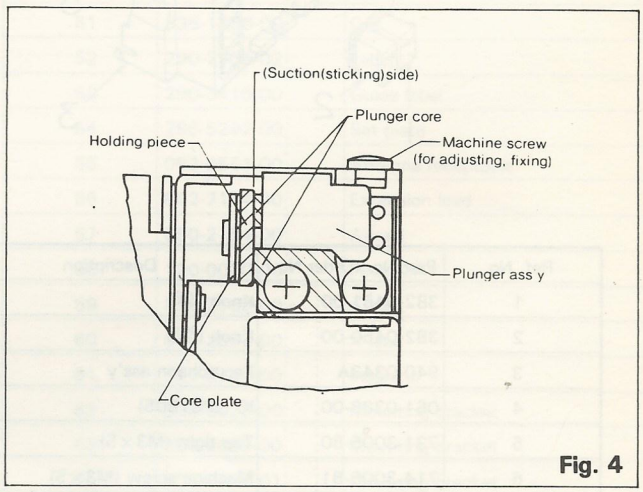

Fig. 4

  2) On the contrary, if it is too much close (lies too much toward the left side), the holding piece will stick but the FF or REW operation will not be held or if held, will get released upon being subjected to shock.

■ PARTS LIST:

• FM-IF/AM TUNER/MAIN CONTROLLER, FM N. C/MPX/PRE-AMP/APC/DOLBY NR P.W.B.

Ref. No.	Part No. (Order No.)	Description	Q'ty
D302, ×5, ×4 314,320, ×1 104,105,106 200,315,317 ×2, ×3,501	001-0112-00	Diode (1S1588)	15
D400,500	001-0180-00	Diode (1S188FM)	2
D100,301	001-0213-05	Diode (HZ9B3)	2
D300	001-0286-00	Diode (HZ11A1)	1
D316,318,319 602,604	001-0276-00	Diode (S5277B)	5
D101,201,202 203,204,205 303,304,305 306,307,308 309,310,311 312,313,401	001-0330-00	Diode (1S119)	18
IFT101	005-0844-00	IF-transformer	1
L304	009-0470-02	Choke	1
L303	009-0603-00	Choke	1
L301	010-1570-01	Coil	1
L302	010-1970-00	Coil	1
L201	010-2053-00	Coil	1
VR402	012-3707-05	Variable resistor (10kΩ)	1
VR104	012-3808-06	Variable resistor (10kΩ)	1
VR101,102	012-3808-08	Variable resistor (33kΩ)	2
VR103	012-3939-05	Variable resistor (10kΩ)	1
VR401,501	012-3939-07	Variable resistor (50kΩ)	2
IC303	051-0118-00	IC (HA11226)	1
IC402,406	051-0259-00	IC (μPC78L05)	2
IC401	051-0281-01	IC (μPB553AC)	1
IC301	051-0301-02	IC (M51522AL)	1
IC404	051-0306-00	IC (TD62105P)	1
IC407	051-0329-00	IC (TD62506P)	1
IC302	051-0362-01	IC (BA336)	1
IC101	051-0363-00	IC (LA1140)	1
IC403	051-0436-00	IC (μPD1701C-014)	1
IC405	051-0388-00	IC (μPC7805H)	1
IC102	051-0407-00	IC (LA2110)	1
IC103	051-0408-00	IC (LA3375)	1
IC201	051-0443-00	IC (TD62504P)	1
X301	061-1037-00	Crystal (4.5MHz)	1
Q305	100-1020-25	Transistor (2SA1020Y)	1
Q304	100-1048-25	Transistor (2SA1048Y)	1
Q300,301	102-1545-02	Transistor (2SC1545B)	2
Q303,602	102-1652-17	Transistor (2SC1652Q)	2
Q600,601,603	102-1815-25	Transistor (2SC1815Y)	3
Q302	102-2021-17	Transistor (2SC2021Q)	1
Q604	102-2785-49	Transistor (2SC2785HF)	1
Q100,308	103-0571-12	Transistor (2SD571L)	2
Q200	103-0655-05	Transistor (2SD655E)	1
Q306,307	108-0161-25	FET (2SK161Y)	2
R105,108	032-0059-49	Film resistor (1/4Ws 5.6kΩ)	2
R132	032-0059-51	Film resistor (1/4Ws 12kΩ)	1
R206	032-0059-50	Film resistor (1/4Ws 8.2kΩ)	1
C138	141-1021-10	Polyester capacitor (50V 0.001μF)	1
C413,513	141-1041-10	Polyester capacitor (50V 0.1μF)	2

Ref. No.	Part No. (Order No.)	Description	Q'ty
C408,423,508 523	141-1531-10	Polyester capacitor (50V 0.015μF)	4
C405,505	141-1833-10	Polyester capacitor (50V 0.018μF)	2
C409,509	141-4721-10	Polyester capacitor (50V 0.0047μF)	2
C403,503	141-8221-10	Polyester capacitor (50V 0.0082μF)	2
C312	160-1012-05	Ceramic capacitor (100pFB)	1
C389,400,500	160-1022-05	Ceramic capacitor (1000pFB)	3
C310	160-2212-05	Ceramic capacitor (220pFB)	1
C116	160-1222-05	Ceramic capacitor (1200pF)	1
C112,119,120 121	160-2712-05	Ceramic capacitor (270pFB)	4
C111,114,115 128,201	160-6812-05	Ceramic capacitor (680pFB)	5
C102,103,104 106,107,109 123,133,194 202,302,308 309,318,606 607,608	171-1033-06	Ceramic capacitor (25V 0.01μF)	17
C127	171-3323-06	Ceramic capacitor (25V 3300pFB)	1
C125	171-2223-06	Ceramic capacitor (25V 2200pF)	1
C200,205,280 300	171-2223-06	Ceramic capacitor (25V 0.022pF)	4
C108,131,132	171-4733-06	Ceramic capacitor (25V 0.047pF)	3
C139,140	171-5633-06	Ceramic capacitor (25V 0.056μF)	2
C118,122,126 141,142	171-6823-06	Ceramic capacitor (25V 6800pF)	5
C313,314	174-2200-13	Ceramic capacitor (22pFCH)	2
C117	174-6800-13	Ceramic capacitor (68pFCH)	1
C101,304,306 402,502	179-1073-22	Electrolytic capacitor (10V 100μF)	5
C320	179-1073-32	Electrolytic capacitor (16V 100μF)	1
C321	179-1083-33	Electrolytic capacitor (16V 1000μF)	1
C305	179-2273-21	Electrolytic capacitor (10V 220μF)	1
C330	179-3363-32	Electrolytic capacitor (16V 33μF)	1
C×2	179-3373-32	Electrolytic capacitor (16V 330μF)	1
C100,130,203	179-4763-22	Electrolytic capacitor (10V 47μF)	3
C311	179-4763-32	Electrolytic capacitor (16V 47μF)	1
C×3	179-4773-22	Electrolytic capacitor (10V 470μF)	1
C×1	179-4773-23	Electrolytic capacitor (10V 470μF)	1
C317	179-4773-33	Electrolytic capacitor (16V 470μF)	1
C307,316,319	180-1064-32	Electrolytic capacitor (16V 10μF)	3
C129	180-1074-32	Electrolytic capacitor (16V 100μF)	1
C206,208,303	181-1053-62	Electrolytic capacitor (50V 1μF)	3
C601	181-3343-62	Electrolytic capacitor (50V 0.33μF)	1
C301	181-2253-62	Electrolytic capacitor (50V 2.2μF)	1
C412,512	182-1043-62	Electrolytic capacitor (50V 0.1μF)	2
C110,113,135 137,199,204 401,413,501 513,600	182-1053-62	Electrolytic capacitor (50V 1μF)	11
C411,511,605 ×5, ×4, ×7	182-1063-32	Electrolytic capacitor (16V 10μF)	6
C700	182-1073-32	Electrolytic capacitor (16V 100μF)	1
C406,506	182-2243-62	Electrolytic capacitor (50V 0.22μF)	2
C134,404,504 604	182-2253-62	Electrolytic capacitor (50V 2.2μF)	4
C124	182-2263-12	Electrolytic capacitor (6.3V 22μF)	1
C407,410,507 510,601,603	182-3343-62	Electrolytic capacitor (50V 0.33μF)	6
C210	182-3363-22	Electrolytic capacitor (10V 33μF)	1
C136	182-4743-62	Electrolytic capacitor (50V 0.47μF)	1
C105,602, ×7	182-4753-52	Electrolytic capacitor (35V 4.7μF)	3

• VOL/BASS/TREB/BAL, P.W.B.

Ref. No.	Part No. (Order No.)	Description	Q'ty
IC304	051-0301-00	IC (M51522L)	1
Q401,501	102-2785-49	Transistor (2SC2785HF)	2
Q402,502	103-0655-05	Transistor (2SD655E)	2
R614	114-2291-52	Film resistor (1W 2.2Ω)	1
C415,417,515 517	171-2233-06	Ceramic capacitor (25V 0.022μF)	4
C416,516	171-6823-06	Ceramic capacitor (25V 0.0068μF)	2

Ref. No.	Part No. (Order No.)	Description	Q'ty
C×8	179-3373-33	Electrolytic capacitor (16V 330μF)	1
C×6	179-4763-32	Electrolytic capacitor (16V 47μF)	1
C609	179-4773-33	Electrolytic capacitor (16V 470μF)	1
C420,520	182-1053-62	Electrolytic capacitor (50V 1μF)	
C414,418,419 421,514,518 519,521	182-1063-32	Electrolytic capacitor (16V 10μF)	8

• FADER P.W.B.

Ref. No.	Part No. (Order No.)	Description	Q'ty
D206,207,208	001-0180-00	Diode (1S 188)	3
Q202	102-2458-28	Transistor (2SC 2458GR)	1
Q201	103-0655-05	Transistor (2SD 655E)	1

Ref. No.	Part No. (Order No.)	Description	Q'ty
Q203	108-0161-25	FET (2SK161Y)	1
C212,214,215 216,217	171-1033-06	Ceramic capacitor (25V 0.01μF)	5
C211,213	180-2264-22	Electrolytic capacitor (10V 22μF)	2

● How to read resistor

Resistors are deleted from the table of electric components, (except metal film resistors and special resistors). They can be converted to product Nos. as follows.

Film resistor (Carbon film resistor)

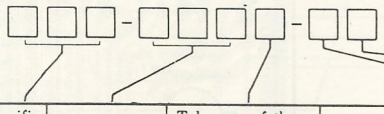

Classification	Resistance *	Tolerance of the value of resistance		Rated power			Shape	
1 1 1		0		0			0	
	Example	1	± 5 %	1	⅛W	Approx. 3.7mm	1	Horizontal
	33Ω=330	2		2	¼Ws	Approx. 6.5mm	2	Vertical
	33kΩ=333	3		3			3	
		4		4	½W	Approx. 9mm	4	
				7	⅙W	Approx. 3.5mm		
				8	½Ws	Approx. 6.6mm		
				9	¼Wss	Approx. 3.2mm		

(Example)

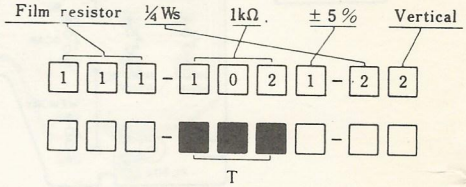

Note 1. The first two of three digits representing resistance are effective digits and the last one represents number of "0" following this.
Unit is given in ohm (Ω).

Example of conversion of resistance T

Note) R : Resistance, T : Converted value

R	T	R	T	R	T	R	T	R	T	R	T	R	T	R	T	R	T	R	T
Ω 0.1	108	Ω 1.0	109	Ω 10	100	Ω 100	101	kΩ 1.0	102	kΩ 10	103	kΩ 100	104	MΩ 1.0	105	MΩ 10	106	MΩ 100	107
0.15	158	1.5	159	15	150	150	151	1.5	152	15	153	150	154	1.5	155	15	156	150	157

COLOR	BLK	BRN	RED	ORG	YEL	GRN	BLU	PUR	GRY	WHT	GOLD	SILVER	NO COLOR
1st color band	0	1	2	3	4	5	6	7	8	9			
2nd color band	0	1	2	3	4	5	6	7	8	9			
3rd color band	10^0	10^1	10^2	10^3	10^4	10^5	10^6				10^{-1}	10^{-2}	
4th color band											± 5 % (J)	±10% (K)	±20% (M)

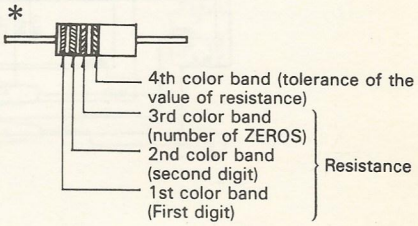

■ EXPLODED VIEW · PARTS LIST:

• **Main section**

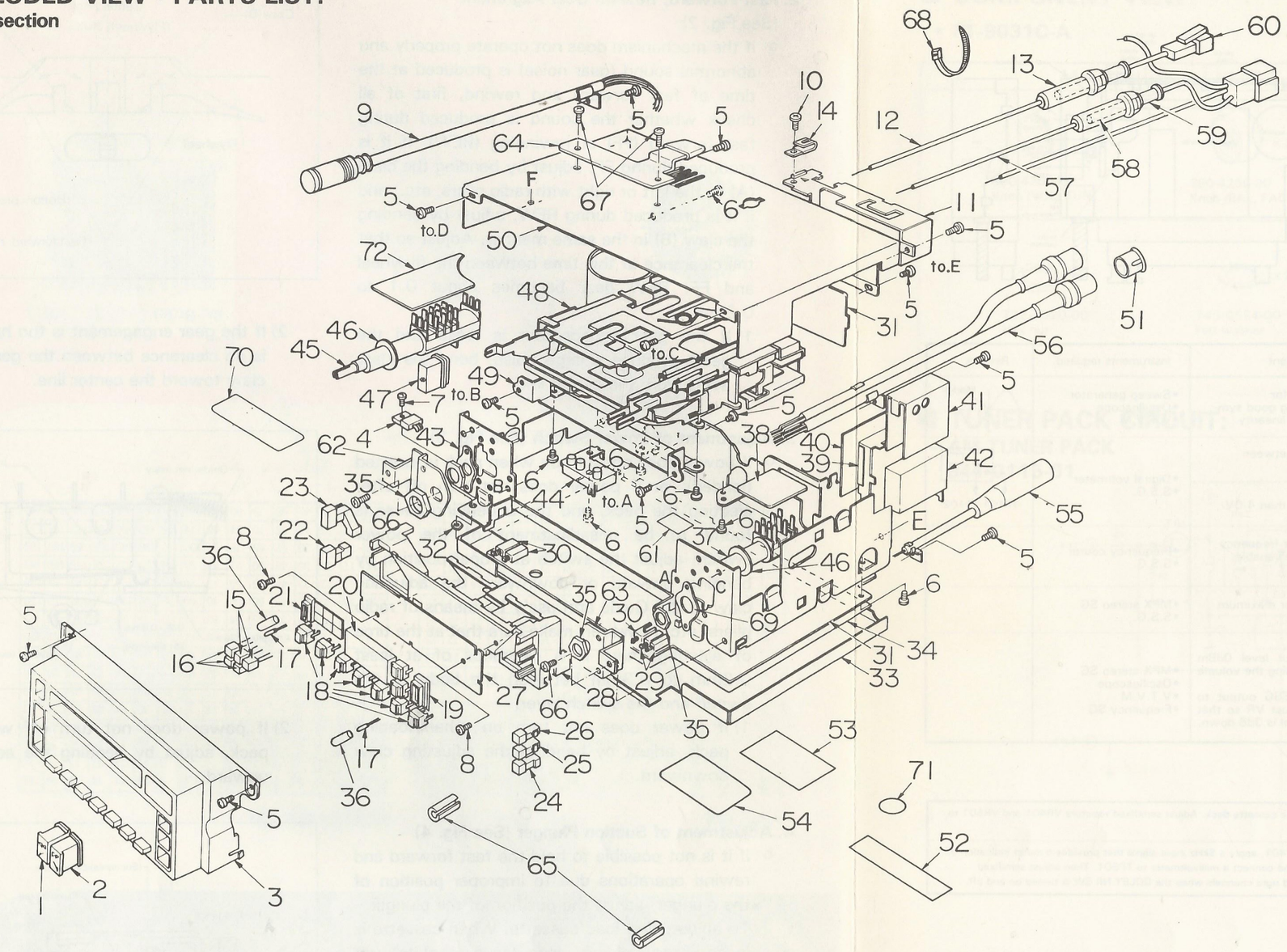

Ref. No.	Part No. (Order No.)	Description	Q'ty
1	382-0451-00	Knob (◁◁)	1
2	382-0450-00	Knob (▷▷)	1
3	940-0343A	Escutcheon ass'y	1
4	051-0388-00	IC (μPC7805)	1
5	731-3005-80	Tap tight (M3×5)	13
6	714-3005-81	Machine screw (M3×5)	7
7	714-3004-81	Machine screw (M3×4)	1
8	704-2005-81	Tap screw (M2×5)	2
9	852-7183-00	Extension lead	1
10	716-0417-00	Screw	1
11	330-7596-00	Connector holder	1
12	850-2166-00	A-lead	1
13	120-0010-00	Fuse (1A)	1
14	321-0871-00	Clip	1

Ref. No.	Part No. (Order No.)	Description	Q'ty
15	001-0312-00	LED (Green/◁▷)	2
16	001-0312-04	LED (Amber/APC, □□, ST)	3
17	017-0349-04	Pilot lamp	2
18	013-3546-04	Switch	9
19	345-3488-00	Shade	1
20	379-0039-04	Indicator	1
21	345-3487-00	Shade	1
22	380-4267-00	Button (□□)	1
23	380-4266-00	Button (MTL)	1
24	380-4270-00	Button (SENS)	1
25	380-4269-00	Button (APC)	1
26	380-4268-00	Button (AM/FM)	1
27	099-6421-00	P.W.B.	1
28	335-1378-02	F.P.C. holder	1

Ref. No.	Part No. (Order No.)	Description	Q'ty
29	013-3643-00	Switch (SENS, APC)	2
30	013-3644-00	Switch (□□, MTL, AM/FM)	3
31	099-6524-05	P.W.B.	1
32	725-0182-00	Plate nut	1
33	304-0347-02	Lower cover	1
34	347-1086-03	Insulator	1
35	722-0020-00	Nut	4
36	345-2830-17	P.L cap	2
37	012-3894-02	Variable resistor (TUN/FAD)	1
38	099-6541-00	P.W.B.	1
39	941-0115-01	Tuner pack (AM)	1
40	347-1089-00	Insulator	1
41	347-1088-01	Insulator	1
42	941-0116-01	Tuner pack (FM)	1

Ref. No.	Part No. (Order No.)	Description	Q'ty
43	312-0221-12	Chassis	1
44	944-0620-02	Filter ass'y	1
45	012-3969-00	Variable resistor	1
46	745-0524-00	Flat washer	2
47	382-0452-01	Button (◁▷)	1
48	930-0501-00	Tape mechanism	1
49	330-7453-01	Tape mechanism bracket	1
50	303-0299-03	Upper cover	1
51	335-1456-00	Cap	1
52	290-2909-02	Label	1
53	290-3410-00	Guide label	1
54	286-5292-00	Set plate	1
55	092-0551-00	Antenna receptacle	1
56	852-7184-00	Extension lead	1
57	850-2164-00	A-lead	1
58	120-0030-00	Fuse (3A)	1
59	850-2165-00	A-lead	1
60	850-2093-00	A-lead	1
61	347-0740-00	Insulator	1
62	300-6628-00	Mounting bracket	1
63	300-6629-00	Mounting bracket	1
64	300-6580-01	Mounting bracket	1
65	335-1481-00	Spacer	2
66	731-3005-80	Tap tight (M3×5)	2
67	714-3005-81	Machine screw (M3×5)	2
68	335-0833-01	Clamp	2
69	330-7421-00	Adjustable plate	2
70	290-3624-00	Label	1
71	290-2438-05	Label	1
72	099-6627-02	P.W.B.	1

■ EXPLODED VIEW:

• Mechanism section

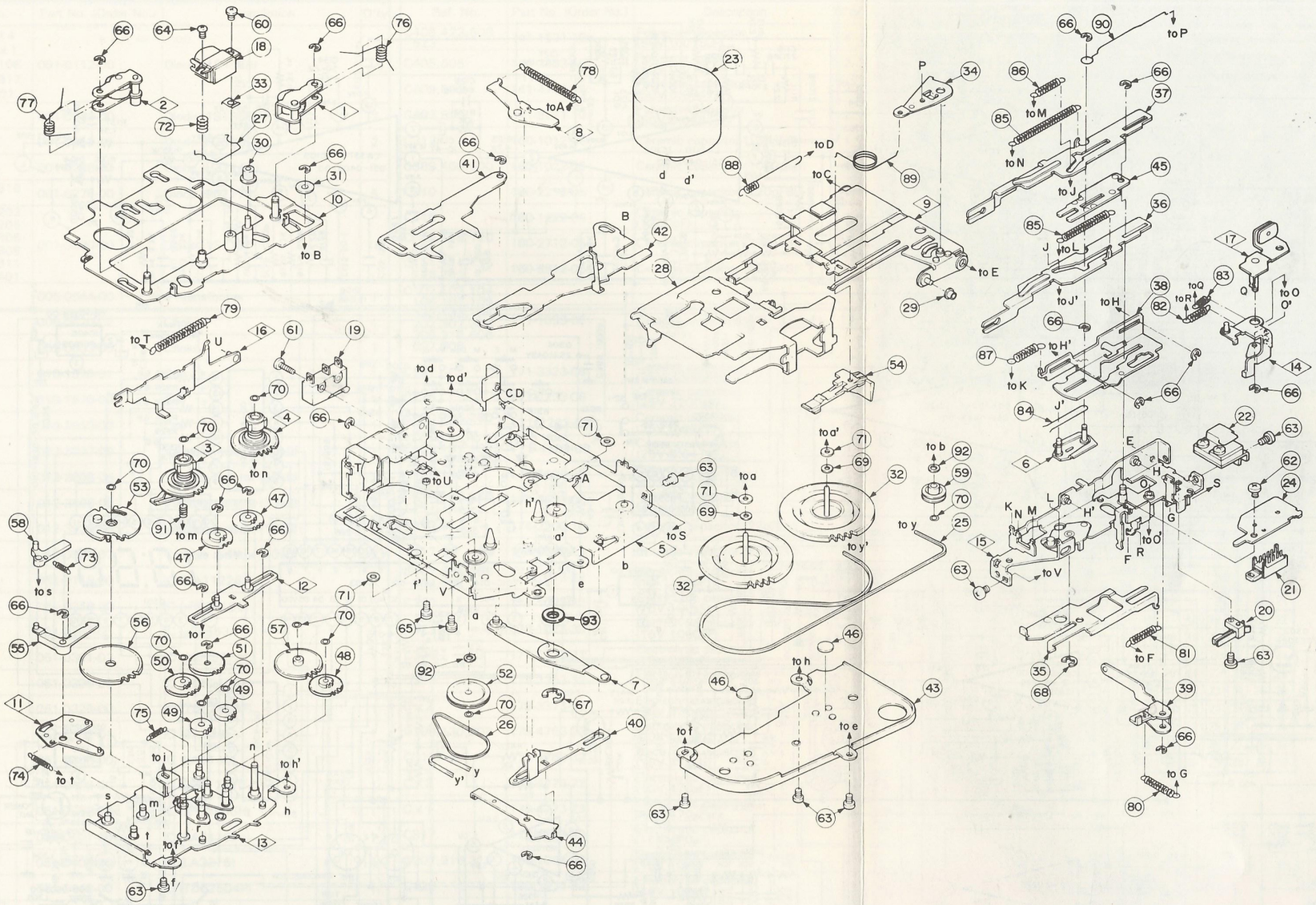

Ref. No.	Part No. (Order No.)	Description	Q'ty
80	750-2141-00	Spring	1
81	750-2142-02	Spring	1
82	750-2144-00	Spring	1
83	750-2145-01	Spring	1
84	750-2199-00	Spring	1
85	750-2147-01	Spring	2
86	750-2148-00	Spring	1
87	750-2149-01	Spring	1
88	750-2150-00	Spring	1
89	750-2151-02	Spring	1
90	750-2152-01	Spring	1
91	750-2155-00	Spring	1
92	746-0624-00	Washer	2
93	745-0640-00	Washer	1

Ref. No.	Part No. (Order No.)	Description	Q'ty
67	743-4000-10	E-ring	1
68	744-0006-01	E-ring	1
69	746-0617-00	Washer	2
70	746-0628-01	Washer	10
71	746-0688-01	Washer	4
72	750-1910-00	Spring	1
73	750-2134-00	Spring	1
74	750-2135-01	Spring	1
75	750-2136-02	Spring	1
76	750-2137-01	Spring	1
77	750-2138-01	Spring	1
78	750-2139-00	Spring	1
79	750-2140-02	Spring	1

Ref. No.	Part No. (Order No.)	Description	Q'ty
54	631-0360-01	Pack stopper	1
55	631-0361-00	Lock link	1
56	631-0362-01	Cam gear	1
57	631-0363-02	Gear-A	1
58	631-0364-02	Sub lock link	1
59	631-0370-00	Tension pulley	1
60	714-2003-81	Machine screw (M2 × 3)	1
61	714-2308-81	Machine screw (M2.3 × 8)	1
62	716-0485-00	Screw	1
63	714-2604-81	Machine screw (M2.6 × 4)	8
64	716-0429-00	Screw (for Head azimuth)	1
65	732-2604-11	Sems screw (M2.6 × 4)	2
66	743-1500-10	E-ring	19

■ PARTS LIST:

• Mechanism section

Ref. No.	Part No. (Order No.)	Description	Q'ty
1	960-3321-02	Roller F ass'y	1
2	960-3322-02	Roller R ass'y	1
3	960-3323-01	Reel base ass'y	1
4	960-3324-01	Reel base ass'y	1
5	960-3325-08	Deck plate ass'y	1
6	960-3327-01	Spring H ass'y	1
7	960-3328-02	Coupling P ass'y	1
8	960-3329-01	Link ass'y	1
9	960-3330-02	Guide arm ass'y	1
10	960-3331-04	Head plate ass'y	1
11	960-3332-03	Check P-B ass'y	1
12	960-3333-00	FF plate ass'y	1
13	960-3334-04	Bottom P ass'y	1
14	960-3336-02	Lock plate ass'y	1
15	960-3337-05	Frame ass'y	1
16	960-3338-02	Program lever ass'y	1
17	960-3340-02	Core plate ass'y	1
18	011-0274-00	Head	1
19	013-2690-03	Switch	1
20	013-3470-07	Switch	1
21	013-3646-00	Switch	1
22	015-0227-06	Plunger	1
23	960-3522-00	D.C. motor ass'y	1
24	099-6334-03	P.W.B.	1
25	602-0068-00	Belt-A	1
26	602-0069-00	Belt-B	1
27	750-2156-00	Spring	1
28	606-0071-02	Pack guide	1
29	610-0080-00	Roller	1
30	610-0101-01	Roller-A	1
31	610-0104-02	Roller	1
32	611-0062-00	Flywheel	2
33	630-1279-00	Spacer	1
34	630-1394-00	Swing plate	1
35	630-1400-03	Off plate-B	1
36	630-1401-03	FF lever-A	1
37	630-1403-03	REW lever	1
38	630-1404-02	Eject plate	1
39	630-1405-00	Off arm	1
40	630-1407-02	FF plate-B	1
41	630-1410-00	Power plate	1
42	630-1411-02	Change plate	1
43	630-1415-01	Flywheel plate	1
44	630-1420-00	FF link	1
45	630-1422-01	Hold plate	1
46	631-0293-00	Thrust washer	2
47	631-0353-00	FF-REW gear	2
48	631-0354-01	Gear-B	1
49	631-0355-01	Play idler gear	2
50	631-0356-00	Gear-R	1
51	631-0357-00	Gear-F	1
52	631-0358-02	Gear pulley	1
53	960-3506-01	Power gear ass'y	1

■ CIRCUIT DIAGRAM:

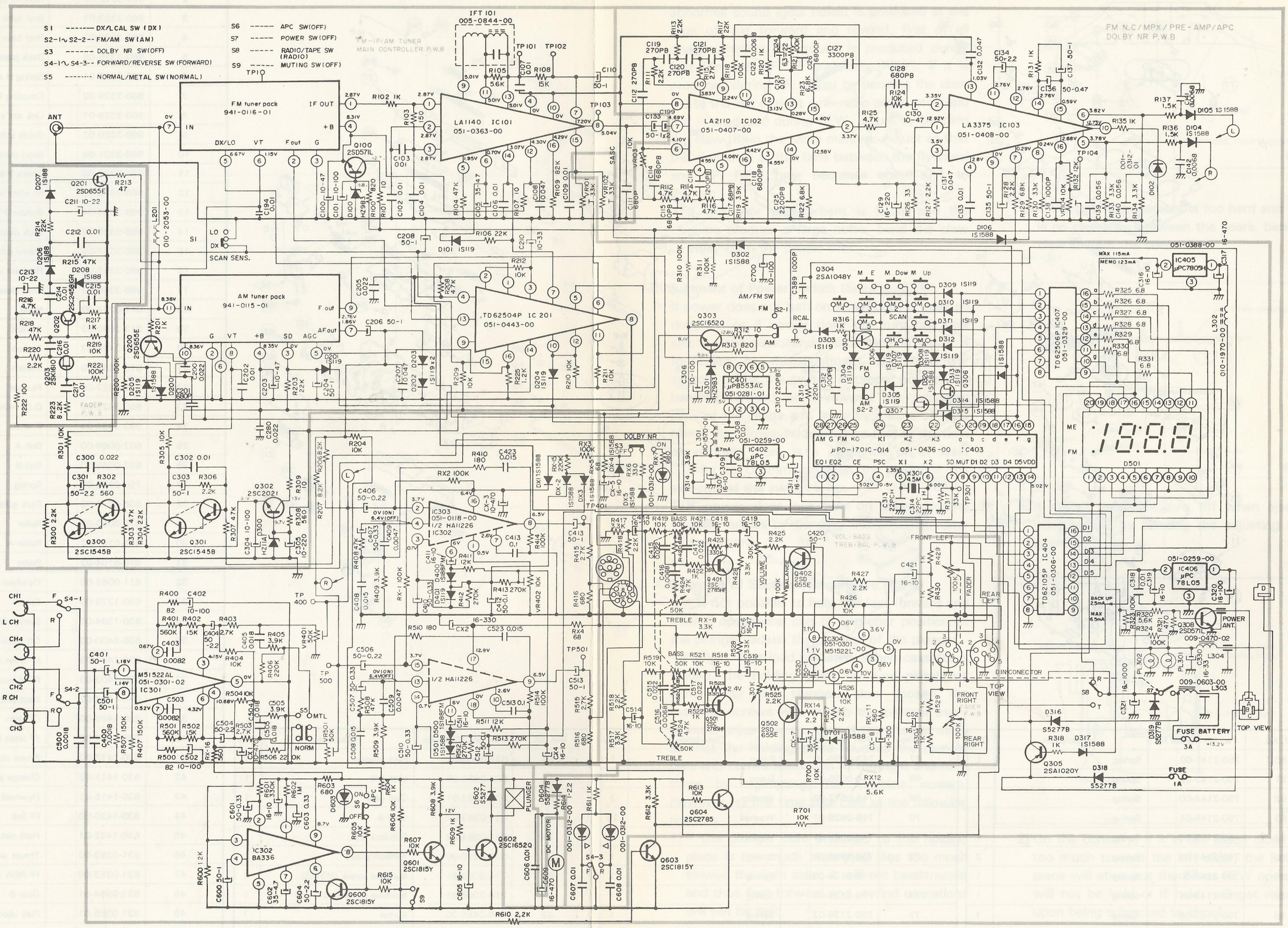
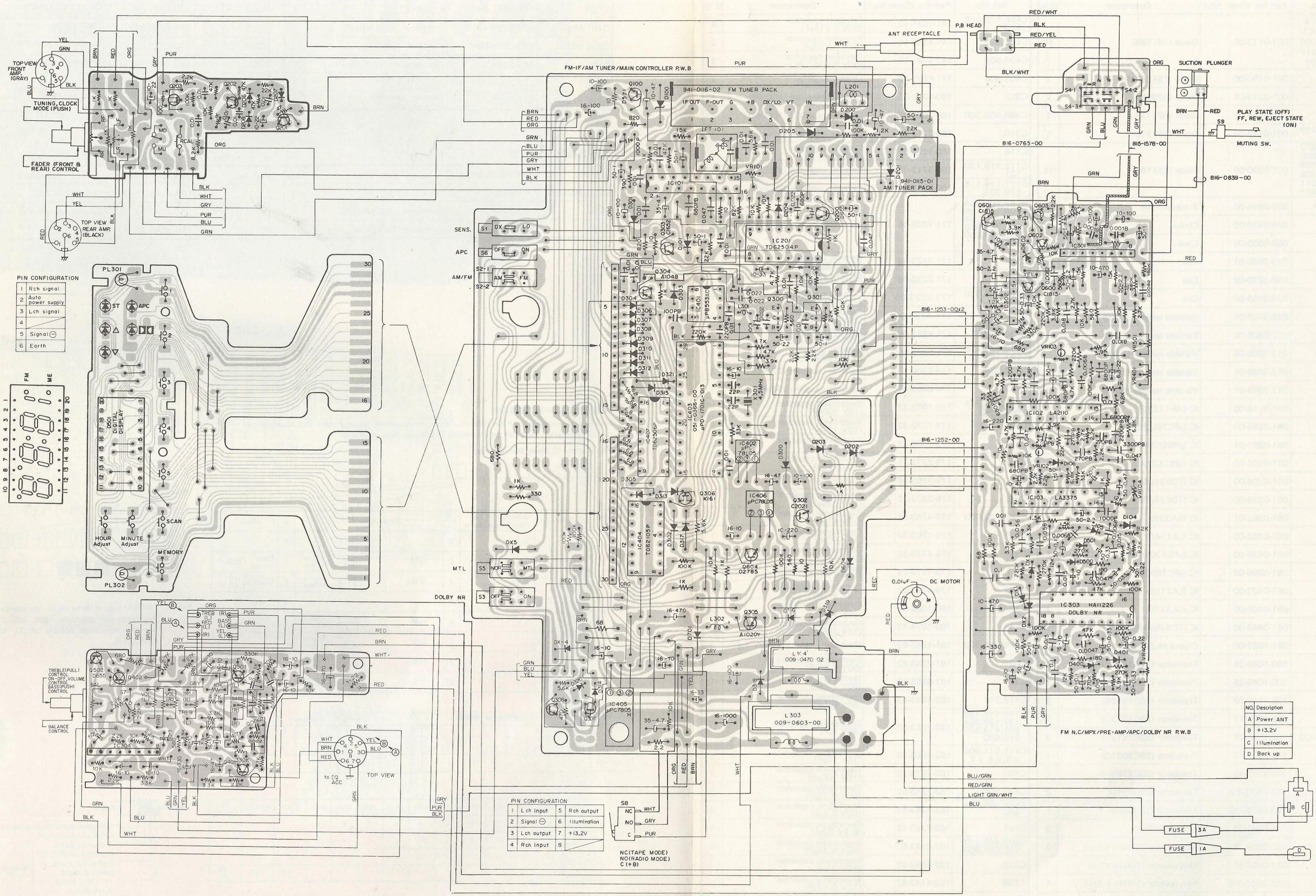
■ PRINTED WIRING BOARD: