(3)

Clarion

Clarion Co., Ltd.
Export Division – 3, Kojimachi 5-chome, Chiyoda-ku, Tokyo, 102 Japan Tel: 03-265-2931
Telex: J22908, J22152, J25550 CLARISHO
Service Dept. – 50 Kamitoda, Toda-shi, Saitama, 335 Japan Tel: 0484-43-1111 Telex: J2962628 CLAFAC-J

Closer Relations through
"Clarion Service Manual"

Service Manual

Overseas Sales Branch Offices
Clarion Corporation of America 5500 Rosecrans Ave., Lawndale, Calif., 90260 U.S.A. Tel: 213-973-1100 Telex: CLARIONLSA 66-4447
Clarion Corporation of America (Eastern Division) 100 Thirteenth Avenue, Ronkonkoma, New York 11779 U.S.A. Tel: 516-467-1120 Telex: 64-0787
Clarion Shoji (EUROPA) G.m.b.H. Rudolf-Diesel-Strasse 2, 6236 Eschborn 2, West Germany Tel: 06173-61036 Telex: 415414
Clarion (HONG KONG) Co., Ltd. 526, Ocean Centre, Canton Road, Tsimshatsui, Kowloon, Hong Kong Tel: 3-690528 Telex: HX64293 CLAHK
Clarion Canada Inc. 1401 Meyerside Dr. Mississauga, Ontario L5T IG8, Canada Tel: 416-678-1367 Telex: 216968573 CLARION MSGA
Clarion Shoji (U.K.) Ltd. 4-6, Faraday Road, Dorcan Industrial Estate, Dorcan, Swindon, Wiltshire, SN3.5HQ United Kingdom Tel: (0793) 24081 Telex: 44689

MAZDA Automobile Genuine Stereo Cassette Deck

Model PT-8051C·F

■SPECIFICATIONS:

Reproduction system:	4 track, 2 channel stereo playback
Tape speed:	4.76cm/sec.
Wow & flutter:	Less than 0.15% (W.R.M.S)
Separation:	More than 30dB
Crosstalk:	More than 40dB
S/N ratio:	
NORM DOLBY NR OFF	More than 46dB
NORM DOLBY NR ON	More than 54dB
METAL DOLBY NR OFF	More than 48dB
METAL DOLBY NR ON	More than 56dB
FF/REW time:	Less than 90sec.
Output level:	185mV ± 1.5dB (315Hz, 0VU Tape 10kΩ load)
Power supply voltage:	DC 13.2V
Current consumption:	Less than 5A (at max. output)
Dimensions:	Width 180mm Height 50mm Depth 160mm
Weight:	1.27kg

⊙ Dolby and the double-D symbol are trademarks of Dolby Laboratories Licensing Corporation.
⊙ Noise Reduction System manufactured under license from Dolby Laboratories Licensing Corporation.

■COMPONENT:

- **PT-8051C-A, F-A**
  Main unit 1

■ADJUSTMENT:

1. ADJUSTING DOLBY LEVEL

Play the test tape CTT-422-112 (400Hz, 200 nWb/m) and adjust VR101 and VR201 so that the voltage at TP101 and TP201 becomes 300mV ± 1dB.

■TAPE MECHANISM

1. AZIMUTH ADJUSTMENT

Play the 8kHz, −10VU section of the AZIMUTH tape and adjust the head azimuth adjustment screw (716-0429-00) so that the output levels are maximized in both tape running directions. (Figure 2-1)

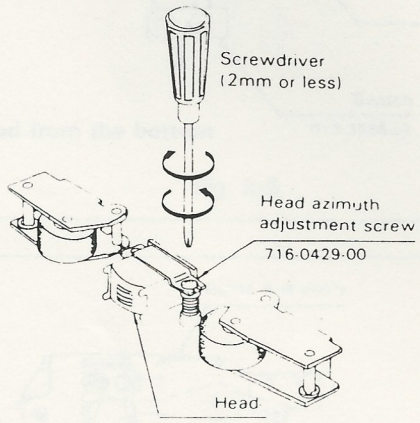

Fig. 2-1

2. REEL BASE TORQUE ADJUSTMENT

The plate spring (brass) which applies torque to each reel base can be seen through the hole in the deck plate around each reel shaft. (Figure 2-2)

Six sets of 3-level steps are provided on each reel base and torque can be varied by changing the step on which each plate spring foot is placed; Changing it to a lower step decreases torque and changing it to a higher step increases torque.

Among the six feet of the plate spring, one rests a step with stoppers as shwon in Figure 2-3. To adjust torque slightly lift the spring and shift it to auother step with tweezers. Be careful not to lift the spring foot to much, or it may be deformed.

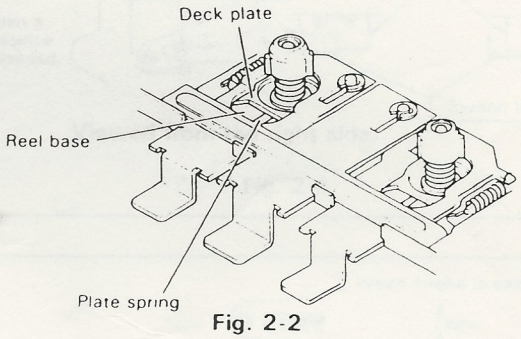

Fig. 2-2

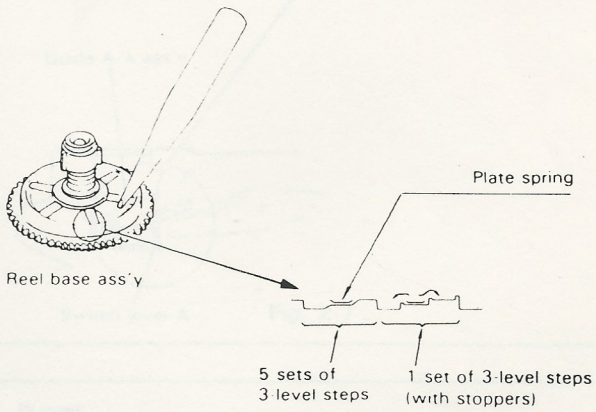

Fig. 2-3

3. FF/REW GEAR ENGAGEMENT ADJUSTMENT

If any abnormal sound is heard during FF/REW operation, adjust gear engagement as follows.

First identify the gear causing the abnormal sound. Then, adjust projection of the base plate assembly by bending it in an appropriate direction as shown in Fig. 2-4; (A) when the REW gear causes abnormal sound; (B) when the FF gear causes abnormal sound.

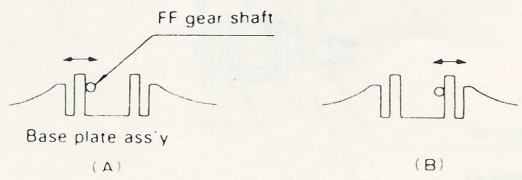

Viewed from the bottom

Fig. 2-4

4. LEAF SWITCH ADJUSTMENT

Adjust the leaf switch gap (t) to 0.5mm by loosening the machine screw (M2×6) las shown in Figure 2-5.

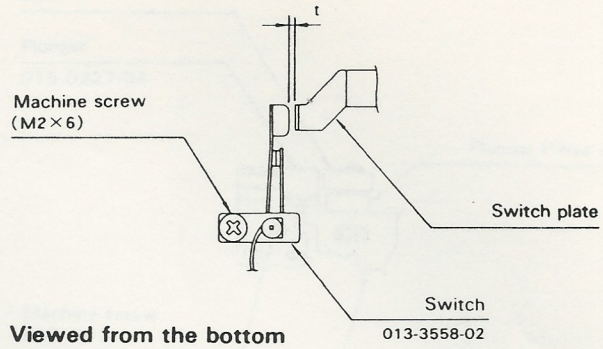

Fig. 2-5

5. POWER SWITCH (MICROSWITCH) ADJUSTMENT

The microswitch is actuated as follows: when a cassette is inserted, the guide A-A assembly drops and the projection on the right side of the A-A assembly pushes switch lever A so that the other end of the switch lever A actuates the microswitch.

When a cassette is loaded, the flat part of switch lever A around the microswitch actuation point (embossed part) must contact the microswitch and must not move any further. (Figure 2-6)

Bend the projection (highlighted part) of the guide A-A assembly in the direction of movement of switch lever A so that the above condition is satisfied. (Figure 2-7)

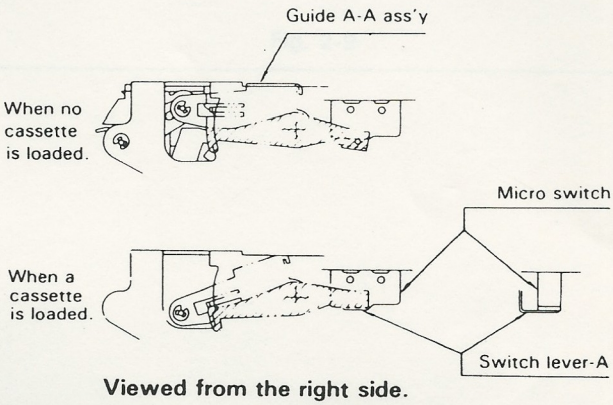

Fig. 2-6

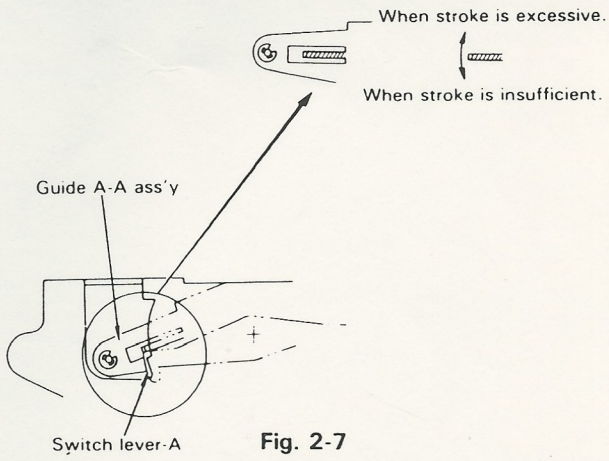

Fig. 2-7

6. HEAD PLATE SLIDING PLUNGER (015-0230-00) ADJUSTMENT

Press the plunger core by hand in the direction indicated with; if the core stroke is insufficient, the lock mechanism of the plunger link will not be released and the cam gear will not move; and, if the core stroke is excessive, the drawing force will be lowered and the core will not be drawn.

Adjust distance t in Figure 2-8 to 1.3 ~ 1.5mm after loosening the machine screw (M2.6×3). After adjustment has been completed, press the core and check whether or not it is returned smoothly by the spring. Apply lock paint to the screw.

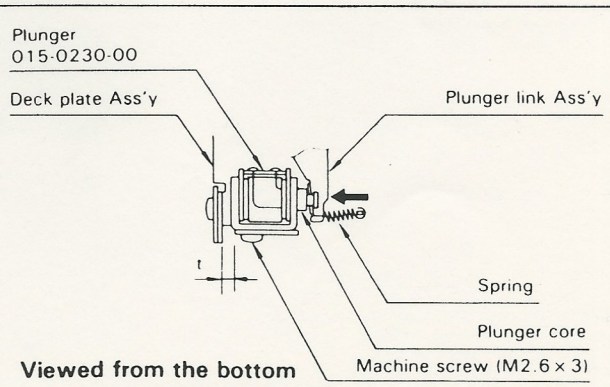

Fig. 2-8

7. HEAD PLATE LATCHING PLUNGER (015-0227-04) ADJUSTMENT

When the gap between the core and plunger is too large, plunger plate B cannot be drawn by the core and head shift operation cannot be performed.

When the gap is too narrow, the head link lock may be reset.

Press the plunger (015-0230-00) core (Figure 2-8), turn the cam a little and adjust the gap so that the core contacts the plunger when the lock arm is all the way to the left after loosening the machine screw (M2.6 × 3). (Figure 2-9)

* Be sure to apply lock paint to the machine screw after plunger adjustment.

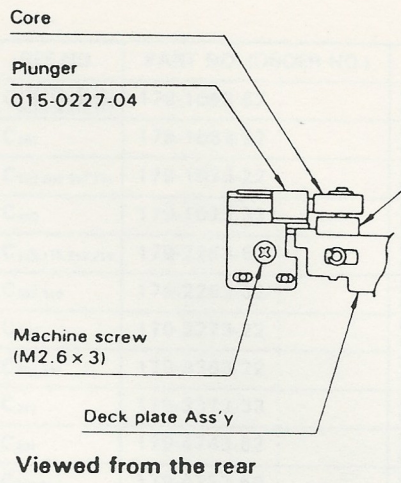

Fig. 2-9

■EXPLANATION OF IC's:

■NJM4558S 051-0285-51 Dual OP. Amp.

Absolute Maximum Ratings

Supply Voltage	V^+/V^-	±18V
Power Dissipation	P_D	500mW

Electrical Characteristics (Ta=25°C, V^+=15V, V^-=−15V)

			min	typ.	max.
Input Offset Voltage	V_{IO}	(Rs≤10kΩ)		0.5	6mV
Input Offset Current	I_{IO}			5	200nA
Input Bias Voltage	I_{IB}			50	500mA
Voltage Gain	Av	(R_L≥2kΩ, Vo=±10V)	20	100	(×10³)
Common Mode Rejection Ratio	CMRR	(Rs≤10kΩ)	70	90	dB
Slew Rate	SR	(R_L≥2kΩ)		1	V/μs

Outward Form

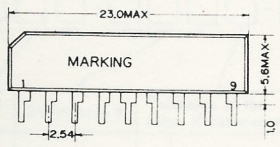

Block Diagram

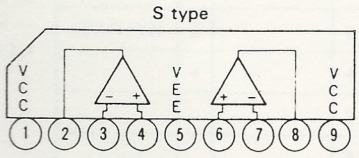

■PARTS LIST:

◎Electrical section

REF.NO.	PART NO. (ORDER NO.)	DESCRIPTION	Q'TY
$D_{302,405}$	001-0360-00	Diode (S5566B)	2
$D_{301,303}$	001-0421-23	Diode (MTZ8.2J)	2
L_{401}	009-0603-00	Choke	1
$VR_{101,201}$	012-4100-06	Variable resistor (50kΩ)	2
IC_3	051-0285-51	IC (NJM4558S)	1
IC_2	051-0507-00	IC (HA12047)	1
IC_1	051-0563-00	IC (BA3406L)	1
$Q_{101,201,302}$	102-1815-00	Transistor (2SC1815)	3
Q_{301}	103-1225-00	Transistor (2SD1225)	1
R_{405}	114-1801-11	Film resistor (1W18Ω) OM	1
$C_{101,201}$	173-1022-10	Polyester capacitor (0.001μF) S	2
$C_{109,209}$	173-1831-10	Polyester capacitor (0.018μF) S	2
$C_{114,214}$	173-3331-10	Polyester capacitor (0.033μF J) S	2
$C_{104,105,204,205}$	173-3332-10	Polyester capacitor (0.033μF) S	4
$C_{118,218}$	173-4712-10	Polyester capacitor (470pF) S	2
$C_{112,212}$	173-4721-10	Polyester capacitor (4700pF) S	2

REF.NO.	PART NO. (ORDER NO.)	DESCRIPTION	Q'TY
$C_{103,106,107,108,116,117,203,206,207,208,216,217}$	179-1053-62	Electrolytic capacitor (50V1μF) S	12
C_{307}	179-1063-32	Electrolytic capacitor (16V10μF) S	1
$C_{102,202,302,304}$	179-1073-22	Electrolytic capacitor (10V100μF) S	4
C_{402}	179-1073-32	Electrolytic capacitor (16V100μF) S	1
$C_{115,119,215,219}$	179-2253-62	Electrolytic capacitor (50V2.2μF) S	4
$C_{306,310}$	179-2263-32	Electrolytic capacitor (16V22μF) S	2
C_{301}	179-2273-22	Electrolytic capacitor (10V220μF) S	1
$C_{303,305}$	179-3363-22	Electrolytic capacitor (10V33μF) S	2
C_{312}	179-3373-33	Electrolytic capacitor (16V330μF) S	1
C_{401}	179-4743-62	Electrolytic capacitor (50V0.47μF) S	1
$C_{113,213}$	179-4753-62	Electrolytic capacitor (50V4.7μF) S	2
$C_{308,309}$	179-4763-22	Electrolytic capacitor (10V47μF) S	2
C_{311}	179-4773-33	Electrolytic capacitor (16V470μF) S	1
$C_{110,210}$	182-2243-62	Electrolytic capacitor (50V0.22μF) SS	2
$C_{111,211}$	183-6843-62	Electrolytic capacitor (50V0.68μF) USS	2

◎Tape mechanism section

REF.NO.	PART NO. (ORDER NO.)	DESCRIPTION	Q'TY
$D_{501,508}$	001-0360-00	Diode (S5566B)	2
$D_{502\sim507}$	001-0330-00	Diode (1SS119)	6
IC_4	051-0403-01	IC (TD6308AP)	1
Q_{501}	100-1020-25	Transistor (2SA1020)	1

REF.NO.	PART NO. (ORDER NO.)	DESCRIPTION	Q'TY
R_{505}	114-2291-51	Film resistor (1W2.2Ω) OM	1
C_{505}	179-4773-33	Electrolytic capacitor (16V470μF) S	1
$C_{501,502,503}$	182-1063-32	Electrolytic capacitor (16V10μF) SS	3
C_{504}	182-4743-62	Electrolytic capacitor (50V0.47μF) SS	1

Note : OM (Oxidized Metal)
S (Small)
HD (Higher Dielectric)
SC (Semi-Conductor)
SS (Super Small)
TC (Temperature-Compensating)
LL (Low Leak)
USS (Ultra Super Small)

● How to read resistor

Resistors are deleted from the table of electric components, (except metal film resistors and special resistors). They can be converted to product Nos. as follows.

Film resistor (Carbon film resistor)

□□□-□□□□-□□

Classification	Resistance*	Tolerance of the value of resistance		Rated power			Shape	
111		0		0			0	
	Example	1	± 5%	1	⅛W	Approx. 3.7mm	1	Horizontal
	33Ω=330	2		2	¼Ws	Approx. 6.5mm	2	Vertical
	33kΩ=333	3		3			3	
		4		4	½W	Approx. 9mm	4	
				7	⅙W	Approx. 3.5mm		
				8	½Ws	Approx. 6.6mm		
				9	¼Wss	Approx. 3.2mm		

(Example)

Film resistor ¼Ws 1kΩ ± 5% Vertical

1 1 1 - 1 0 2 1 - 2 2

■■■ (T)

Note 1. The first two of three digits representing resistance are effective digits and the last one represents number of "0" following this.
Unit is given in ohm (Ω).

Example of conversion of resistance ■■■□ (T)

Note) R : Resistance, T : Converted value

R	T	R	T	R	T	R	T	R	T	R	T	R	T	R	T	R	T	R	T
Ω 0.1	108	Ω 1.0	109	Ω 10	100	Ω 100	101	kΩ 1.0	102	kΩ 10	103	kΩ 100	104	MΩ 1.0	105	MΩ 10	106	MΩ 100	107
0.15	158	1.5	159	15	150	150	151	1.5	152	15	153	150	154	1.5	155	15	156	150	157

COLOR	BLK	BRN	RED	ORG	YEL	GRN	BLU	PUR	GRY	WHT	GOLD	SILVER	NO COLOR
1st color band	0	1	2	3	4	5	6	7	8	9			
2nd color band	0	1	2	3	4	5	6	7	8	9			
3rd color band	10^0	10^1	10^2	10^3	10^4	10^5	10^6				10^{-1}	10^{-2}	
4th color band											± 5% (J)	± 10% (K)	± 20% (M)

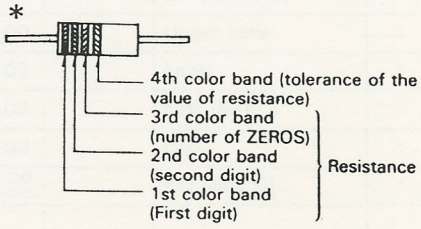

■EXPLODED VIEW • PARTS LIST:

◎Main section

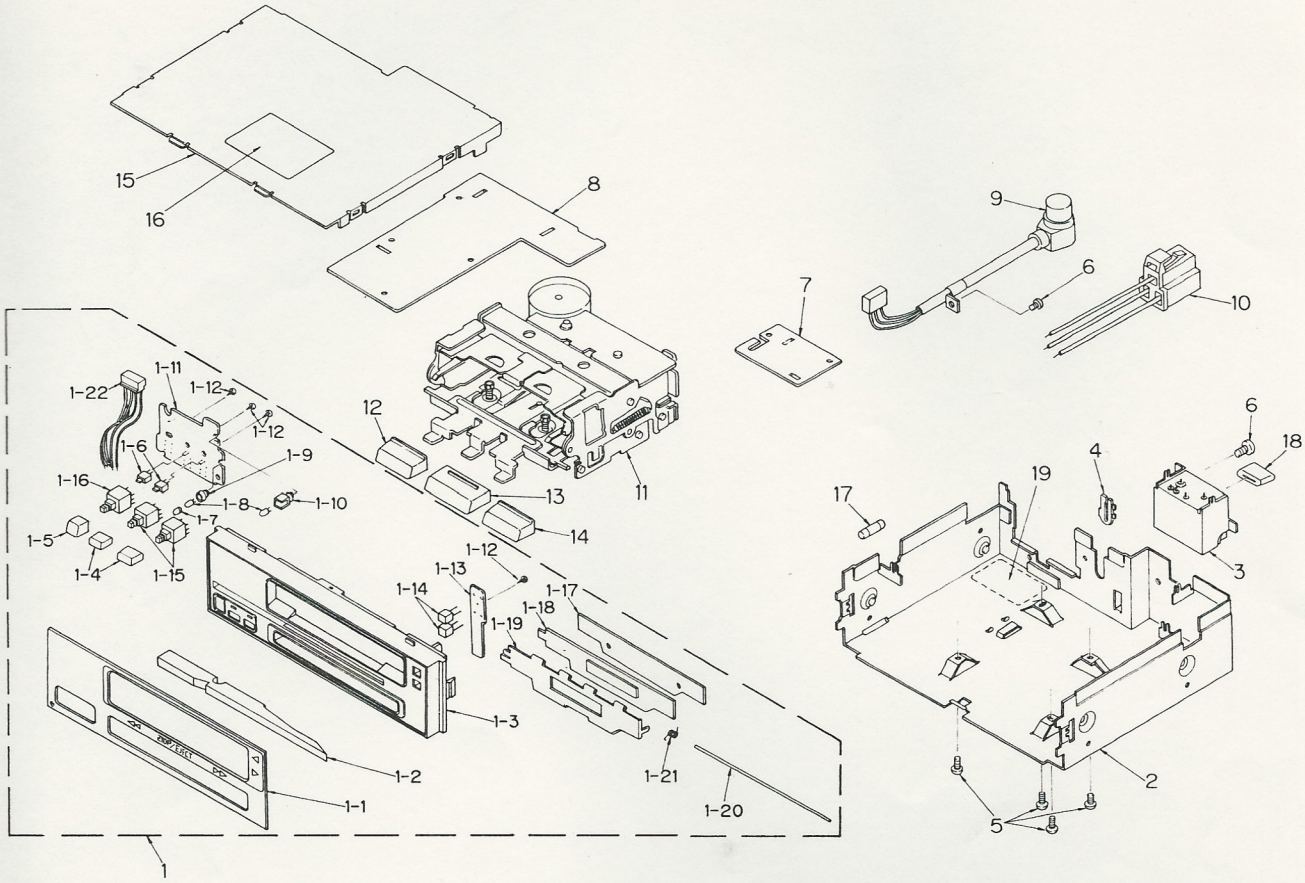

REF.NO.	PART NO. (ORDER NO.)	DESCRIPTION	Q'TY
1	940-0551A (F) 940-0557A (C)	Escutcheon ass'y	1
1-1	371-3303-04 (F) 371-3303-06 (C)	Trim plate	1
1-2	335-2121-01	Reflector	1
1-3	370-3886-00	Escutcheon	1
1-4	382-0927-00	Button (▯▯, MTL)	2
1-5	382-0928-00 (F) 382-0928-01 (C)	Button (PRO)	1
1-6	001-0358-10	LED (▯▯, MTL)	2
1-7	345-2830-67	P.L cap	1
1-8	017-0345-09	Pilot lamp	2
1-9	345-3657-00	P.L holder	1
1-10	345-4091-00	P.L holder	1
1-11	099-7532-00	P.W.B	1
1-12	704-2005-81	Tapping screw (M2x5)	4
1-13	099-7533-00	P.W.B	1
1-14	001-0441-04	LED (◁▷)	2
1-15	013-3648-00	Switch (▯▯, MTL)	2
1-16	013-3648-01	Switch (PRO)	1
1-17	330-8064-00	Back plate	1
1-18	335-2122-00 (F) 335-2122-01 (C)	Reflector	1
1-19	320-0377-00	Dustproof cover	1
1-20	341-1266-00	Door shaft	1

REF.NO.	PART NO. (ORDER NO.)	DESCRIPTION	Q'TY
1-21	750-2307-01	Spring	1
1-22	852-8811-00	Extension lead	1
2	311-1216-02	Lower case	1
3	074-0780-00	Outlet socket	1
4	335-0580-00	Lead holder	1
5	714-3004-81	Machine screw (M3x4)	4
6	731-3005-80	Tap tight (M3x5)	2
7	099-7534-00	P.W.B	1
8	099-7534-00	P.W.B	1
9	852-8820-00	Extension lead (DIN)	1
10	852-8607-00	Extension lead	1
11	930-0480-23	Tape mechanism	1
12	382-0924-00	Button (FF)	1
13	382-0925-00	Button (STOP/EJECT)	1
14	382-0926-00	Button (REW)	1
15	310-1253-00	Upper case	1
16	290-2909-02	Label	1
17	120-0050-02	Fuse (5A)	1
18	345-4182-00	Cap	1
19	286-5700-00 (F) 286-5736-00 (C)	Set plate	1

■EXPLODED VIEW • PARTS LIST:

◎Tape mechanism section

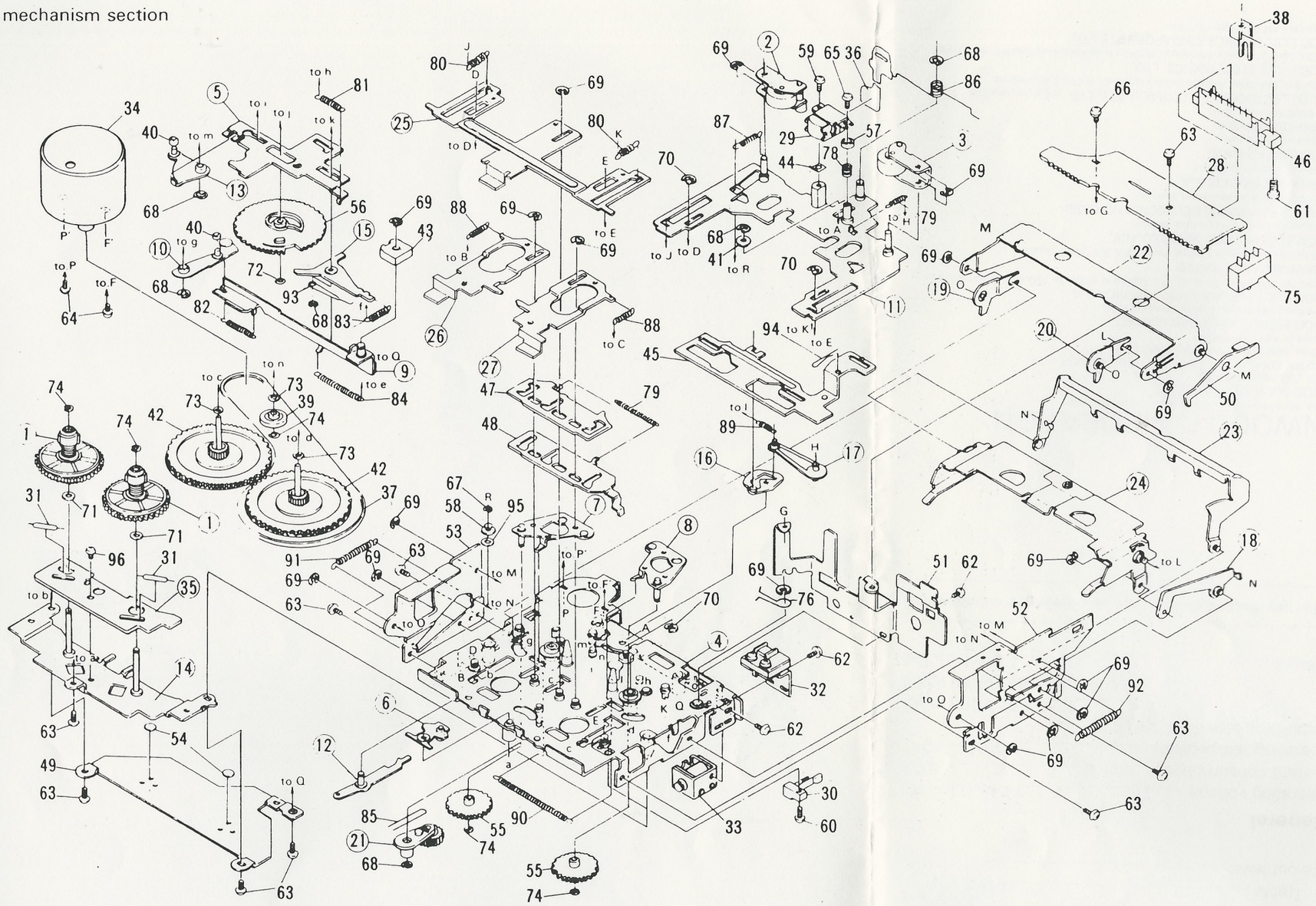

REF.NO.	PART NO. (ORDER NO.)	DESCRIPTION	Q'TY
1	960-3259-05	Reel base ass'y	2
2	960-3260-02	Roller F ass'y	1
3	960-3261-02	Roller R ass'y	1
4	960-3394-08	Deck plate ass'y	1
5	960-3263-03	Power plate ass'y	1
6	960-3264-03	FF plate ass'y	1
7	960-3268-03	Idler P-F ass'y	1
8	960-3269-03	Idler P-R ass'y	1
9	960-3270-09	Plunger P ass'y	1
10	960-3271-05	Lock arm ass'y	1
11	960-3272-11	Head plate ass'y	1
12	960-3273-05	Head link ass'y	1
13	960-3274-05	Power link ass'y	1
14	960-3275-06	Base plate ass'y	1
15	960-3276-02	Plunger link ass'y	1

REF.NO.	PART NO. (ORDER NO.)	DESCRIPTION	Q'TY
16	960-3277-02	Cam ass'y	1
17	960-3278-02	Cam plate ass'y	1
18	960-3280-03	Guide A-B ass'y	1
19	960-3281-01	Eject L-L ass'y	1
20	960-3282-01	Eject L-R ass'y	1
21	960-3283-03	FF gear ass'y	1
22	960-3290-05	Guide A-A ass'y	1
23	960-3291-06	Swing L ass'y	1
24	960-3311-01	Pack guide ass'y	1
25	960-3267-04	Eject lever ass'y	1
26	960-3298-00	FF lever ass'y	1
27	960-3299-00	REW lever ass'y	1
28	099-6226-04	P.W.B	1
29	011-0274-01	Head	1
30	013-3714-00	Switch	1

REF.NO.	PART NO. (ORDER NO.)	DESCRIPTION	Q'TY
31	013-3601-00	Switch	2
32	015-0227-04	Plunger	1
33	015-0230-00	Plunger	1
34	960-3514-00 SMA 101101	Motor ass'y	1
35	099-6206-01	P.W.B	1
36	099-6225-00	P.W.B	1
37	602-0065-01	Belt	1
38	630-1379-01	Switch lever B	1
39	604-0024-00	Tension pulley	1
40	610-0092-00	Roller E	2
41	610-0093-01	Roller C	1
42	611-0061-00	Flywheel	2
43	630-1198-03	Core	1
44	630-1279-00	Plate	1
45	960-3355-01	Change plate ass'y	1

REF.NO.	PART NO. (ORDER NO.)	DESCRIPTION	Q'TY
46	013-3600-06	Switch	1
47	630-1305-05	FF lock	1
48	630-1307-02	Switch plate	1
49	630-1316-02	Bottom plate	1
50	630-1326-02	Switch lever A	1
51	630-1488-02	Support plate	1
52	630-1332-07	Side panel R	1
53	630-1333-04	Side panel L	1
54	631-0314-00	Thrust plate	2
55	631-0343-00	Idler gear	2
56	631-0345-03	Cam gear	1
57	632-0871-00	Spacer	1
58	632-1069-01	Head link roller	1
59	714-2004-81	Machine screw (M2x4)	1
60	714-2006-81	Machine screw (M2x6)	1
61	714-2005-11	Machine screw (M2x5)	1
62	714-2603-81	Machine screw (M2.6x3)	3
63	714-2604-81	Machine screw (M2.6x4)	9
64	716-0347-00	Screw	2
65	716-0429-00	Screw	1
66	735-2605-11	D-sems screw (M2.6x5)	1
67	743-1200-10	E-ring (M1.2)	1
68	743-1500-10	E-ring (M1.5)	6
69	743-2000-10	E-ring (M2)	17
70	743-2500-10	E-ring (M2.5)	3
71	745-0586-00	Washer	2
72	746-0622-01	Washer	1
73	746-0624-00	Washer	3
74	746-0628-01	Washer	5
75	013-3580-00	Switch	1
76	750-2171-00	Spring	1
77	746-0693-00	Washer	1
78	750-1910-00	Spring	1
79	750-2049-00	Spring	2
80	750-2050-00	Spring	2
81	750-2051-00	Spring	1
82	750-2052-03	Spring	1
83	750-2053-01	Spring	1
84	750-2054-01	Spring	1
85	750-2055-01	Spring	1
86	750-2056-03	Spring	1
87	750-2057-02	Spring	1
88	750-2058-00	Spring	2
89	750-2059-01	Spring	1
90	750-2061-01	Spring	1
91	750-2062-00	Spring	1
92	750-2063-02	Spring	1
93	750-2093-02	Spring	1
94	750-2108-03	Spring	1
95	746-0621-00	Washer	1
96	716-0479-00	Screw	1

CIRCUIT DIAGRAM:

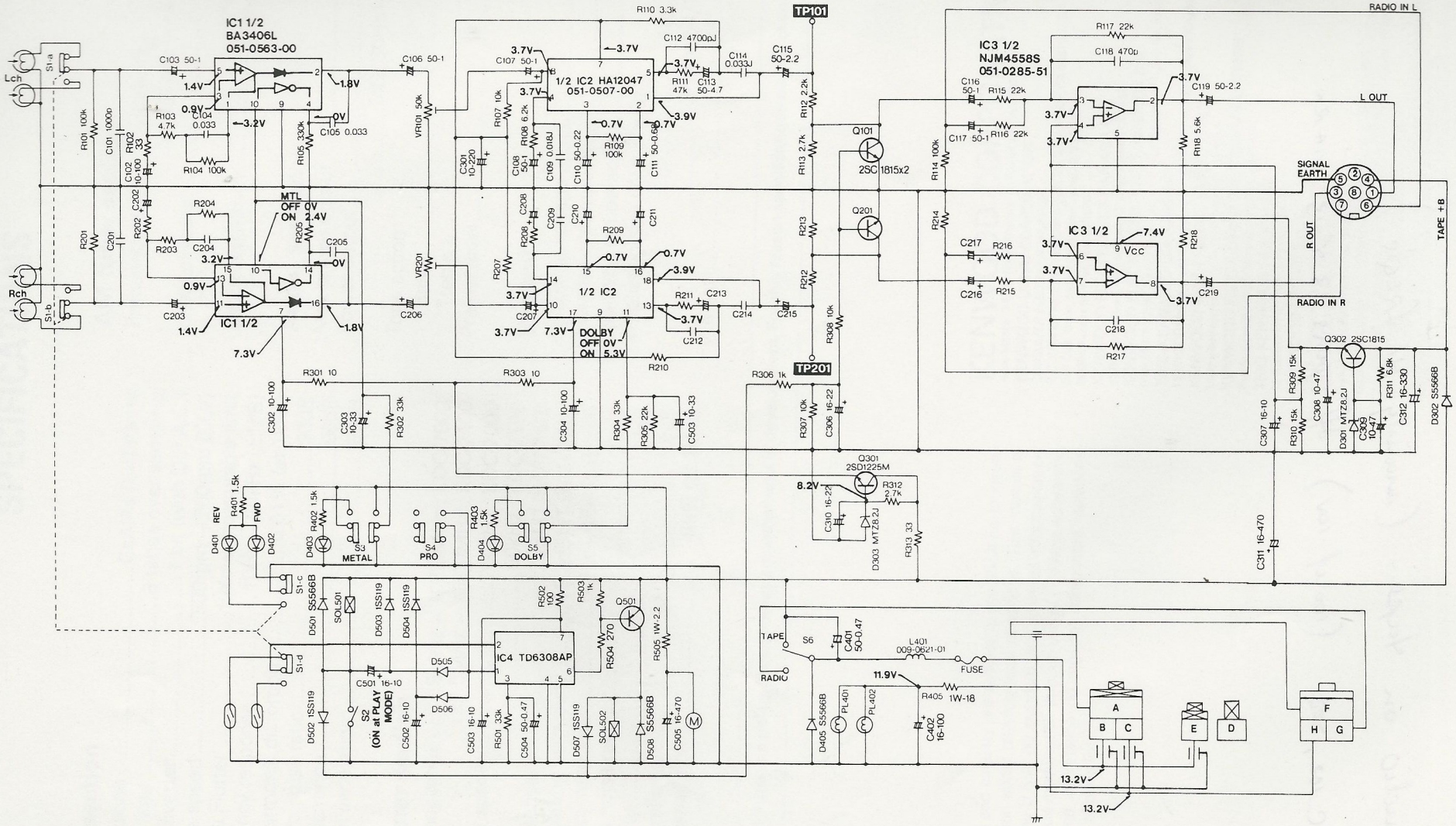

■PRINTED WIRING BOARD:

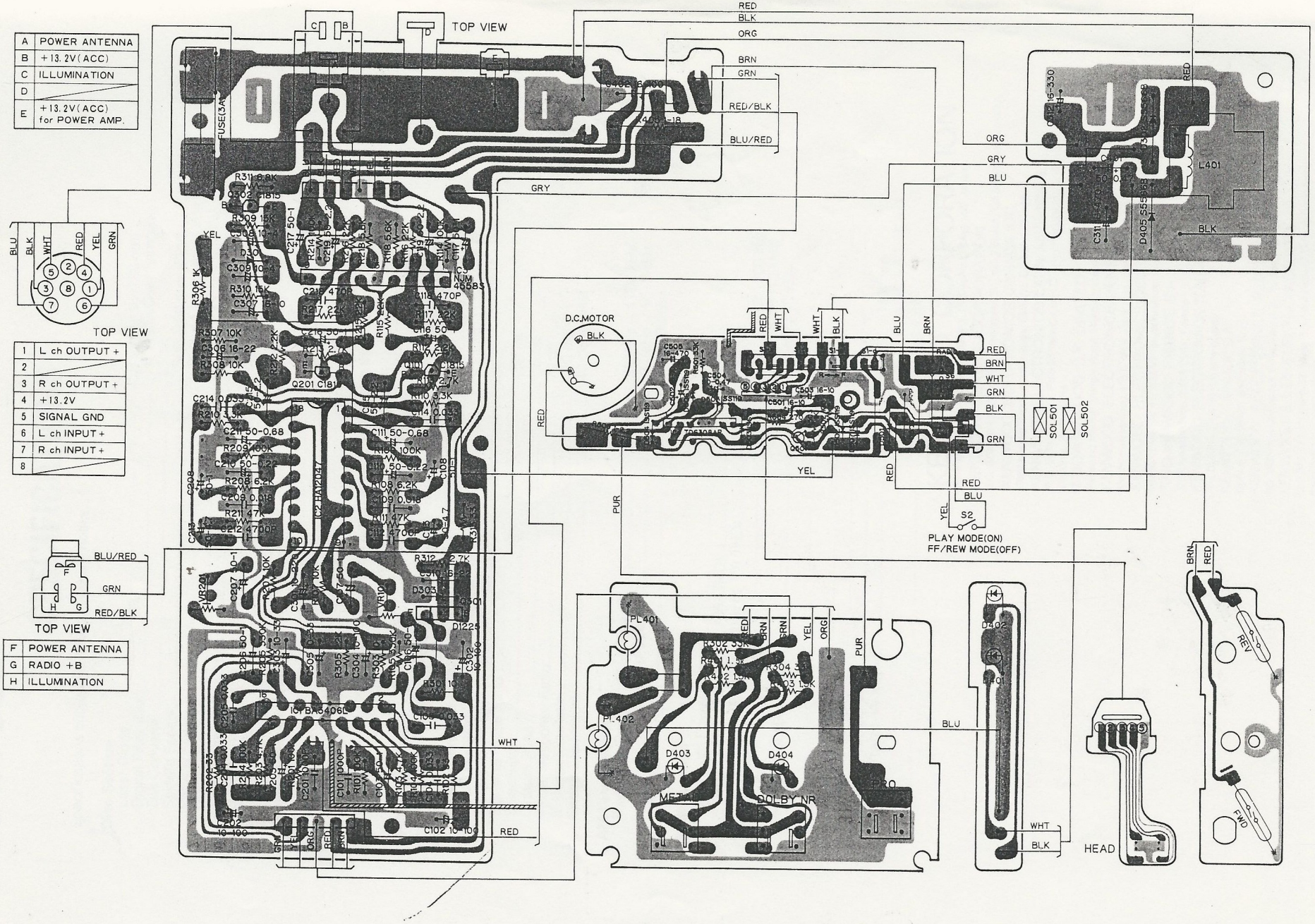

Printed in Japan 298-3299-00 JUL. 1985 ©

low audio on tape - (mainly Hi FREQ's)

Replace C102, 202 (100uf 10V) off pins 3 & 13 via Rx