Clarion

**Clarion Co., Ltd.**
Export Division—3, Kojimachi 5-chome, Chiyoda-ku, Tokyo, 102 Japan Tel: 03-265-2931
Telex: J22908, J22152, J25550 CLARISHO
Service Dept.—50 Kamitoda, Toda-shi, Saitama, 335 Japan Tel: 0484-43-1111 Telex: J2962628 CLAFAC-J

# Service Manual

Closer Relations through
"Clarion Service Manual"

Overseas Sales Branch Offices
**Clarion Corporation of America** 5500 Rosecrans Ave., Lawndale, Calif., 90260 U.S.A. Tel: 213-973-1100 Telex: CLARIONLSA 66-4447
**Clarion Corporation of America (Eastern Division)** 100 Thirteenth Avenue, Ronkonkoma, New York 11779 U.S.A. Tel: 516-467-1120 Telex: 64-0787
**Clarion Shoji (EUROPA) G.m.b.H.** Rudolf-Diesel-Strasse 2, 6236 Eschborn 2, West Germany Tel: 06173-61036 Telex: 415414
**Clarion (HONG KONG) Co., Ltd.** 526, Ocean Centre, Canton Road, Tsimshatsui, Kowloon, Hong Kong Tel: 3-690528 Telex: HX64293 CLAHK
**Clarion Canada Inc.** 1401 Meyerside Dr. Mississauga, Ontario L5T IG8, Canada Tel: 416-678-1367 Telex: 216968573 CLARION MSGA
**Clarion Shoji (U.K.) Ltd.** 4-6, Faraday Road, Dorcan Industrial Estate, Dorcan, Swindon, Wiltshire. SN3.5HQ United Kingdom Tel: (0793) 24081 Telex: 44689

## MAZDA Automobile Genuine Stereo Cassette Deck

## Model PT-8006I

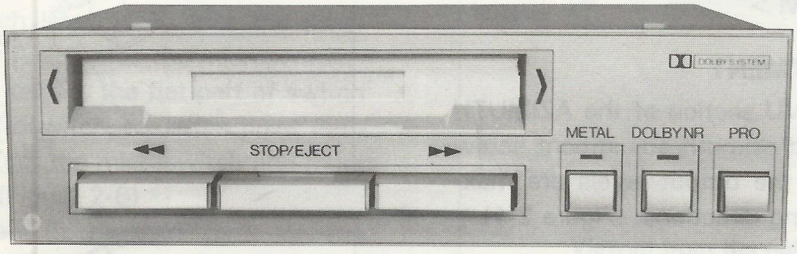


## ■ SPECIFICATIONS:

Reproduction system: 4 track, 2 channel, 2 program stereo deck (Monaural tape playable)
Tape speed: 4.76cm/sec.
Wow and flutter: Less than 0.15% (W.R.M.S.)
Separation: More than 30dB
Crosstalk: More than 40dB
S/N ratio:
NORM: DOLBY NR OFF: More than 42dB
DOLBY NR ON: More than 50dB
METAL: DOLBY NR OFF: More than 44dB
DOLBY NR ON: More than 52dB
FF, REW time: Less than 90s. (C-60)
Load impedance: 10 kΩ
Output level: 150 mV [at 10 kΩ load, 315 Hz-0vu]
Power supply voltage: DC 13.2V Negative ground
Current consumption: Less than 3A (at plunger operated)
Semiconductors: 4ICs, 7 transistors and 20 diodes

Dimensions:

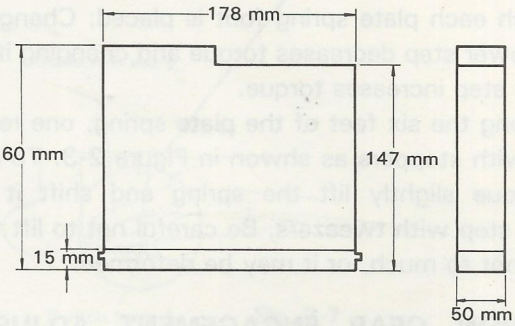


Weight 1.26 kg

- Dolby and the double-D symbol are trademarks of Dolby Laboratories Licensing Corporation.
- Noise Reduction System manufactured under license from Dolby Laboratories Licensing Corporation.

## ■ COMPONENT:

- PT-8006I-A

Main unit 1



Published by Service Administration Section. PT-8006I

## ■ ADJUSTMENT:

### 1. ADJUSTING DOLBY LEVEL

Play the test tape CTT-422-112 (400Hz, 200nWb/m) and adjust VR101 and VR201 so that the voltage at TP3 and TP4 becomes 775mV. (Dolby NR switch : OFF)

### 2. ADJUSTING DOLBY NR EFFECTIVE WIDTH

(1) Insert an empty pack into the deck to turn on the electrical circuit.
(2) Set the CR oscillator frequency to 5kHz and feed this signal to TP1(TP2).
(3) Adjust the output of the oscillator so that the level at TP3 (TP4) becomes 59mV when the Dolby NR switch is set to the OFF position.
(4) With the Dolby NR switch set to the ON position, adjust VR001 to set the level 8dB below that of item (3) above.
(Tape Selector : NORM)

## <TAPE MECHANISM>

### 1. AZIMUTH ADJUSTMENT

Play the 8kHz, −10VU section of the AZIMUTH tape and adjust the head azimuth adjustment screw (716-0429-00) so that the output levels are maximized in both tape running directions. (Figure 2-1)

### 2. REEL BASE TORQUE ADJUSTMENT

The plate spring (brass) which applies torque to each reel base can be seen through the hole in the deck plate around each reel shaft. (Figure 2-2)

Six sets of 3-level steps are provided on each reel base and torque can be varied by changing the step on which each plate spring foot is placed; Changing it to a lower step decreases torque and changing it to a higher step increases torque.

Among the six feet of the plate spring, one rests a step with stoppers as shwon in Figure 2-3. To adjust torque slightly lift the spring and shift it to auother step with tweezers. Be careful not to lift the spring foot to much, or it may be deformed.

### 3. FF/REW GEAR ENGAGEMENT ADJUSTMENT

If any abnormal sound is heard during FF/REW operation, adjust gear engagement as follows.

First identify the gear causing the abnormal sound. Then, adjust projection of the base plate assembly by bending it in an appropriate direction as shown in Fig. 2-4; (A) when the REW gear causes abnormal sound; (B) when the FF gear causes abnormal sound.

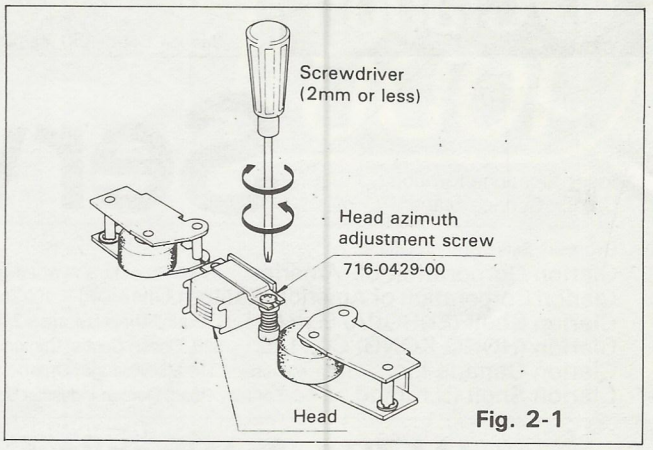

Fig. 2-1

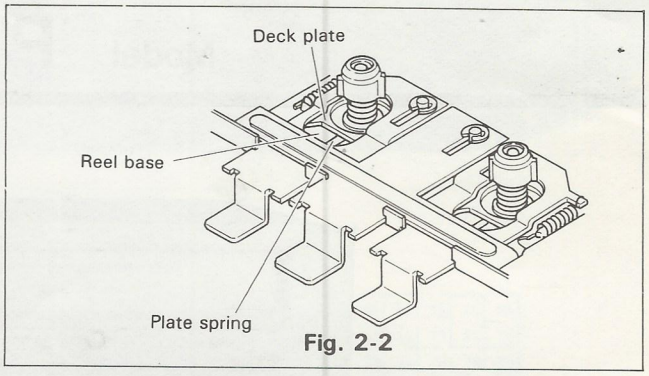

Fig. 2-2

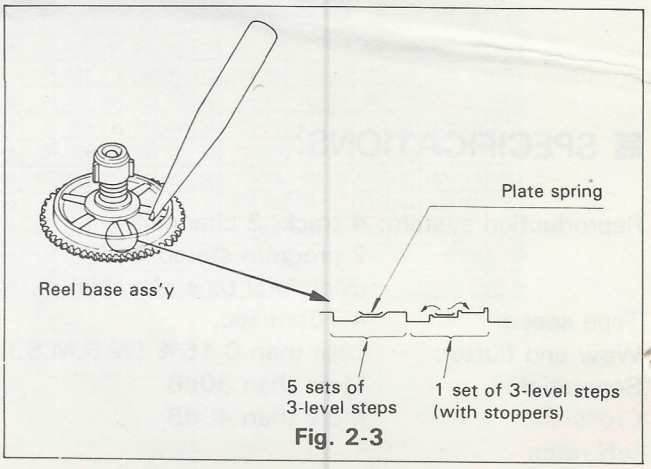

Fig. 2-3

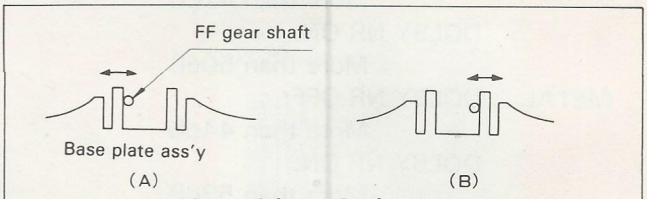

Viewed from the bottom
Fig. 2-4

## 4. LEAF SWITCH ADJUSTMENT

Adjust the leaf switch gap (t) to 0.5mm by loosening the machine screw (M2×6) las shown in Figure 2-5.

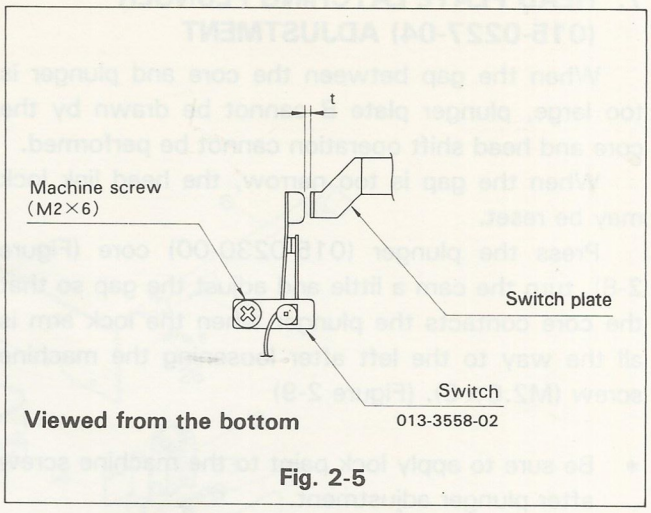


Fig. 2-5

## 5. POWER SWITCH (MICROSWITCH) ADJUSTMENT

The microswitch is actuated as follows: when a cassette is inserted, the guide A-A assembly drops and the projection on the right side of the A-A assembly pushes switch lever A so that the other end of the switch lever A actuates the microswitch.

When a cassette is loaded, the flat part of switch lever A around the microswitch actuation point (embossed part) must contact the microswitch and must not move any further. (Figure 2-6)

Bend the projection (highlighted part) of the guide A-A assembly in the direction of movement of switch lever A so that the above condition is satisfied. (Figure 2-7)

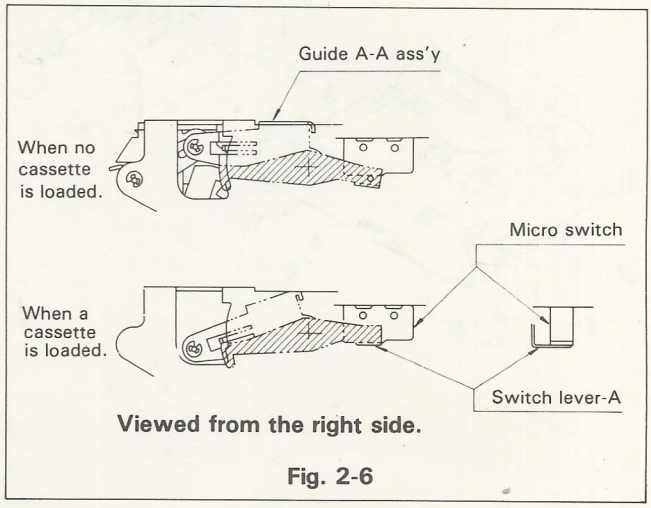


Fig. 2-6

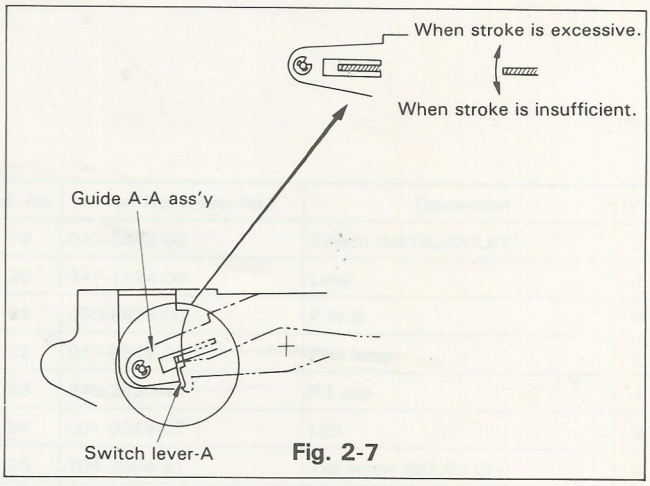


Fig. 2-7

## 6. HEAD PLATE SLIDING PLUNGER (015-0230-00) ADJUSTMENT

Press the plunger core by hand in the direction indicated with; if the core stroke is insufficient, the lock mechanism of the plunger link will not be released and the cam gear will not move; and, if the core stroke is excessive, the drawing force will be lowered and the core will not be drawn.

Adjust distance t in Figure 2-8 to 1.3 ~ 1.5mm after loosening the machine screw (M2.6×3). After adjustment has been completed, press the core and check whether or not it is returned smoothly by the spring. Apply lock paint to the screw.

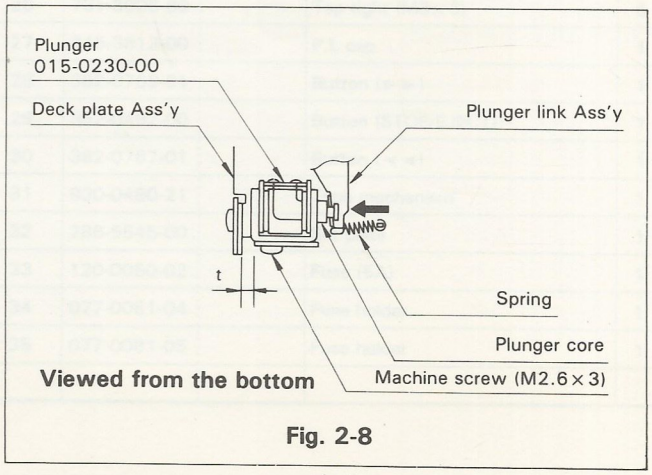


Fig. 2-8

## 7. HEAD PLATE LATCHING PLUNGER (015-0227-04) ADJUSTMENT

When the gap between the core and plunger is too large, plunger plate B cannot be drawn by the core and head shift operation cannot be performed.

When the gap is too narrow, the head link lock may be reset.

Press the plunger (015-0230-00) core (Figure 2-8), turn the cam a little and adjust the gap so that the core contacts the plunger when the lock arm is all the way to the left after loosening the machine screw (M2.6×3). (Figure 2-9)

* Be sure to apply lock paint to the machine screw after plunger adjustment.

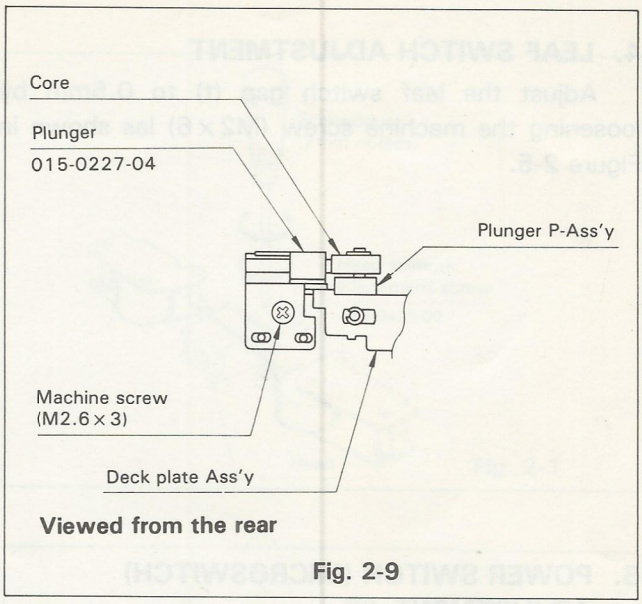


Fig. 2-9

## ■ EXPLODED VIEW:

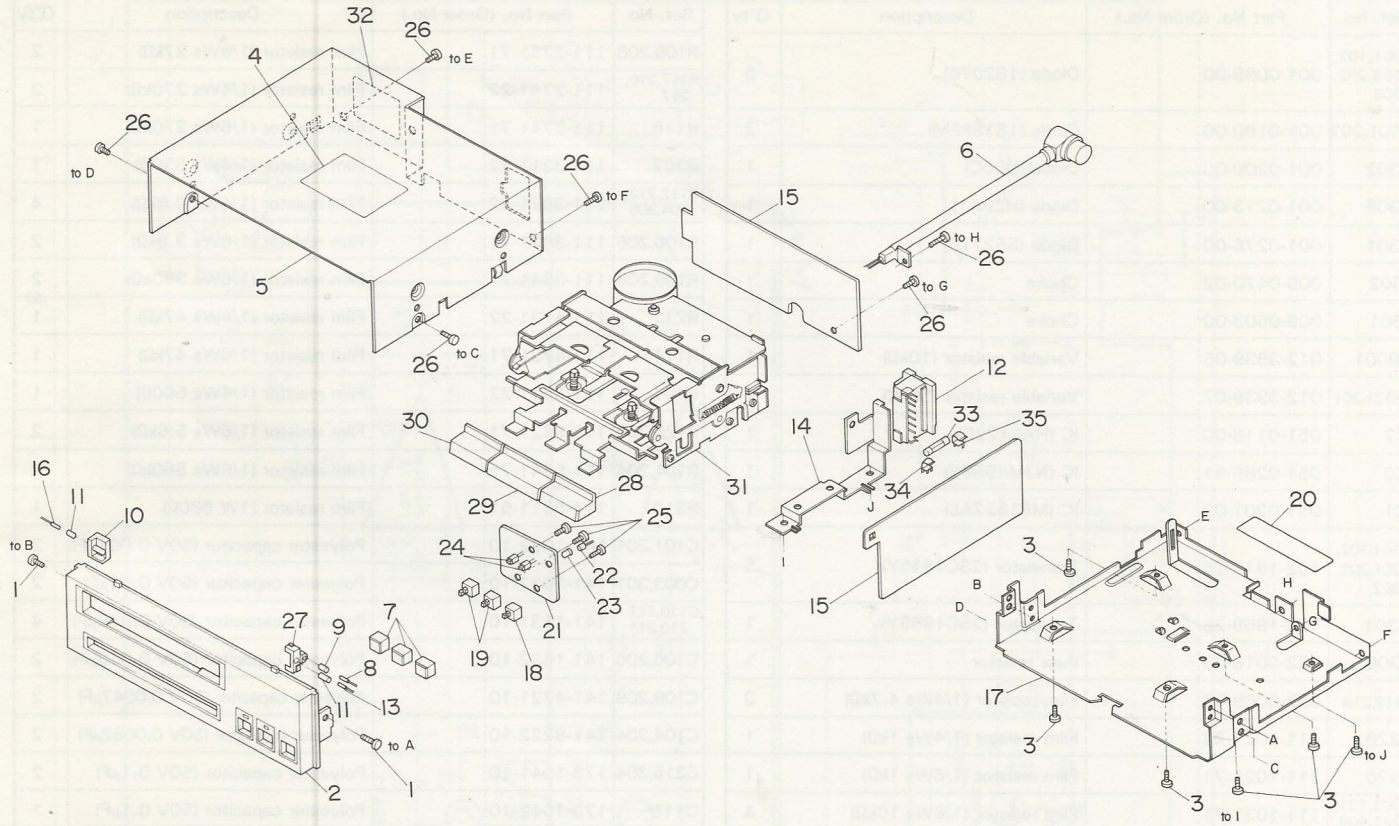


## ■ PARTS LIST:

### • Main section

| Ref. No. | Part No. (Order No.) | Description | Q'ty |
|---|---|---|---|
| 1 | 714-3006-81 | Machine screw (M3×6) | 2 |
| 2 | 940-0414A | Escutcheon ass'y | 1 |
| 3 | 714-3004-80 | Machine screw (M3×4) | 6 |
| 4 | 290-2909-02 | Label | 1 |
| 5 | 310-1122-02 | Upper case | 1 |
| 6 | 852-7447-01 | Extension lead | 1 |
| 7 | 382-0490-01 | Button (MTL/ ◻◻ /PRO) | 3 |
| 8 | 017-0324-12 | Pilot lamp | 1 |
| 9 | 345-2671-15 | P.L cap | 1 |
| 10 | 345-3615-00 | P.L holder | 1 |
| 11 | 345-2830-62 | P.L cap | 2 |
| 12 | 074-0697-00 | Outlet socket | 1 |
| 13 | 017-0324-14 | Pilot lamp | 1 |
| 14 | 313-1177-00 | Heat sink | 1 |
| 15 | 099-6729-01 | P.W.B | 1 |
| 16 | 017-0324-13 | Pilot lamp | 1 |
| 17 | 311-1099-02 | Lower case | 1 |
| 18 | 013-3648-01 | Switch (PRO) | 1 |

| Ref. No. | Part No. (Order No.) | Description | Q'ty |
|---|---|---|---|
| 19 | 013-3648-00 | Switch (METAL/DOLBY) | 2 |
| 20 | 347-1824-00 | Label | 1 |
| 21 | 099-6826-00 | P.W.B | 1 |
| 22 | 017-0345-09 | Pilot lamp | 1 |
| 23 | 345-2830-47 | P.L cap | 1 |
| 24 | 001-0358-07 | LED | 2 |
| 25 | 704-2606-81 | Tap screw (M2.6×6) | 3 |
| 26 | 731-3006-80 | Tap tight (M3×6) | 6 |
| 27 | 345-3613-00 | P.L cap | 1 |
| 28 | 382-0769-01 | Button (►►) | 1 |
| 29 | 382-0492-00 | Button (STOP/EJECT) | 1 |
| 30 | 382-0767-01 | Button (◄◄) | 1 |
| 31 | 930-0480-21 | Tape mechanism | 1 |
| 32 | 286-5545-00 | Set plate | 1 |
| 33 | 120-0050-02 | Fuse (5A) | 1 |
| 34 | 077-0081-04 | Fuse holder | 1 |
| 35 | 077-0081-05 | Fuse holder | 1 |
| | | | |

# ■ PARTS LIST:

## • Electrical section

| Ref. No. | Part No. (Order No.) | Description | Q'ty |
|---|---|---|---|
| D001,102, 103,202, 203 | 001-0095-00 | Diode (1S2076) | 5 |
| D101,201 | 001-0180-00 | Diode (1S188FM) | 2 |
| D302 | 001-0200-00 | Diode (U06C) | 1 |
| D305 | 001-0213-00 | Diode (HZ9A1) | 1 |
| D301 | 001-0276-00 | Diode (S5277B) | 1 |
| L302 | 009-0470-02 | Choke | 1 |
| L301 | 009-0603-00 | Choke | 1 |
| VR001 | 012-3939-05 | Variable resistor (10kΩ) | 1 |
| VR101,201 | 012-3939-07 | Variable resistor (50kΩ) | 2 |
| IC2 | 051-0118-00 | IC (HA11226) | 1 |
| IC3 | 051-0285-51 | IC (NJM4558S) | 1 |
| IC1 | 051-0301-02 | IC (M51522AL) | 1 |
| Q101,102, 201,202, 302 | 102-1815-25 | Transistor (2SC1815Y) | 5 |
| Q301 | 102-1959-25 | Transistor (2SC1959Y) | 1 |
| R306 | 032-0018-00 | Fuse resistor | 1 |
| R119,219 | 032-0059-03 | Film resistor (1/4Ws 4.7kΩ) | 2 |
| R220 | 111-1021-22 | Film resistor (1/4Ws 1kΩ) | 1 |
| R120 | 111-1021-71 | Film resistor (1/6Ws 1kΩ) | 1 |
| R003,121, 221,406 | 111-1031-71 | Film resistor (1/6Ws 10kΩ) | 4 |
| R001,114, 118 | 111-1041-22 | Film resistor (1/4Ws 100kΩ) | 3 |
| R101,107, 125,201, 207,214, 218,225, 408 | 111-1041-71 | Film resistor (1/6Ws 100kΩ) | 9 |
| R102,202, 301 | 111-1211-71 | Film resistor (1/6Ws 120Ω) | 3 |
| R215 | 111-1231-22 | Film resistor (1/4Ws 12kΩ) | 1 |
| R115 | 111-1231-71 | Film resistor (1/6Ws 12kΩ) | 1 |
| R103,203, 309,310 | 111-1531-71 | Film resistor (1/6Ws 15kΩ) | 4 |
| R113,213, 311 | 111-1811-71 | Film resistor (1/6Ws 180Ω) | 3 |
| R308 | 111-2211-22 | Film resistor (1/4Ws 220Ω) | 1 |
| R302 | 111-2221-71 | Film resistor (1/6Ws 2.2kΩ) | 1 |
| R122,123, 124,222, 223,224 | 111-2231-71 | Film resistor (1/6Ws 22kΩ) | 6 |
| R002 | 111-2241-22 | Film resistor (1/4Ws 220kΩ) | 1 |
| R303 | 111-2291-71 | Film resistor (1/6Ws 2.2Ω) | 1 |
| R105,205 | 111-2721-71 | Film resistor (1/6Ws 2.7kΩ) | 2 |

| Ref. No. | Part No. (Order No.) | Description | Q'ty |
|---|---|---|---|
| R108,208 | 111-2731-71 | Film resistor (1/6Ws 27kΩ) | 2 |
| R117,216, 217 | 111-2741-22 | Film resistor (1/4Ws 270kΩ) | 3 |
| R116 | 111-2741-71 | Film resistor (1/6Ws 270kΩ) | 1 |
| R307 | 111-3311-22 | Film resistor (1/4Ws 330Ω) | 1 |
| R112,212, 304,305 | 111-3921-22 | Film resistor (1/4Ws 3.9kΩ) | 4 |
| R106,206 | 111-3921-71 | Film resistor (1/6Ws 3.9kΩ) | 2 |
| R109,209 | 111-3941-71 | Film resistor (1/6Ws 390kΩ) | 2 |
| R211 | 111-4731-22 | Film resistor (1/4Ws 47kΩ) | 1 |
| R111 | 111-4731-71 | Film resistor (1/6Ws 47kΩ) | 1 |
| R401 | 111-5611-22 | Film resistor (1/4Ws 560Ω) | 1 |
| R126,226 | 111-5621-71 | Film resistor (1/6Ws 5.6kΩ) | 2 |
| R104,204 | 111-5641-71 | Film resistor (1/6Ws 560kΩ) | 2 |
| R312 | 114-6811-51 | Film resistor (1W 680Ω) | 1 |
| C101,201 | 141-1022-10 | Polyester capacitor (50V 0.001μF) | 2 |
| C003,301 | 141-1032-10 | Polyester capacitor (50V 0.01μF) | 2 |
| C110,111, 210,211 | 141-1531-10 | Polyester capacitor (50V 0.015μF) | 4 |
| C106,206 | 141-1832-10 | Polyester capacitor (50V 0.018μF) | 2 |
| C109,209 | 141-4721-10 | Polyester capacitor (50V 0.0047μF) | 2 |
| C104,204 | 141-8222-10 | Polyester capacitor (50V 0.0082μF) | 2 |
| C215,304 | 173-1041-10 | Polyester capacitor (50V 0.1μF) | 2 |
| C115 | 173-1042-10 | Polyester capacitor (50V 0.1μF) | 1 |
| C120,220 | 173-4712-10 | Polyester capacitor (50V 470pF) | 2 |
| C102,105, 117,118, 202,205, 217,218 | 179-1053-62 | Electrolytic capacitor (50V 1μF) | 8 |
| C001,113, 116,213, 216,307, 309 | 179-1063-32 | Electrolytic capacitor (16V 10μF) | 7 |
| C302 | 179-1073-33 | Electrolytic capacitor (16V 100μF) | 1 |
| C310 | 179-1083-43 | Electrolytic capacitor (25V 1000μF) | 1 |
| C119,219 | 179-2253-62 | Electrolytic capacitor (50V 2.2μF) | 2 |
| C306,406 | 179-3363-32 | Electrolytic capacitor (16V 3.3μF) | 2 |
| C103,203, 308 | 179-4763-22 | Electrolytic capacitor (10V 47μF) | 3 |
| C303 | 179-4763-32 | Electrolytic capacitor (16V 47μF) | 1 |
| C002,305 | 179-4773-33 | Electrolytic capacitor (16V 470μF) | 2 |
| C114,214 | 181-1043-62 | Electrolytic capacitor (50V 0.1μF) | 2 |
| C107,108, 112,207, 208,212 | 181-3342-62 | Electrolytic capacitor (50V 0.33μF) | 6 |

## • Mechanism section

| Ref. No. | Part No. (Order No.) | Description | Q'ty |
|---|---|---|---|
| D502,508 | 001-0276-00 | Diode (S5277B) | 2 |
| D501, 503~507 | 001-0330-00 | Diode (1SS119) | 6 |
| IC4 | 051-0403-01 | IC (TD6308AP) | 1 |
| Q501 | 100-1020-25 | Transistor (2SA1020Y) | 1 |
| R502 | 111-1011-71 | Film resistor (1/8W 100Ω) | 1 |
| R504 | 111-1021-71 | Film resistor (1/8W 1kΩ) | 1 |

| Ref. No. | Part No. (Order No.) | Description | Q'ty |
|---|---|---|---|
| R503 | 111-2711-21 | Film resistor (1/4Ws 270Ω) | 1 |
| R501 | 111-3331-71 | Film resistor (1/8W 33kΩ) | 1 |
| R505 | 114-2291-51 | Film resistor (1W 2.2Ω) | 1 |
| C505 | 179-4773-33 | Electrolytic capacitor (16V 470μF) | 1 |
| C501,502, 503 | 182-1063-32 | Electrolytic capacitor (16V 10μF) | 3 |
| C504 | 182-4743-62 | Electrolytic capacitor (50V 0.47μF) | 1 |

# ■ CIRCUIT DIAGRAM:

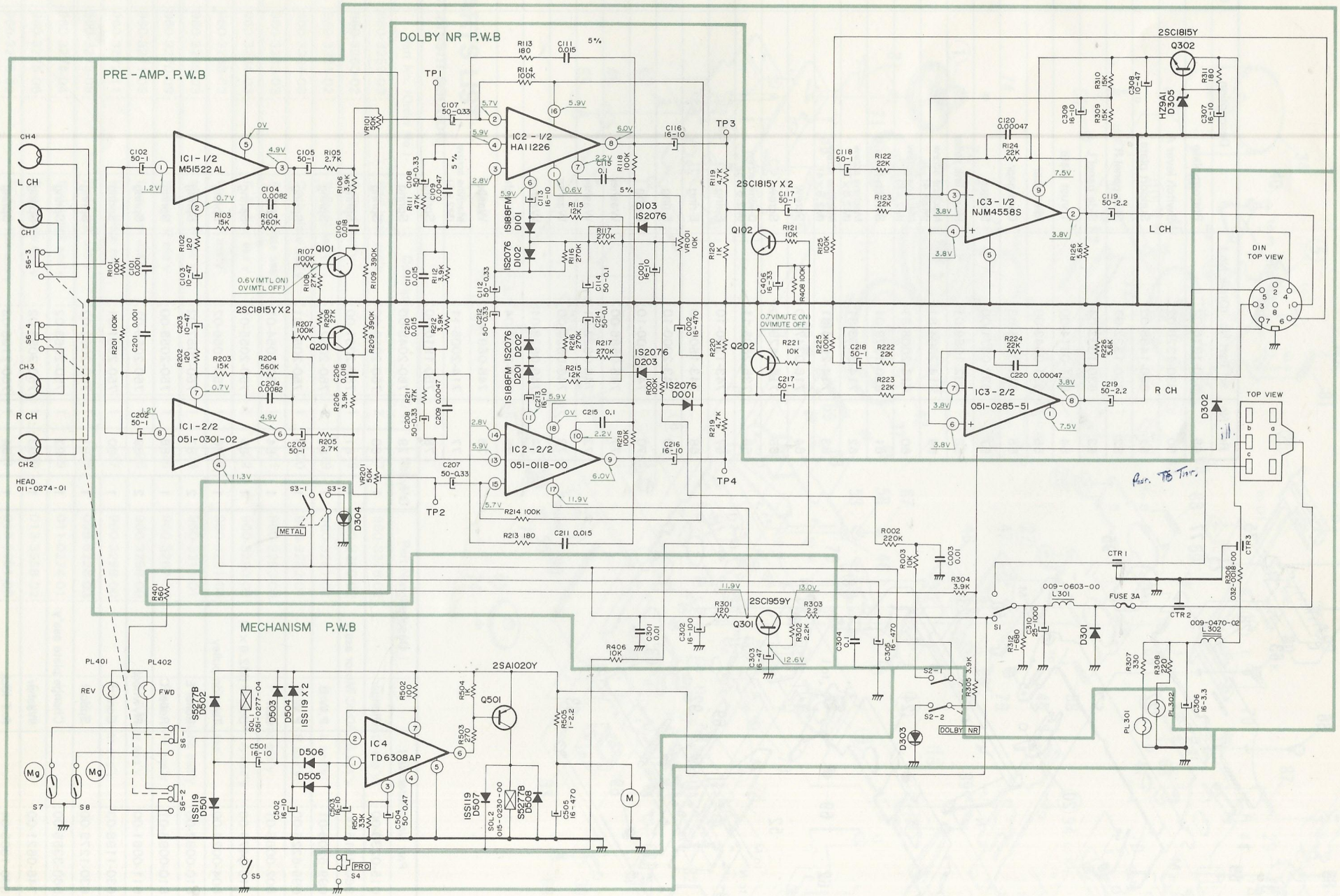

# ■ PRINTED WIRING BOARD:

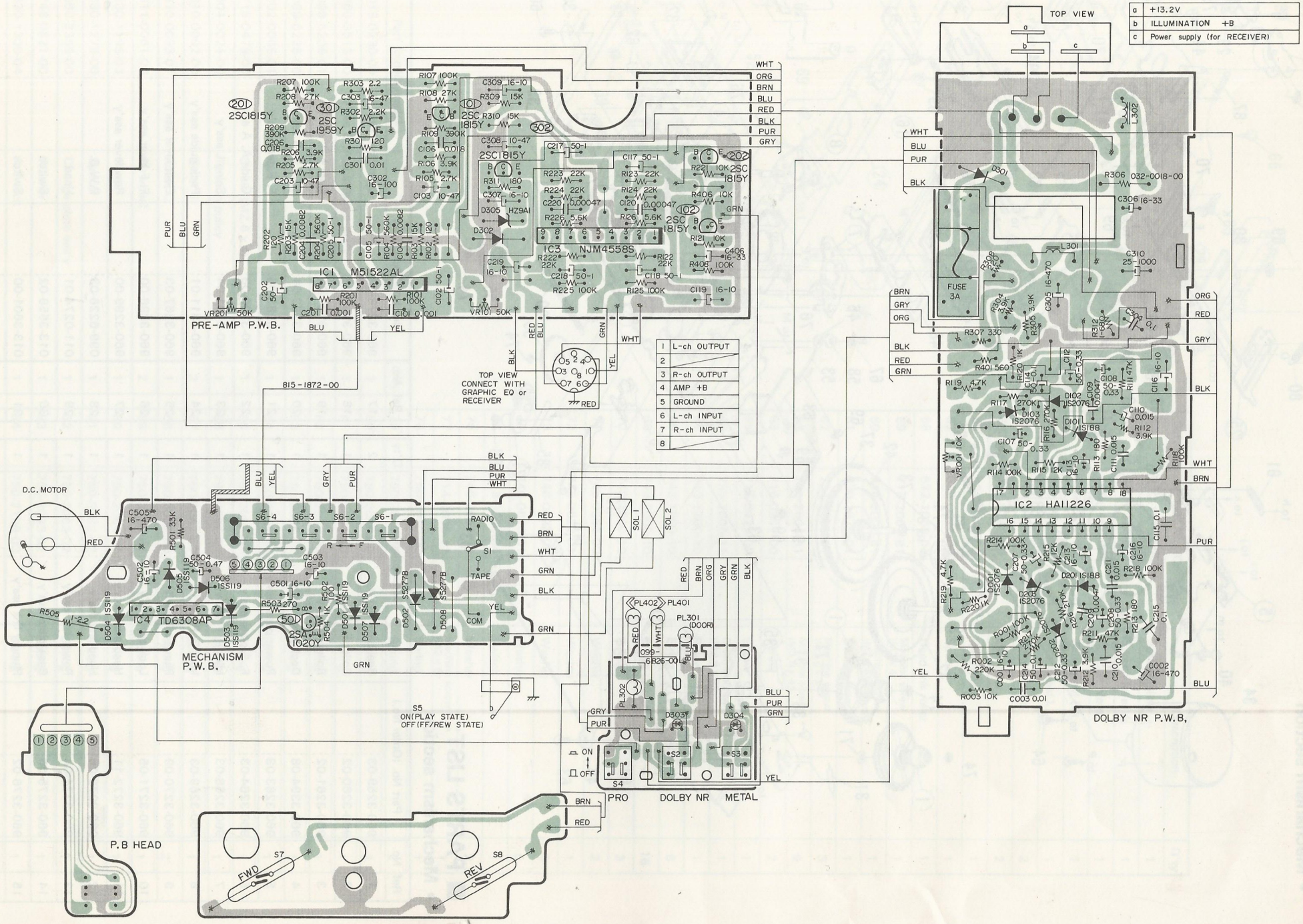






Printed in Japan 298-3258-00 APR. 1985 Ⓣ

## ■ EXPLODED VIEW • PARTS LIST:

### • Mechanism section

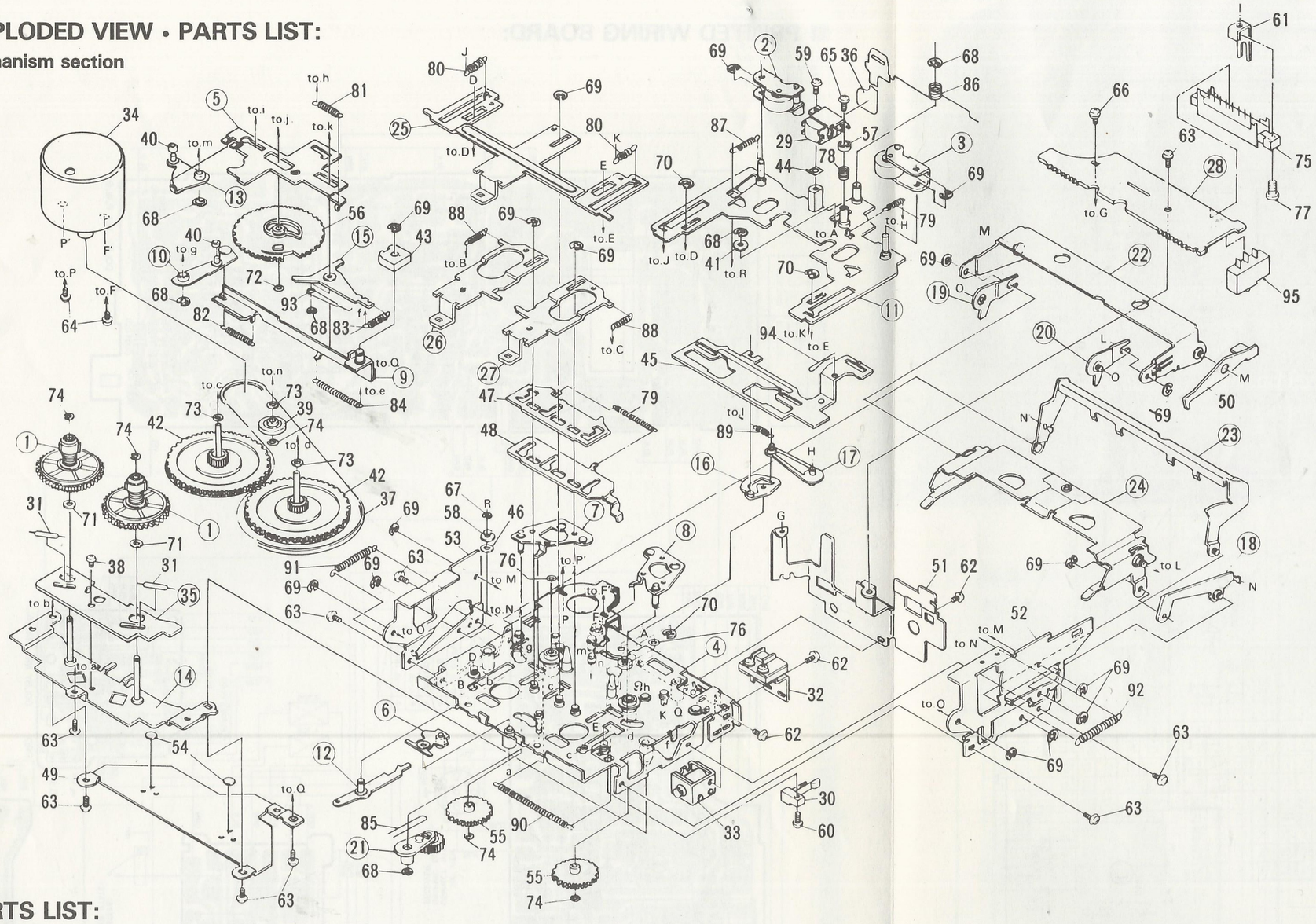

## ■ PARTS LIST:

### • Mechanism section

| Ref. No. | Part No. (Order No.) | Description | Q'ty |
|---|---|---|---|
| 1 | 960-3259-03 | Reel base ass'y | 2 |
| 2 | 960-3260-02 | Roller F ass'y | 1 |
| 3 | 960-3261-02 | Roller R ass'y | 1 |
| 4 | 960-3394-08 | Deck plate ass'y | 1 |
| 5 | 960-3263-03 | Power plate ass'y | 1 |
| 6 | 960-3264-03 | F. F plate ass'y | 1 |
| 7 | 960-3268-03 | Idler P. F ass'y | 1 |
| 8 | 960-3269-03 | Idler P. R ass'y | 1 |
| 9 | 960-3270-09 | Plunger P ass'y | 1 |
| 10 | 960-3271-05 | Lock arm ass'y | 1 |
| 11 | 960-3272-11 | Head plate ass'y | 1 |
| 12 | 960-3273-05 | Head link ass'y | 1 |
| 13 | 960-3274-04 | Power link ass'y | 1 |
| 14 | 960-3275-06 | Base plate ass'y | 1 |
| 15 | 960-3276-02 | Plunger link ass'y | 1 |
| 16 | 960-3277-02 | Cam ass'y | 1 |

| Ref. No. | Part No. (Order No.) | Description | Q'ty |
|---|---|---|---|
| 17 | 960-3278-02 | Cam plate ass'y | 1 |
| 18 | 960-3280-02 | Guide A. B ass'y | 1 |
| 19 | 960-3281-01 | Eject L. L ass'y | 1 |
| 20 | 960-3282-01 | Eject L. R ass'y | 1 |
| 21 | 960-3283-03 | F. F gear ass'y | 1 |
| 22 | 960-3290-03 | Guide A. A ass'y | 1 |
| 23 | 960-3291-04 | Seing L ass'y | 1 |
| 24 | 960-3311-01 | Pack guide ass'y | 1 |
| 25 | 960-3267-03 | Eject lever ass'y | 1 |
| 26 | 960-3298-00 | F. F lever ass'y | 1 |
| 27 | 960-3299-00 | Rew lever ass'y | 1 |
| 28 | 099-6226-03 | P.W.B. | 1 |
| 29 | 011-0274-01 | Head | 1 |
| 30 | 013-3558-02 | Switch | 1 |
| 31 | 013-3601-00 | Switch | 2 |
| 32 | 015-0227-04 | Plunger | 1 |

| Ref. No. | Part No. (Order No.) | Description | Q'ty |
|---|---|---|---|
| 33 | 015-0230-00 | Plunger | 1 |
| 34 | 960-3515-00 | D. C Motor ass'y | 1 |
| 35 | 099-6206-01 | P.W.B. | 1 |
| 36 | 099-6225-00 | P.W.B. | 1 |
| 37 | 602-0065-01 | Belt | 1 |
| 38 | 716-0479-00 | Screw (M2.6×4) | 1 |
| 39 | 604-0024-00 | Tension pulley | 1 |
| 40 | 610-0092-00 | Roller E | 2 |
| 41 | 610-0093-01 | Roller C | 1 |
| 42 | 611-0061-00 | Flywheel | 2 |
| 43 | 630-1198-03 | Core | 1 |
| 44 | 630-1279-00 | Spacer | 1 |
| 45 | 960-3355-00 | Change plate ass'y | 1 |
| 46 | 746-0621-00 | Washer | 1 |
| 47 | 630-1305-04 | F. F lock | 1 |
| 48 | 630-1307-02 | Switch plate | 1 |

| Ref. No. | Part No. (Order No.) | Description | Q'ty |
|---|---|---|---|
| 49 | 630-1316-02 | Bottom plate | 1 |
| 50 | 630-1326-02 | Switch lever A | 1 |
| 51 | 630-1488-02 | Support plate | 1 |
| 52 | 630-1332-07 | Side panel R | 1 |
| 53 | 630-1333-04 | Side panel L | 1 |
| 54 | 631-0314-00 | Thrust plate | 2 |
| 55 | 631-0343-00 | Idler gear | 2 |
| 56 | 631-0345-03 | Cam gear | 1 |
| 57 | 632-0871-00 | Spacer | 1 |
| 58 | 632-1069-01 | Head link roller | 1 |
| 59 | 714-2004-81 | Machine screw (M2×4) | 1 |
| 60 | 714-2006-81 | Machine screw (M2×6) | 1 |
| 61 | 630-1379-01 | Switch lever-B | 1 |
| 62 | 714-2603-81 | Machine screw (M2.6×3) | 3 |
| 63 | 714-2604-81 | Machine screw (M2.6×4) | 9 |
| 64 | 716-0347-00 | Screw | 2 |
| 65 | 716-0429-00 | Screw | 1 |
| 66 | 735-2605-11 | D-sems screw (M2.6×5) | 1 |
| 67 | 743-1200-10 | E-ring | 1 |
| 68 | 743-1500-10 | E-ring | 6 |
| 69 | 743-2000-10 | E-ring | 16 |
| 70 | 743-2500-10 | E-ring | 3 |
| 71 | 745-0586-00 | Washer | 2 |
| 72 | 746-0622-01 | Washer | 1 |
| 73 | 746-0624-00 | Washer | 3 |
| 74 | 746-0628-01 | Washer | 5 |
| 75 | 013-3600-04 | Switch | 1 |
| 76 | 746-0691-00 | Washer | 2 |
| 77 | 714-2005-11 | Machine screw (M2×5) | 1 |
| 78 | 750-1910-00 | Spring | 1 |
| 79 | 750-2049-00 | Spring | 2 |
| 80 | 750-2050-00 | Spring | 2 |
| 81 | 750-2051-00 | Spring | 1 |
| 82 | 750-2052-03 | Spring | 1 |
| 83 | 750-2053-01 | Spring | 1 |
| 84 | 750-2054-01 | Spring | 1 |
| 85 | 750-2055-01 | Spring | 1 |
| 86 | 750-2056-02 | Spring | 1 |
| 87 | 750-2057-02 | Spring | 1 |
| 88 | 750-2058-00 | Spring | 2 |
| 89 | 750-2059-01 | Spring | 1 |
| 90 | 750-2061-01 | Spring | 1 |
| 91 | 750-2062-02 | Spring | 1 |
| 92 | 750-2063-02 | Spring | 1 |
| 93 | 750-2093-02 | Spring | 1 |
| 94 | 750-2108-03 | Spring | 1 |
| 95 | 013-3580-00 | Switch | 1 |



PT-8006I