Clarion

Manufacturer
Clarion Co., Ltd.

Export Division
Clarion Shoji Co., Ltd.
3, Kojimachi 5-chome, Chiyoda-ku, Tokyo, 102 Japan
Tel: 03-265-2931
Telex: J22908, J22152, J25550 CLARISHO

Service Manual

Closer Relations through "Clarion Service Manual"

Overseas Sales Branch Offices
Clarion Corporation of America 5500 Rosecrans Ave., Lawndale, Calif., 90260 U.S.A. Tel: 213-973-1100 Telex: CLARIONLSA 66-4447
Clarion Corporation of America (Eastern Division) 100 Thirteenth Avenue, Ronkonkoma, New York 11779 U.S.A. Tel: 516-467-1120 Telex: 64-0787
Clarion Shoji (EUROPA) G.m.b.H. Rudolf-Diesel-Strasse 2, 6236 Eschborn 2, West Germany Tel: 06173-61036 Telex: 415414
Clarion (HONG KONG) Co., Ltd. 526, Ocean Centre, Canton Road, Tsimshatsui, Kowloon, Hong Kong Tel: 3-690528 Telex: HX64293 CLAHK
Clarion Canada Inc. 1401 Meyerside Dr. Mississauga, Ontario L5T IG8, Canada Tel: 416-678-1367 Telex: 216968573 CLARION MSGA
Clarion Shoji (U.K.) Ltd. 4-6, Faraday Road, Dorcan Industrial Estate, Dorcan, Swindon, Wiltshire. SN3.5HQ United Kingdom Tel: (0793) 24081 Telex: 44689

Mazda Automobile Genuine Radio with Cassette Stereo.

Model PT-7030F

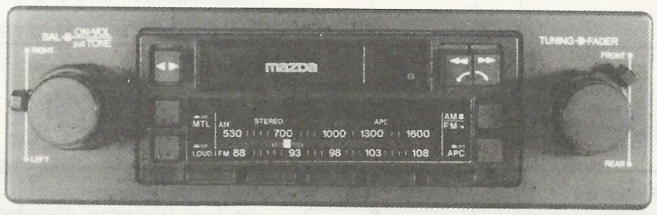

■ SPECIFICATIONS:

Radio section

Circuit system:	Superheterodyne
Tuning system:	Manual μ-tuning 5 push-buttons system
Receive range:	AM 530kHz to 1,610kHz FM 88MHz to 108MHz
Intermediate frequency:	AM 455kHz FM 10.7MHz
Quieting sensitivity:	AM Less than 30dB (at 20dB S/N) FM Less than 18dB (at 30dB S/N)
Selectivity:	AM More than 20dB (at ±10kHz detune)
AFC:	FM 300 to 800kHz
Separation:	FM More than 20dB
Fidelity: (Bass, treble = Flat)	AM 100Hz 0±4dB 400Hz 0dB 4,000Hz −16±6dB FM 100Hz 1±4dB 400Hz 0dB 7,000Hz −18±6dB

Tape section

Reproduction system:	4track, 2channel, stereo cassette deck
Tape speed:	4.76cm/s (1-7/8 ips)
Wow and flutter:	Less than 0.23% (W.R.M.S)
Separation:	More than 30dB
Cross talk:	More than 40dB
S/N ratio:	
Normal tape (120μs)	42dB
Metal tape (70μs)	44dB
F.F/REW time:	Less than 120sec. (C-60)

Synthesis

Load impedance:	4Ω×4
Power output:	More than 5W×4 (at tape mode. 1kHz, OVU, max. output)
Power supply voltage:	DC 13.2V (10.8V to 15.6V) Negative ground
Current consumption:	Less than 5A (at max. output)

Dimensions:

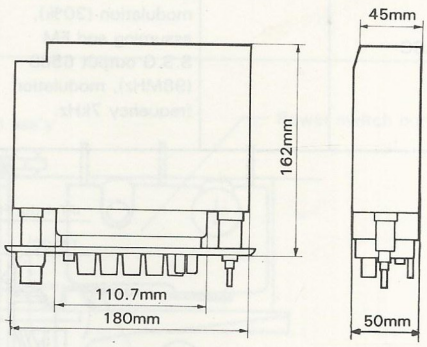

Weight: 1.6kg

■ COMPONENTS:

•PT-7030F-A

Main unit 1

■ ADJUSTMENTS:

• AM CIRCUIT

Item	Input	Frequency	Output	Method of adjustment		Instruments required	Remark
IF	TP1	455 kHz	TP2	IFT-2	Adjust for maximum.	• Sweep generator • Oscilloscope	Vol: minimum TON: high BAL: center Dial pointer: right end
Tracking	Antenna receptacle	1610 kHz	Meter across the speaker voice coil.	L-1		• S.S.G • V.T.V.M • Speaker (4Ω) • Dummy ANT	Use dummy antenna between S.S.G and ANT receptacle.
Antenna trimmer	Receive white noise	1.400kHz	Speaker	TC201	Adjust the trimmer so that the noise output becomes maximum.	• Speaker	TC201

• FM CIRCUIT

Item	Input	Frequency	Output	Method of adjustment		Instruments required	Remark
S curve	TP100	10.7MHz	TP104	IFT1 IFT102	Adjust for maximum.	• Sweep generator • Oscilloscope • V.T.V.M	
Tracking	Antenna receptacle	88MHz	Meter across the speaker voice coil.	T-2, T-1		• S.S.G • V.T.V.M • Speaker (4Ω) • Dummy ANT.	
<MPX> (VCO)		98MHz, 55dB	Connect a frequency counter to TP105 and adjust VR102 to 76kHz			• S.S.G • Frequency counter	
Separation		Right or left signal (400Hz).	Meter across the speaker voice coil.	VR101	Adjust the VR for maximum separation.	• Stereo SG • S.S.G	
SASC		Set to the specified modulation (30%), assuming and FM S.S.G output 65dB (98MHz), modulation frequency 7kHz.	Meter across the speaker voice coil.	VR103	Set the output level to 0dB (=0.775V) using the volume control. Set the FM S.S.G output to 40dB and adjust VR so that the output level is −1dB	• Stereo SG • Oscilloscope • V.T.V.M. • Frequency SG	

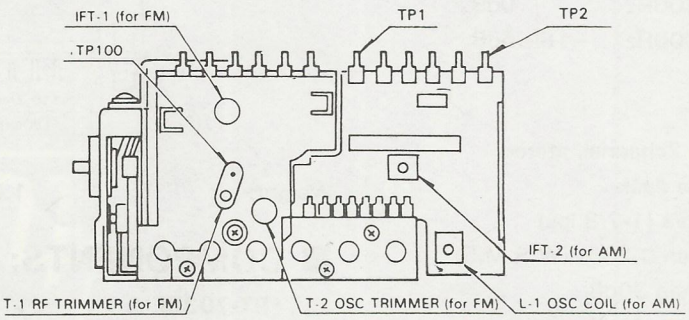

TAPE MECHANISM

1. Head Azimuth Adjustment (See Fig. 1)

○ Improper head azimuth is one of the causes which give rise to poor sound quality, crosstalk, etc., at the time of playback. If azimuth of the head is not proper, adjust as follows. However, to perform this adjustment, load the test tape and use the adjustment use screwdriver, inserting it through the hole in the lever mechanism (frame ass'y).

1) Play the test tape (315Hz, −10VU) and adjust the amplifier's volume control and balance control so that the output levels (gains of the playback system) of the left and right channels become equal.
2) Then play the test tape (8kHz, −10VU) and adjust the head azimuth adjusting screw so that the output level in both the forward and reverse directions of play becomes close to the respective peak (maximum output level) point. Then lock the head azimuth adjusting screw.

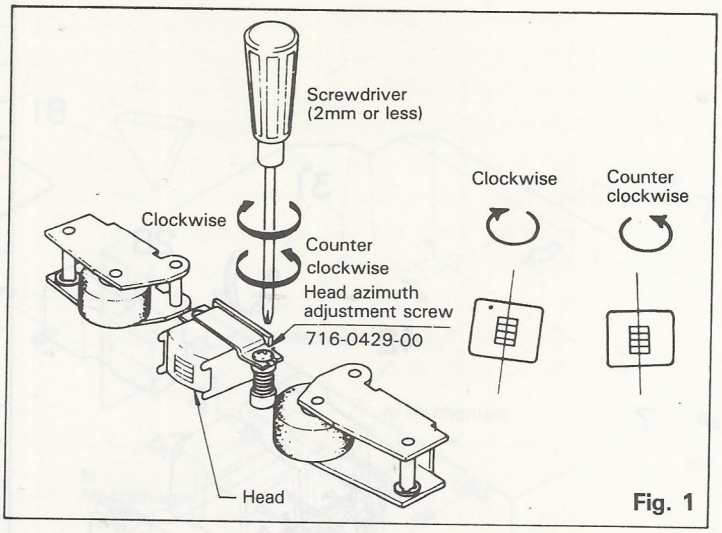

Fig. 1

2. Fast Forward, Rewind Gear Alignment (See Fig. 2)

○ If the mechanism does not operate properly and abnormal sound (gear noise) is produced at the time of fast forward and rewind, first of all check whether the sound is produced during fast forward (FF) or rewinding (REW). If it is produced during FF, adjust by bending the claw (A) to the left or right with radio pliers, etc., and if it is produced during REW, adjust by bending the claw (B) in the same manner. Adjust so that the clearance at this time between the flywheel and FF. REW gear becomes about 0.1 to 0.2mm.

1) If the gear engagement is loose and the gears produce a large noise, bend the claw away from the center line.
2) If the gear engagement is too hard and there is no clearance between the gears, bend the claw toward the center line.

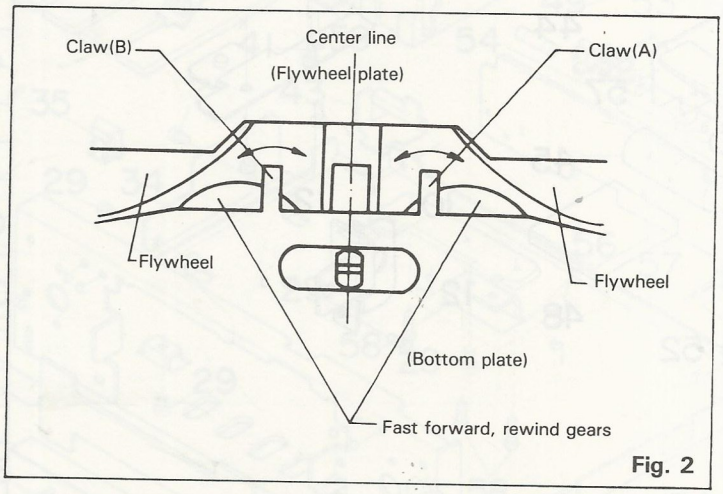

Fig. 2

3. Adjustment of Power Switch (See Fig. 3)

○ If power does not turn on when pack is inserted (loaded), or if power does not turn off after ejecting the pack, and the underlying cause is found to be misadjustment of the power switch, adjust the switch at proper position by bending upward or downward the adjusting claw of the guide arm ass'y by means of radio pliers, etc. However, make sure that at the time of ejecting there is a clearance of at least 0.2mm to 0.3mm between the body of the switch and the switch lever.

1) If power does not turn on when loading pack, adjust by bending the adjusting claw downward.
2) If power does not turn off when ejecting pack, adjust by bending the adjusting claw upward.

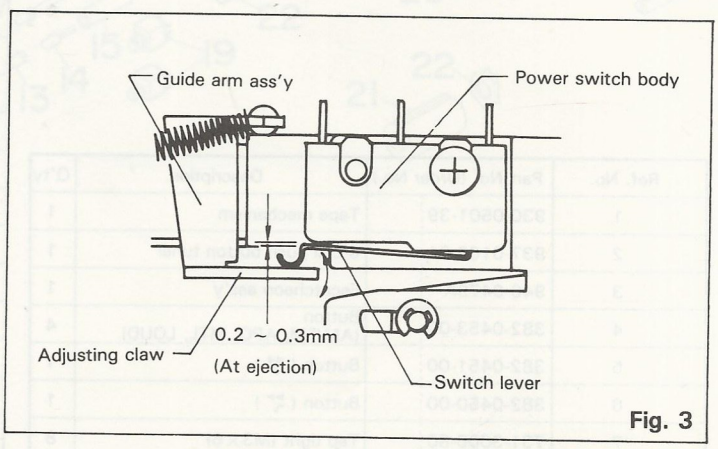

Fig. 3

4. Adjustment of Suction Plunger (See Fig. 4)

○ If it is not possible to hold the fast forward and rewind operations due to improper position of the plunger, adjust the position of the plunger.

To adjust, first load cassette. When cassette is loaded, the holding piece (or core plate) will come near the plunger. Now loosen the machine screws with which the plunger ass'y is fixed, adjust the position of the plunger ass'y so that the holding piece touches the plunger core and comes maximum to the right and fix it there by tightening the machine screws. However, at this time take care of the following matters.

1) If the plunger core attached to the holding piece is too much separated (lies too much toward the right side), it will not be attracted and thus fast forward and rewind operations will not be held.
2) On the contrary, if it is too much close (lies too much toward the left side), the holding piece will stick but the FF or REW operation will not be held or if held, will get released upon being subjected to shock.

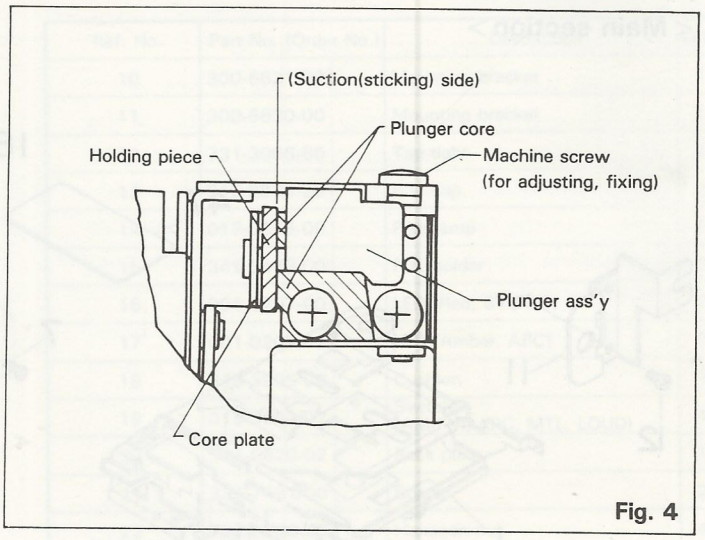

Fig. 4

■ EXPLODED VIEW•PARTS LIST:

<Main section>

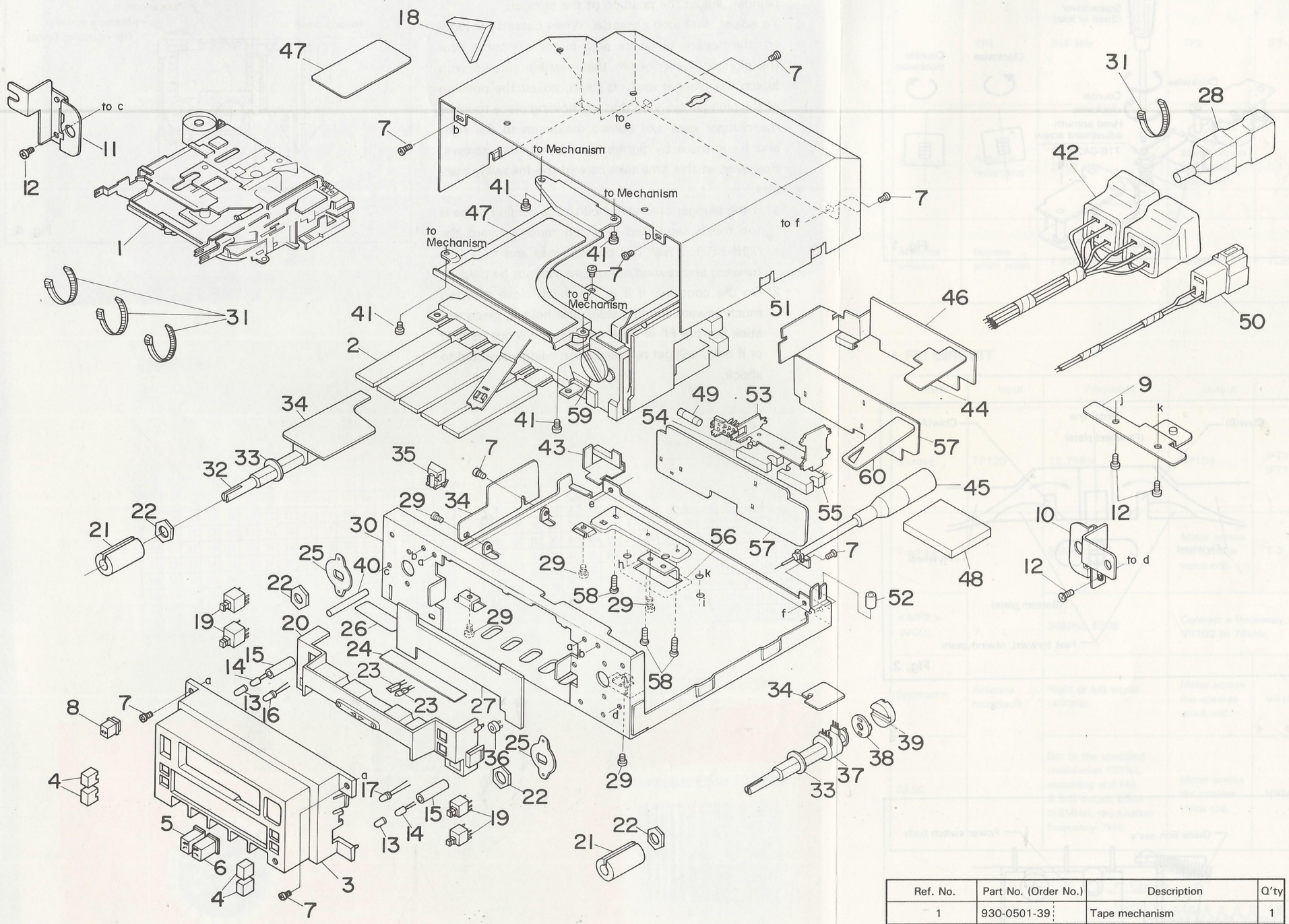

Ref. No.	Part No. (Order No.)	Description	Q'ty
1	930-0501-39	Tape mechanism	1
2	937-0166-01	6 coil push button tuner	1
3	940-0479A	Escutcheon ass'y	1
4	382-0453-00	Button (AM/FM, APC, MTL, LOUD)	4
5	382-0451-00	Button (⇶)	1
6	382-0450-00	Button (⇶)	1
7	731-3006-80	Tap tight (M3×6)	8
8	382-0452-01	Button (◄ ►)	1
9	300-6632-00	Mounting bracket	1

Ref. No.	Part No. (Order No.)	Description	Q'ty
10	300-6631-00	Mounting bracket	1
11	300-6630-00	Mounting bracket	1
12	731-3006-80	Tap tight	4
13	345-2830-20	P.L. cap.	2
14	017-0345-09	Pilot lamp	2
15	345-3463-00	P.L. holder	2
16	001-0207-00	LED (Red, STEREO)	1
17	001-0207-02	LED (Amber, APC)	1
18	345-3995-00	Cushion	1
19	013-3648-02	Switch (AM/FM, APC, MTL, LOUD)	4
20	374-0820-02	Back plate	1
21	335-1481-00	Spacer	2
22	722-0020-00	Hexagon nut	4
23	001-0250-01	LED (Green ◄ ►)	2
24	347-1791-00	Shade	1
25	330-7421-00	Adjustable plate	2
26	290-3410-00	Label	1
27	099-7276-00	P.W.B.	1
28	348-0130-00	Cover	1
29	714-3006-81	Machine screw (M3×6)	6
30	311-1172-01	Lower case	1
31	335-0833-01	Lead clamp	7
32	012-4301-00	Variable resistor (VOL/BAL)	1
33	745-0524-00	Flat washer	2
34	099-7277-00	P.W.B.	1
35	376-0880-04	Dial pointer	1
36	004-1544-00	Antenna trimmer	1
37	012-4026-00	Variable resistor (TUN/FAD)	1
38	335-1121-00	Oldham joint	1
39	335-1342-00	Oldham joint	1
40	820-4030-05	Vinyl tube	1
41	714-3004-81	Machine screw (M3×4)	4
42	851-2520-00	Speaker lead	1
43	347-1646-00	Insulator	1
44	347-1645-00	Insulator	1
45	092-0540-00	Antenna receptacle	1
46	347-1644-00	Insulator	1
47	290-3704-00	Label	1
48	345-3893-00	Cushion	1
49	120-0030-00	Fuse	1
50	850-2286-00	A-lead	1
51	310-1209-00	Upper case	1
52	820-9012-03	Vinyl tube	1
53	944-0695-00	Filter ass'y	1
54	051-0510-02	IC	1
55	051-0510-00	IC	1
56	286-5442-00	Set plate	1
57	099-7278-00	P.W.B.	1
58	714-3010-81	Machine screw	3
59	335-1393-00	Jointer	1
60	099-7277-00	P.W.B.	1

■ EXPLODED VIEW•PARTS LIST:

<Mechanism section>

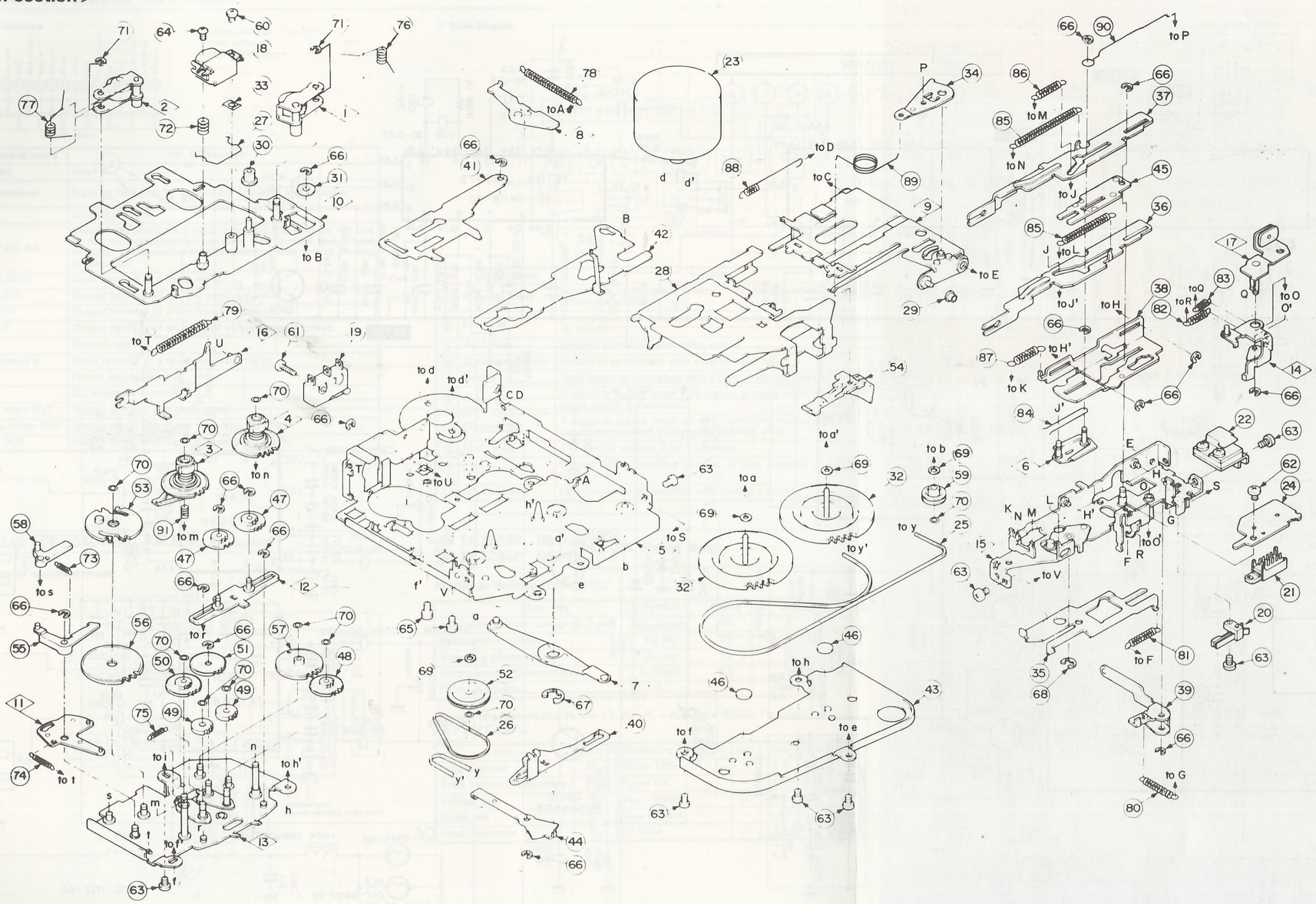

Ref. No.	Part No. (Order No.)	Description	Q'ty
1	960-3321-06	Roller F ass'y	1
2	960-3322-06	Roller R ass'y	1
3	960-3323-01	Reel base ass'y	1
4	960-3324-01	Reel base ass'y	1
5	960-3325-08	Deck plate ass'y	1
6	960-3327-01	Spring H ass'y	1
7	960-3328-04	Coupling P ass'y	1
8	960-3329-01	Link ass'y	1
9	960-3330-05	Guide arm ass'y	1
10	960-3331-07	Head plate ass'y	1
11	960-3332-03	Check P-B ass'y	1
12	960-3333-02	FF plate ass'y	1
13	960-3334-06	Bottom P ass'y	1

Ref. No.	Part No. (Order No.)	Description	Q'ty
14	960-3577-03	Lock plate ass'y	1
15	960-3337-06	Frame ass'y	1
16	960-3338-02	Program lever ass'y	1
17	960-3340-02	Core plate ass'y	1
18	011-0274-00	Head	1
19	013-2690-03	Switch	1
20	013-3470-01	Switch	1
21	013-3646-00	Switch	1
22	015-0227-06	Plunger	1
23	960-3522-00	D.C. motor ass'y	1
24	099-6334-03	P.W.B.	1
25	602-0068-00	Belt-A	1
26	602-0069-00	Belt-B	1

Ref. No.	Part No. (Order No.)	Description	Q'ty
27	750-2156-00	Spring	1
28	606-0071-02	Pack guide	1
29	610-0080-00	Roller	1
30	610-0258-01	Head P Roller	1
31	610-0104-02	Roller	1
32	611-0062-02	Flywheel	2
33	630-1279-00	Spacer	1
34	630-1394-02	Swing plate	1
35	630-1400-04	Off plate-B	1
36	630-1401-03	FF lever-A	1
37	630-1403-03	REW lever	1
38	630-1404-03	Eject plate	1
39	630-1405-01	Off arm	1

Ref. No.	Part No. (Order No.)	Description	Q'ty
40	630-1407-02	FF plate-B	1
41	630-1410-00	Power plate	1
42	630-1411-04	Change plate	1
43	630-1415-01	Flywheel plate	1
44	630-1420-00	FF link	1
45	630-1422-01	Hold plate	1
46	631-0293-00	Thrust washer	2
47	631-0353-00	FF-REW gear	2
48	631-0354-01	Gear-B	1
49	631-0355-01	Play idler gear	2
50	631-0356-00	Gear-R	1
51	631-0357-00	Gear-F	1
52	631-0358-02	Gear pulley	1
53	960-3506-01	Power gear ass'y	1
54	631-0360-01	Pack stopper	1
55	631-0361-00	Lock link	1
56	631-0362-01	Cam gear	1
57	631-0363-02	Gear-A	1
58	631-0364-02	Sub lock link	1
59	631-0370-00	Tension pulley	1
60	714-2003-81	Machine screw (M2×3)	1
61	714-2308-81	Machine screw (M2.3×8)	1
62	716-0485-00	Screw	1
63	714-2604-81	Machine screw (M2.6×4)	8
64	716-0429-00	Screw (for Head azimuth)	1
65	732-2604-11	Sems screw (M2.6×4)	2
66	743-1500-10	E-ring	14
67	743-4000-10	E-ring	1
68	744-0006-01	E-ring	1
69	746-0624-00	Washer	4
70	746-0628-01	Washer	14
71	743-2000-10	E-ring	2
72	750-1910-00	Spring	1
73	750-2134-00	Spring	1
74	750-2135-01	Spring	1
75	750-2136-02	Spring	1
76	750-2137-01	Spring	1
77	750-2138-01	Spring	1
78	750-2139-00	Spring	1
79	750-2140-02	Spring	1
80	750-2141-00	Spring	1
81	750-2142-02	Spring	1
82	750-2144-00	Spring	1
83	750-2145-01	Spring	1
84	750-2199-00	Spring	1
85	750-2147-01	Spring	2
86	750-2148-00	Spring	1
87	750-2149-01	Spring	1
88	750-2150-00	Spring	1
89	750-2151-03	Spring	1
90	750-2152-02	Spring	1
91	750-2155-00	Spring	1

■ CIRCUIT DIAGRAM:

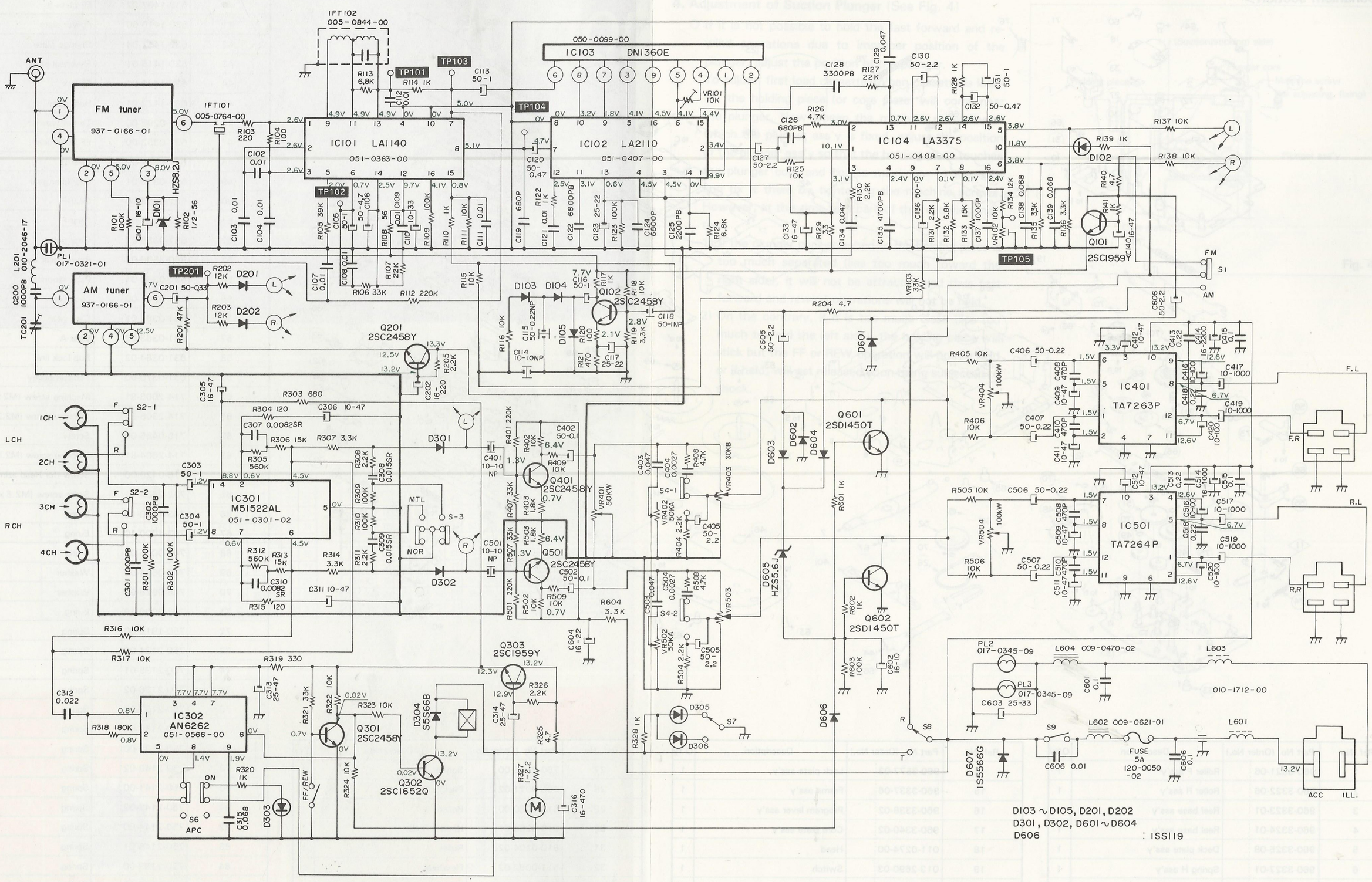

■ PRINTED WIRING BOARD:

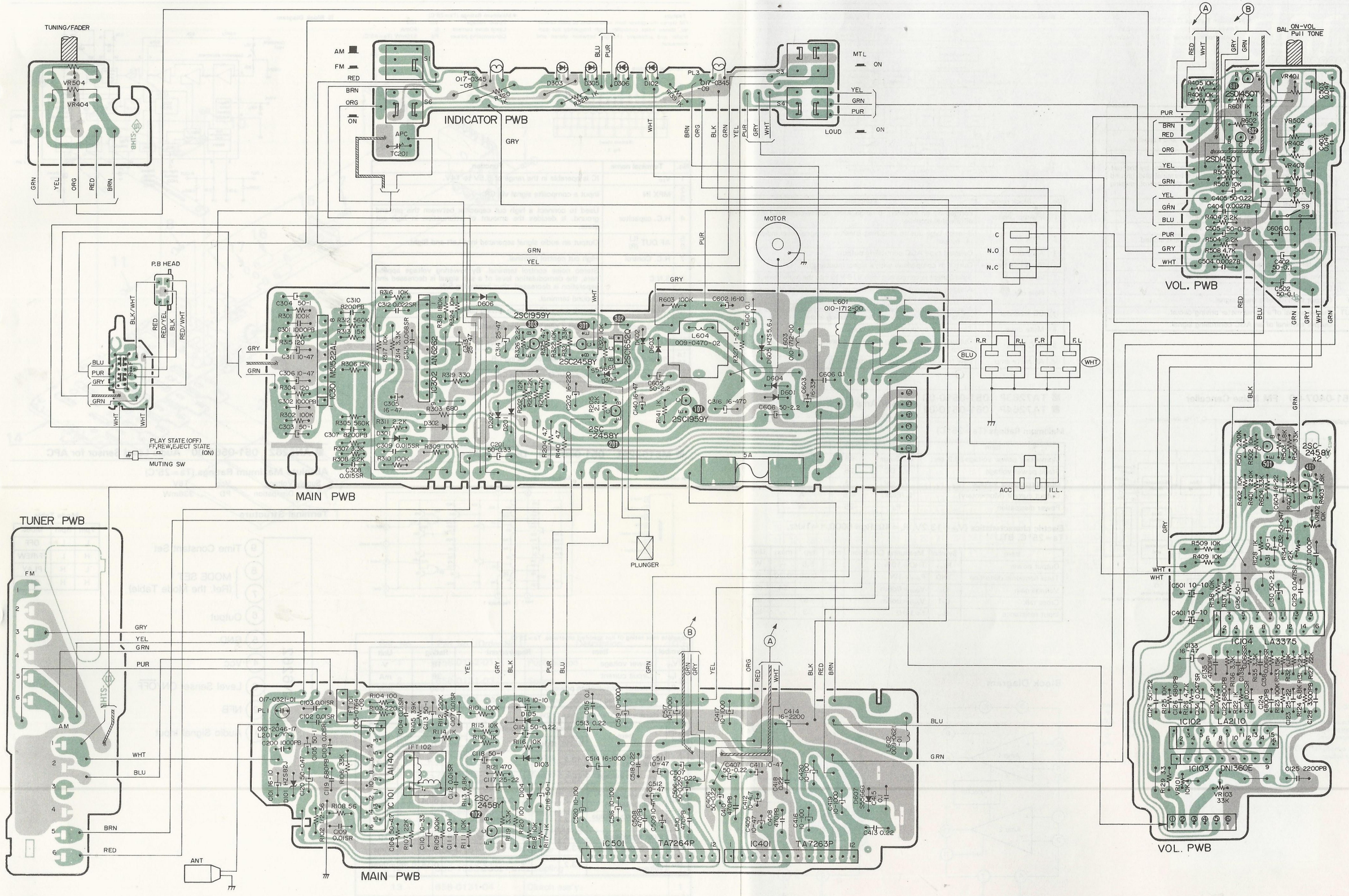

PT-7030F

■ EXPLANATION OF IC:

■ LA1140 051-0363-00 FM IF system

I Terminal structure

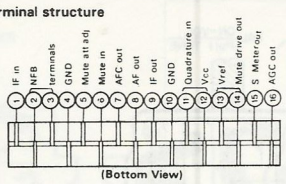

● **Maximum Ratings** (Ta = 25°C)

Power voltage	V_{CC}	16V
Consumpting power	Pd	640mW

No.	Terminal name	Function
1	IF input	Input IF.
2 3	NFB terminal	Form an NFB loop by connecting a resistor and capacitor.
4	GND	Ground terminal.
5	Mute att. adj.	Control the attenuating value during muting state by the use of the resistor connected between this terminal and ground terminal. By increasing the resistance of this control, muting is deepened.
6	Mute INPUT	Input terminal of a mute signal.
7	AFC OUT	Output terminal of an AFC control signal.
8	AF OUT	Output terminal of a low frequency signal.
9	IF OUT	Output terminal of an IF signal amplituted and limited.
10	GND	Ground terminal.
11	Quadrature in	Input terminal of a quadrature det. signal.
12	Vcc	Power supply terminal.
13	Vref	DC reference terminal.
14	Mute drive OUT	Output terminal of a mute signal.
15	Signal meter OUT	Output signal of a signal meter driving circuit.
16	AGC OUT	Output terminal of an AGC controlling signal.

II Block Diagram

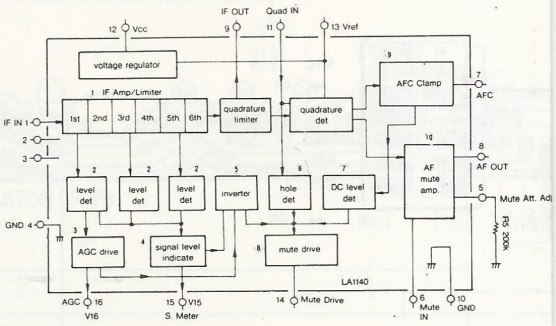

No.	Block name	Function
①	IF Amp/Limiter	Formed by an excellent 6-range AMR double-command type differential amplifier.
②	Level det	3-range type due to obtaining linearity of signal level indicate ④ output.
③	AGC drive	Delayed type AGC controlling output.
④	Signal level indicate	Output in comparison with a signal input (dB).
⑤	Inverter	Send current in comparison with V16-V15 into the mute drive ⑧.
⑥	Hole det	A signal is output when C/N (carrier to noise ratio) of a weak signal carrier is decreased.
⑦	DC level det	A signal is output when an AFC controlling output signal exceeds the specified level during detuning state.
⑧	Mute drive	The sum of outputs 5 to 7 is output.
⑨	AFC clamp	Output AFC controlling current. It also provides a ±0.7V clamp circuit.
⑩	AF mute amp	Low frequency preamplifier with muting function.

■ LA2110 051-0407-00 FM Noise Canceller

Block diagram of equivalent circuit

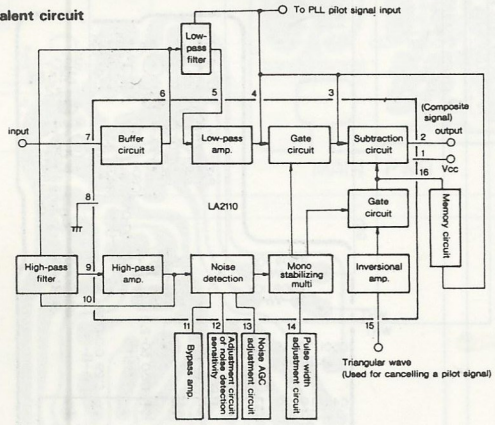

Maximum rating/Ta = 25°C				unit
Max. power voltage	Vcc max		16	V
Allowable consumption power	Pd max	Ta≦50°C	450	mW
Operating ambient temperature	Topg		−20~+75	°C
Storage ambient temperature	Tstg		−40~+125	°C
Recommended operating conditions/Ta = 25°C				unit
Recommended power voltage	Vcc		12	V
Power voltage range	Vcc		8~15	V

■ TA7263P 051-0510-00
■ TA7264P 051-0510-01 Power Amp.

Maximum Ratings (Ta = 25°C)

Item	Symbol	Rating	Unit
Momentary power voltage (0.2 sec)	V_{CC} Surge	45	V
Static power voltage	V_{CC} DC	25	V
Operating power voltage	V_{CC} opr	18	V
Output current (Momentary)	I_O (Peak)	4.5	A
Power dissipation	P_D	25	W

Electric characteristics (V_{CC} = 13.2V, R_L = 4Ω, Rg = 600Ω, f = 1kHz, Ta = 25°C, BTL)

Item	Symbol	Measuring Condition	min.	typ.	max.	Unit
Output power	P_{OUT}	THD = 10%	5	5.8	—	W
Total harmonic distortion	THD	P_{OUT} = 1W	—	0.06	0.30	%
Voltage gain	G_V	V_{OUT} = 0dBm	50	52	54	dB
Cross talk	C·T	V_{OUT} = 0dBm	—	−57	—	dB
Input resistance	R_{IN}	f = 1kHz	—	33	—	kΩ

Block Diagram

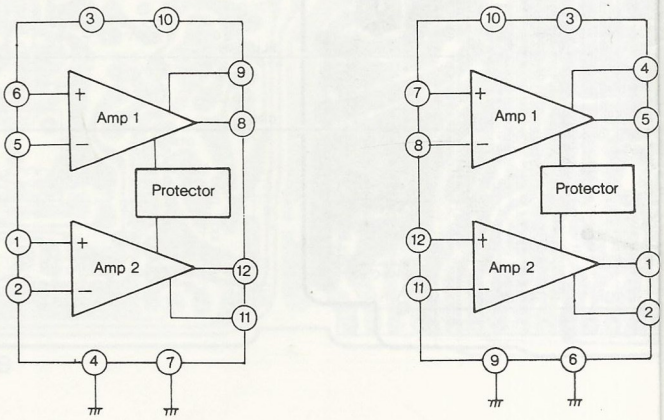

■ LA3375 051-0408-00 PLL FM MPX Stereo Demodulator

I Feature

FM stereo multiplexer built in functions as pilot canceller, stereo noise controller, high frequency cut controller and automatic changer between stereo and monaural.

● Maximum Ratings (Ta=25°C)

Power voltage	V_{CC}	16V
Lamp drive current	I_L	40mA
Consumpting power	Pd	520mW (Ta=45°C)

II Terminal structure

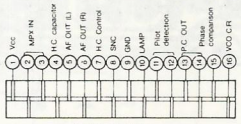

Fig. 1

No.	Terminal name	Function
1	V_{CC}	IC is operable in the range of 6.5V to 14V.
2 3	MPX IN	Input a composite signal via CR.
4	H.C. capacitor	Used to connect a high cut capacitor between this pin and ground. It decides the amount of attenuation in high cut state.
5 6	AF OUT (L) (R)	Output an audio signal separated into Left and Right.
7	H.C. Control	High cut control terminal.
8	S.N.C	Stereo noise control terminal. By lowering voltage applied here, the demodulation level of a sub signal is decreased and separation is decreased, thus improving S/N.
9	GND	Ground terminal.
10	LAMP	Absorb max. 40mA lamp driving current.
11 12	Pilot detection	Connect a pilot detecting capacitor.
13	P.C. OUT	Output a dummy triangle wave for canceling a pilot signal.
14 15	Phase comparison	Connect phase comparing CR.
16	VCO. C.R	Connect VCO oscillating CR.

III Block Diagram

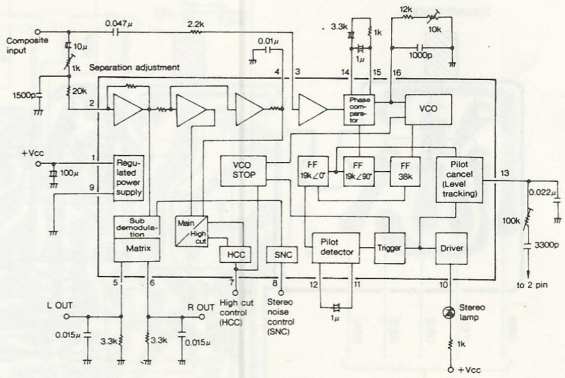

■ M51522AL 051-0301-02 Dual Pre. Amp.

Pin connection

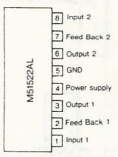

Equivalent circuit

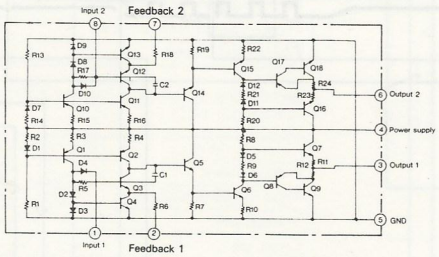

Absolute max rating (If not specified otherwise, Ta=25°C)

Symbol	Item	Requirement	Rating	Unit
V_{CC}	Power voltage		18	V
I_{CC}	Circuit current		36	mA
P_d	Internal consumption power		650	mW
Kθ	Heat reduced rate	Ta≥25°C	6.5	mW/°C

Electrical characteristics (Ta=25°C, Vcc=13.2V)

Symbol	Item	Measurement requirement			Rating			Unit
		V_{CC}(V)	f(kHz)		Min.	Typ.	Max.	
I_{CCO}	Circuit current in no signal state	13.2				4	7	mA
G_{vo}	Open loop voltage gain	13.2	1	V_0=0.77Vrms	70	83		dB
THD	Total higher harmonic distortion	13.2	1	V_0=0.77Vrms		0.04	0.2	%
G_{vc}	Closed loop voltage gain	13.2	1	V_0=0.77Vrms	43	45	47	dB
Zin	Input impedance	13.2	1	V_0=0.77Vrms	50	150		kΩ
Vom	Max output voltage	13.2	1	THD=1%	1.0	1.6		Vrms
No	Output noise voltage	13.2		Rg=2.7kΩ, Bw=20Hz~20kHz		0.18	0.36	mVrms

■ AN6262 051-0566-00 Audio Level Sensor for APC

Absolute Maximum Ratings (Ta=25°C)

Supply Voltage	Vcc	16V
Power Dissipation	PD	336mW

Terminal Structure

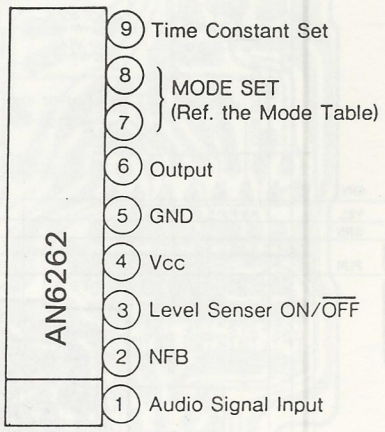

Mode Table

7pin	8pin	Mode
L	L	OFF
H	L	FF/REW
L	H	PLAY
H	H	OFF

■ EXPLODED VIEW•PARTS LIST:

<Tuner section>

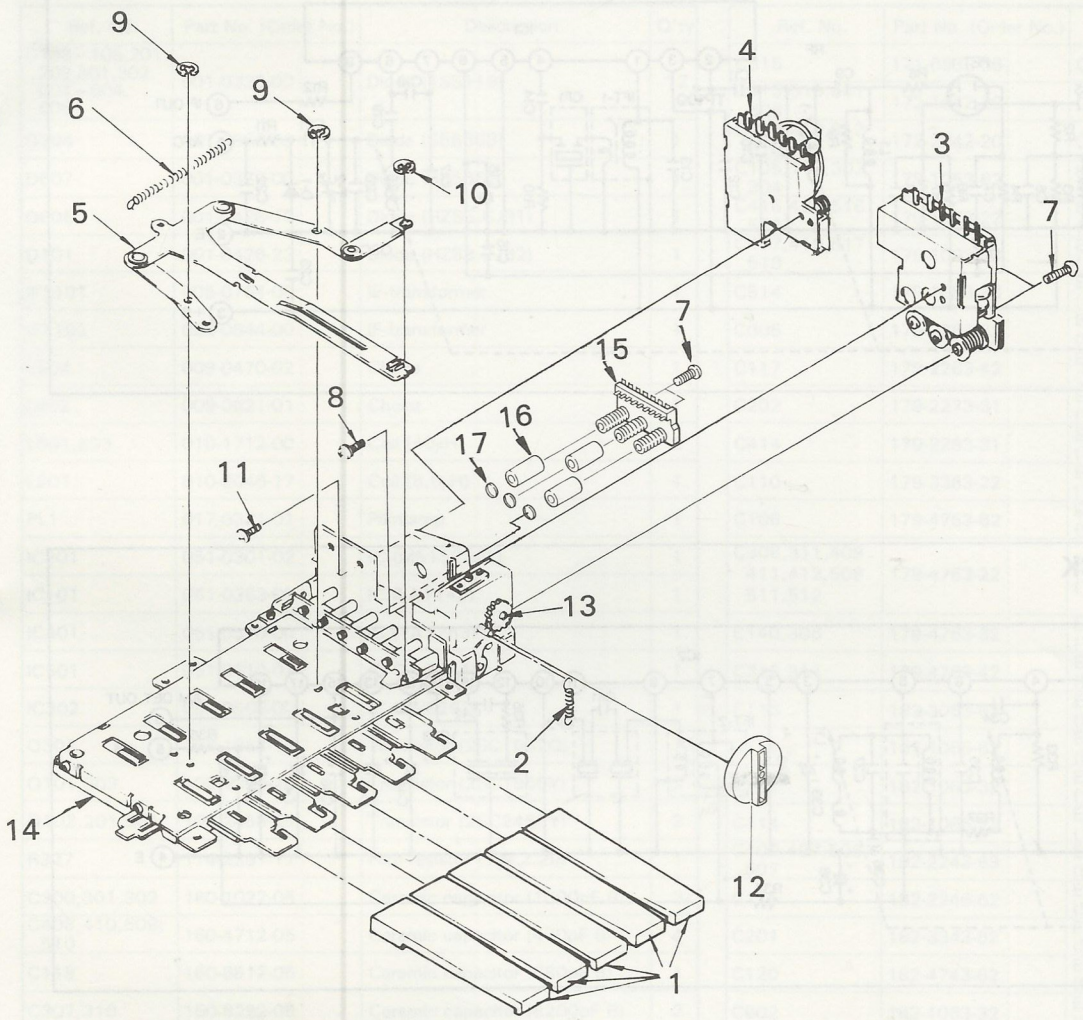

Ref. No.	Part No. (Order No.)	Description	Q'ty
1	658-0152-01	Push button	5
2	658-0131-03	Spring	1
3	658-0161-04	FM tuner pack	1
4	658-0161-05	AM tuner pack	1
5	658-0131-08	Pointer holder	1
6	658-0131-09	Spring	1
7	714-2008-11	Machine screw (M2×8)	4
8	714-2604-11	Machine screw (M2.6×4)	1
9	743-2000-00	E-ring (M2)	2
10	743-1200-00	E-ring (M1.2)	1
11	658-0161-10	Screw	2
12	335-1393-00	Coupling	1
13	658-0131-04	Clutch ass'y	1
14	658-0131-07	Mech ass'y	1
15	658-0161-07	AM coil ass'y	1
16	658-0161-08	Sleeve core	3
17	658-0161-09	O-ring	3

■ TUNER PACK CIRCUIT:

• FM TUNER PACK

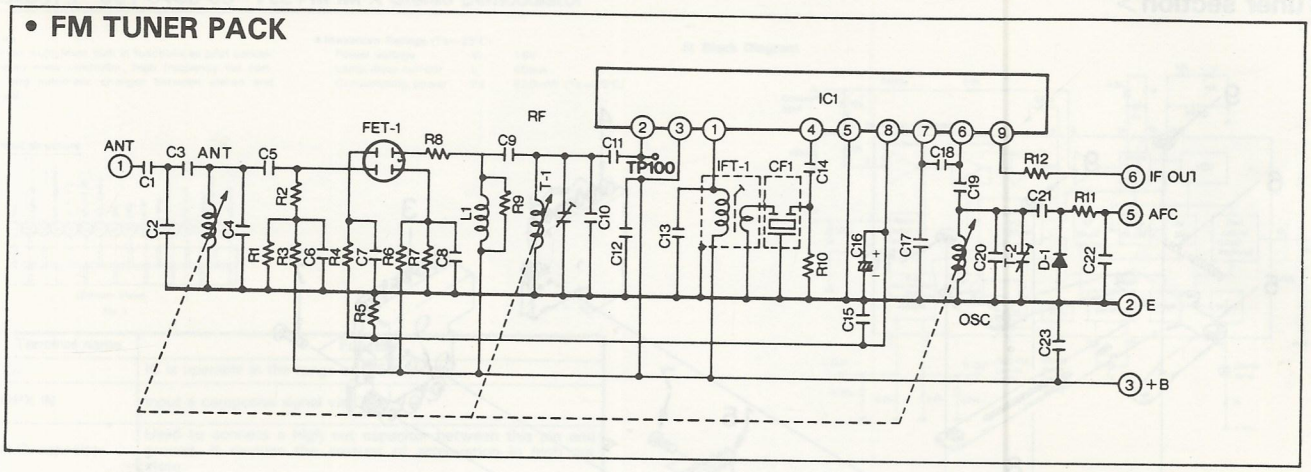

• AM TUNER PACK

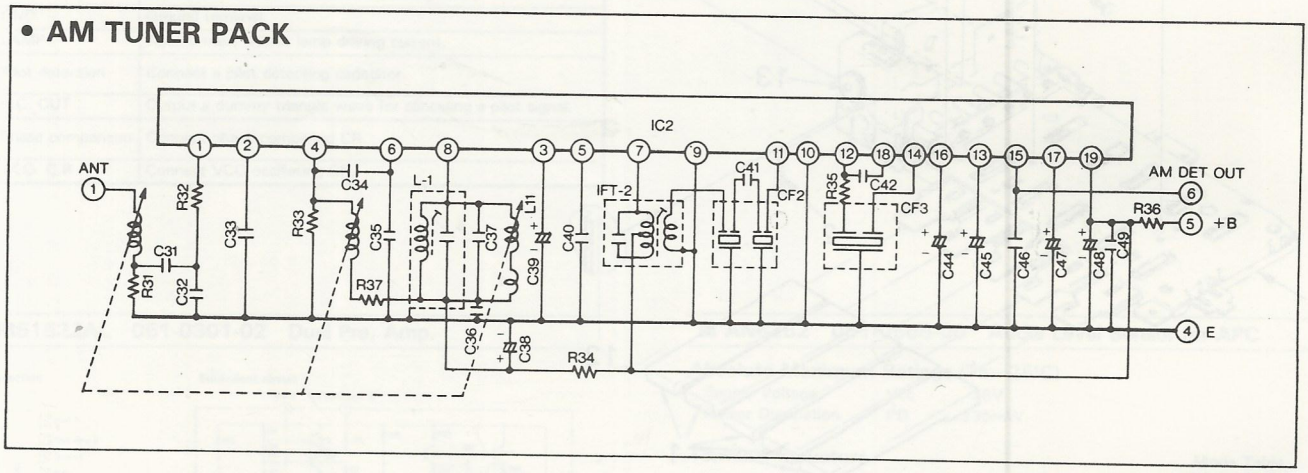

■ PARTS LIST:

<Electrical section>

• MAIN P.W.B.

Ref. No.	Part No. (Order No.)	Description	Q'ty
D103~105,201 202,301,302 601~604, 606	001-0330-00	Diode (1SS119)	12
D304	001-0360-00	Diode (S5566B)	1
D607	001-0379-00	Diode (S5566G)	1
D605	001-0426-19	Diode (HZS5.6JB1)	1
D101	001-0426-23	Diode (HZS8.2JB2)	1
IFT101	005-0764-00	IF-transformer	1
IFT102	005-0844-00	IF-transformer	1
L604	009-0470-02	Choke	1
L602	009-0621-01	Choke	1
L601,603	010-1712-00	Coil (40μH)	2
L201	010-2046-17	Coil (5.6μH)	1
PL1	017-0321-01	Pilotlamp	1
IC301	051-0301-02	IC (M51522AL)	1
IC101	051-0363-00	IC (LA1140)	1
IC401	051-0510-00	IC (TA7263P)	1
IC501	051-0510-01	IC (TA7264P)	1
IC302	051-0566-00	IC (AN6262)	1
Q302	102-1652-17	Transistor (2SC1652Q)	1
Q101,303	102-1959-25	Transistor (2SC1959Y)	2
Q102,201,301	102-2458-25	Transistor (2SC2458Y)	3
R327	114-2291-11	Film resistor (1W 2.2Ω)	1
C200,301,302	160-1022-05	Ceramic capacitor (1000pF B)	3
C408,410,508, 510	160-4712-05	Ceramic capacitor (470pF B)	4
C119	160-6812-05	Ceramic capacitor (680pF B)	1
C307,310	160-8222-05	Ceramic capacitor (8200pF B)	2
C102,103,104 107,108,109 111,112	171-1033-06	Ceramic capacitor (0.01μF SR)	8
C308,309	171-1533-06	Ceramic capacitor (0.015μF SR)	2
C312	171-2233-06	Ceramic capacitor (0.022μF SR)	1

Ref. No.	Part No. (Order No.)	Description	Q'ty
C315	171-6833-06	Ceramic capacitor (0.068μF SR)	1
C415,515,601 606	172-1042-20	Ceramic capacitor (63V 0.1μF)	4
C413,418,513 518	172-2242-20	Ceramic capacitor (63V 0.22μF)	4
C105,116,303 304	179-1053-62	Electrolytic capacitor (50V 1μF)	4
C416,420,516 520	179-1073-22	Electrolytic capacitor (10V 100μF)	4
C417,419,517 519	179-1083-23	Electrolytic capacitor (10V 1000μF)	4
C514	179-1083-33	Electrolytic capacitor (16V 1000μF)	1
C605	179-2253-62	Electrolytic capacitor (50V 2.2μF)	1
C117	179-2263-42	Electrolytic capacitor (25V 22μF)	1
C202	179-2273-31	Electrolytic capacitor (16V 220μF)	1
C414	179-2283-31	Electrolytic capacitor (16V 2200μF)	1
C110	179-3363-22	Electrolytic capacitor (10V 33μF)	1
C106	179-4753-62	Electrolytic capacitor (50V 4.7μF)	1
C306,311,409 411,412,509 511,512	179-4763-22	Electrolytic capacitor (10V 47μF)	8
C140,305	179-4763-32	Electrolytic capacitor (16V 47μF)	2
C313,314	179-4763-42	Electrolytic capacitor (25V 47μF)	2
C113	182-1053-62	Electrolytic capacitor (50V 1μF)	1
C118	182-1056-62	Electrolytic capacitor (50V 1μF NP)	1
C101	182-1063-32	Electrolytic capacitor (16V 10μF)	1
C114	182-1066-22	Electrolytic capacitor (10V 10μF NP)	1
C406,407,506 507	182-2243-63	Electrolytic capacitor (50V 0.22μF)	4
C115	182-2246-62	Electrolytic capacitor (50V 0.22μF NP)	1
C201	182-3343-62	Electrolytic capacitor (50V 0.33μF)	1
C120	182-4743-62	Electrolytic capacitor (50V 0.47μF)	1
C602	183-1063-32	Electrolytic capacitor (16V 10μF)	1
C606	183-2253-62	Electrolytic capacitor (50V 2.2μF)	1
C603	183-3363-42	Electrolytic capacitor (25V 33μF)	1
C316	042-0323-00	Electrolytic capacitor (16V 470μF)	1

• VOLUME P.W.B

Ref. No.	Part No. (Order No.)	Description	Q'ty
VR101,102	012-3808-06	Variable resistor (10kΩ)	2
VR103	012-3808-08	Variable resistor (33kΩ)	1
IC103	050-0099-00	IC (DN1360E)	1
IC102	051-0407-00	IC (LA2110)	1
IC104	051-0408-00	IC (LA3375)	1
Q401,501	102-2458-25	Transistor (2SC2458Y)	2
Q601,602	103-1450-20	Transistor (2SD1450T)	2
C137	143-1021-50	Polystylen capacitor (1000pF)	1
C125	160-2222-05	Ceramic capacitor (2200pF B)	1
C404,504	160-2722-05	Ceramic capacitor (0.0027μF B)	2
C128	160-3322-05	Ceramic capacitor (3300pF B)	1
C135	160-4722-05	Ceramic capacitor (4700pF B)	1
C126	160-6812-05	Ceramic capacitor (680pF B)	1
C122,124	160-6822-05	Ceramic capacitor (6800pF B)	2
C121	171-1033-06	Ceramic capacitor (0.01μF SR)	1

Ref. No.	Part No. (Order No.)	Description	Q'ty
C129,134,403 503	171-4733-06	Ceramic capacitor (0.047μF SR)	4
C138,139	171-6833-06	Ceramic capacitor (0.068pF SR)	2
C606	173-1032-10	Polyester capacitor (50V 0.01μF)	1
C136	179-1053-62	Electrolytic capacitor (50V 1μF)	1
C130	179-2253-62	Electrolytic capacitor (50V 2.2μF)	1
C123	179-2263-42	Electrolytic capacitor (25V 22μF)	1
C402,502	182-1043-62	Electrolytic capacitor (50V 0.1μF)	2
C131	182-1053-62	Electrolytic capacitor (50V 1μF)	1
C401,501	182-1066-22	Electrolytic capacitor (10V 10μF NP)	2
C405,505	182-2243-62	Electrolytic capacitor (50V 0.22μF)	2
C127	182-2253-62	Electrolytic capacitor (50V 2.2μF)	1
C604	182-2263-32	Electrolytic capacitor (16V 22μF)	1
C132	182-4743-62	Electrolytic capacitor (50V 0.47μF)	1
C133	182-4763-32	Electrolytic capacitor (16V 47μF)	1

• INDICATOR PWB

Ref. No.	Part No. (Order No.)	Description	Q'ty
D102	001-0207-00	Diode (RED)	1
D303	001-0207-02	Diode (YELLOW)	1
D305,306	001-0250-01	Diode (GREEN)	2

Ref. No.	Part No. (Order No.)	Description	Q'ty
TC201	004-1544-00	Trimmer	1
S1,3,4,6	013-3648-02	Switch	4
PL2,3	017-0345-09	Pilot lamp	2

*** Note: 179 — Small type**
182 — Super small type
183 — Ultra super small type

● How to read resistor

Resistors are deleted from the table of electric components, (except metal film resistors and special resistors). They can be converted to product Nos. as follors.

Film resistor (Carbon film resistor)

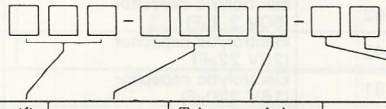

Classification	Resistance *	Tolerance of the value of resistance		Rated power			Shape	
1 1 1		0		0			0	
	Example	1	± 5 %	1	⅛W	Approx. 3.7mm	1	Horizontal
	33Ω=330	2		2	¼Ws	Approx. 6.5mm	2	Vertical
	33kΩ=333	3		3			3	
		4		4	½W	Approx. 9mm	4	
				7	⅙W	Approx. 3.5mm		
				8	½Ws	Approx. 6.6mm		
				9	¼Wss	Approx. 3.2mm		

(Example)

Film resistor ¼Ws 1kΩ ± 5 % Vertical

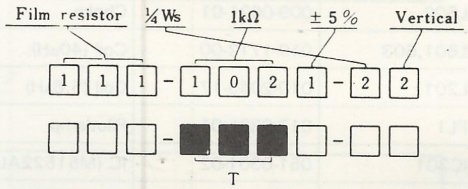

Note 1. The first two of three digits representing resistance are effective digits and the last one represents number of "0" following this.
Unit is given in ohm (Ω).

Example of conversion of resistance T

Note) R : Resistance, T : Converted value

R	T	R	T	R	T	R	T	R	T	R	T	R	T	R	T	R	T	R	T
Ω 0.1	108	Ω 1.0	109	Ω 10	100	Ω 100	101	kΩ 1.0	102	kΩ 10	103	kΩ 100	104	MΩ 1.0	105	MΩ 10	106	MΩ 100	107
0.15	158	1.5	159	15	150	150	151	1.5	152	15	153	150	154	1.5	155	15	156	150	157
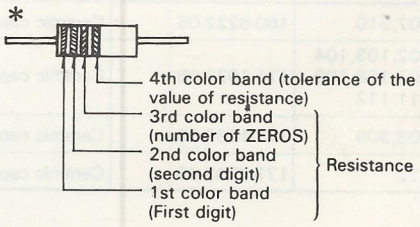
COLOR	BLK	BRN	RED	ORG	YEL	GRN	BLU	PUR	GRY	WHT	GOLD	SILVER	NO COLOR
1st color band	0	1	2	3	4	5	6	7	8	9			
2nd color band	0	1	2	3	4	5	6	7	8	9			
3rd color band	10^0	10^1	10^2	10^3	10^4	10^5	10^6				10^{-1}	10^{-2}	
4th color band											± 5 % (J)	±10% (K)	±20% (M)