DIAGRAM-A

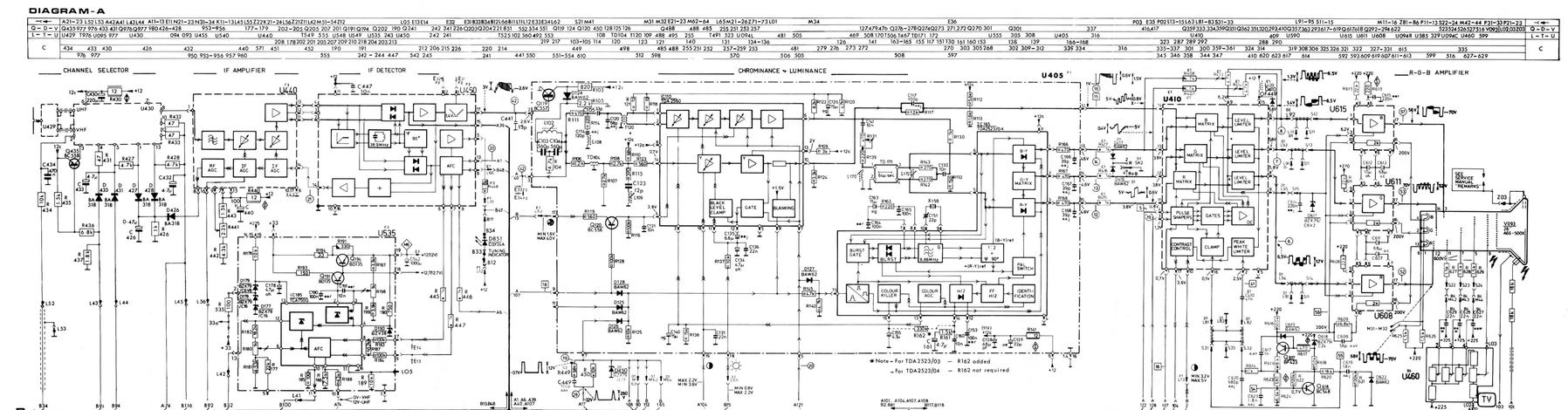

DIAGRAM B

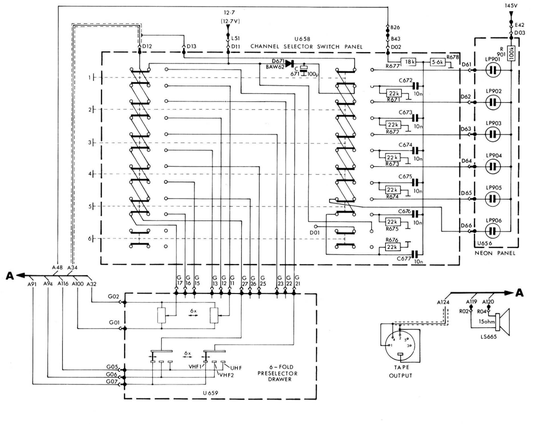

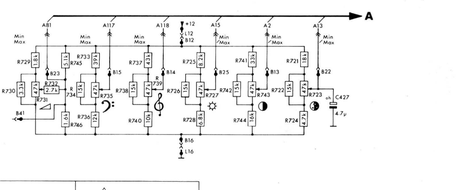

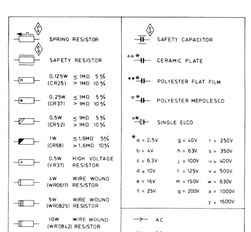

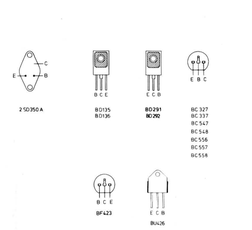

SUBJECT TO MODIFICATION

Model 02KJ658 3102 305 20872