DIAGRAM A

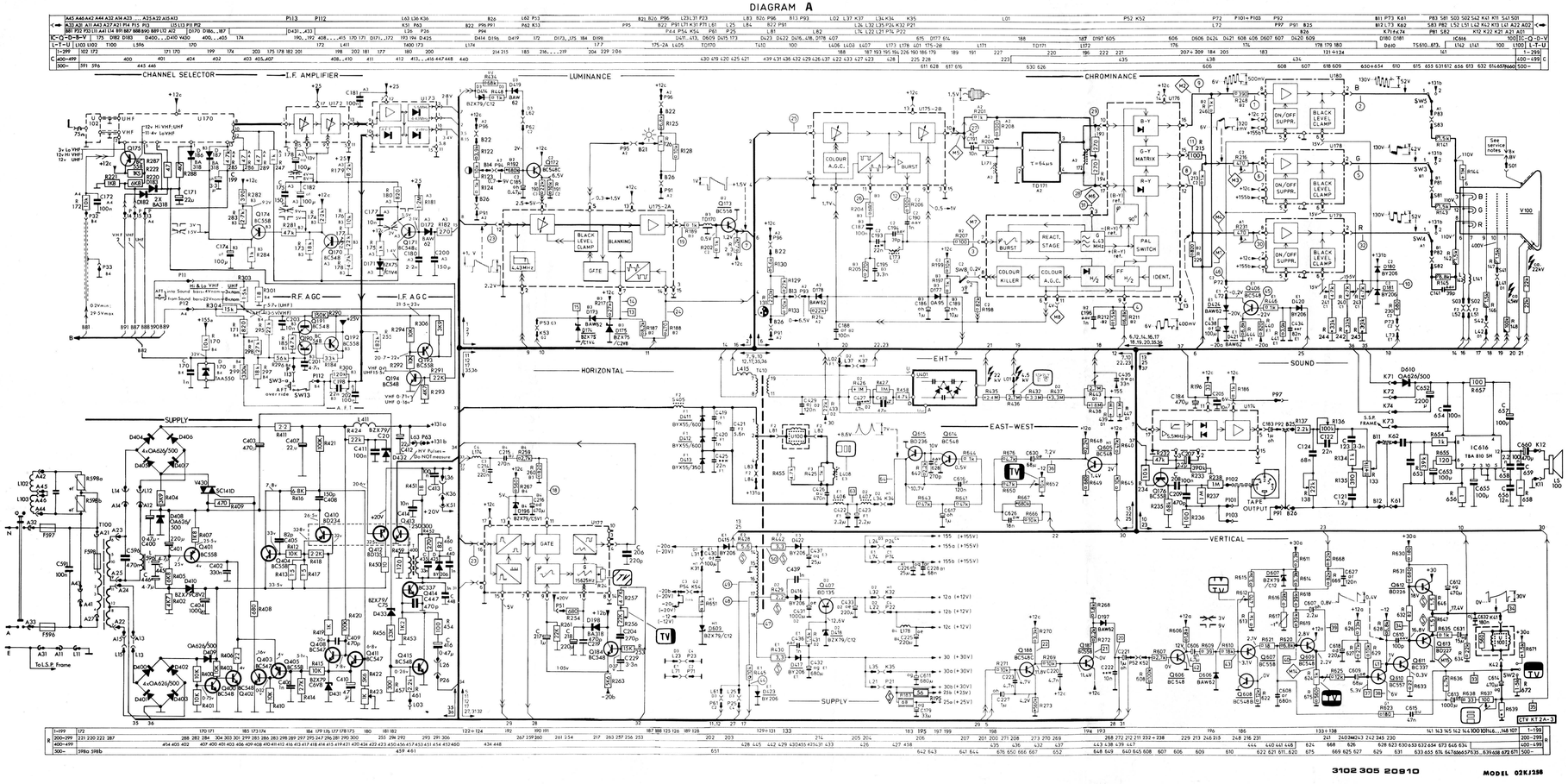
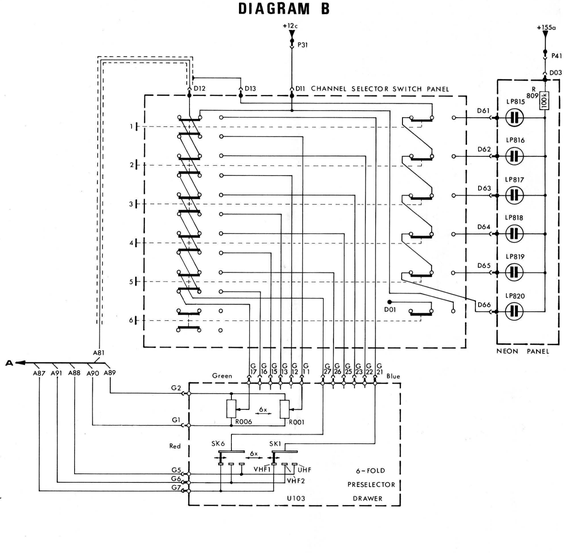
DIAGRAM B