Clarion

SERVICE MANUAL

Closer Relations through "CLARION SERVICE MANUAL"

MODEL PE-662A

MK. I

Fabricant: CLARION CO., LTD./Exportations: CLARION SHOJI CO., LTD.

3, Kojimachi 5-chome, Chiyoda-ku, Tokyo, 102 Japan Tel.: (265) 2931 Telex: J22908, J22152 CLARISHO

Succursales outre-mer:

CLARION SHOJI (EUROPA) G.M.B.H. 2000 Hamburg 76, Schöne Aussicht 35, West Germany. Tel.: 220-7667 Telex: 41214969

CLARION SHOJI CO., LTD. (U.S.A.) 5500 Rosecrans Ave., Lawndale, Calif., 90260 U.S.A. Tel.: 213-973-1100 Telex: 66-4447

CLARION CORPORATION OF AMERICA 5500 Rosecrans Ave., Lawndale, Calif., 90260 U.S.A. Tel.: 213-973-1100 Telex: 66-4447

CLARION CORPORATION OF AMERICA, EASTERN DIVISION 421 North Midland Ave., Saddle Brook, N.J. 07662 U.S.A. Tel.: 201-791-1200 Telex: 13805

CLARION (MALAYSIA) SDN. BHD. 9 1/2 m.s. Bayan Lepas, Penang, Malaysia Tel.: 897-206, 897-334 Telex: PG 255 (Penang)

CLARION DO BRASIL INDUSTRIA E COMERCIO LTDA. Caixa Postal 5033, Sao Paulo, Brasil Tel.: 32-5161 Telex: 3821123

CLARION (HONG KONG) CO., LTD. 225 Ping Chau Gallery, Ocean Terminal, Kowloon, H.K. Tel.: 3-675785 Telex: HK4922

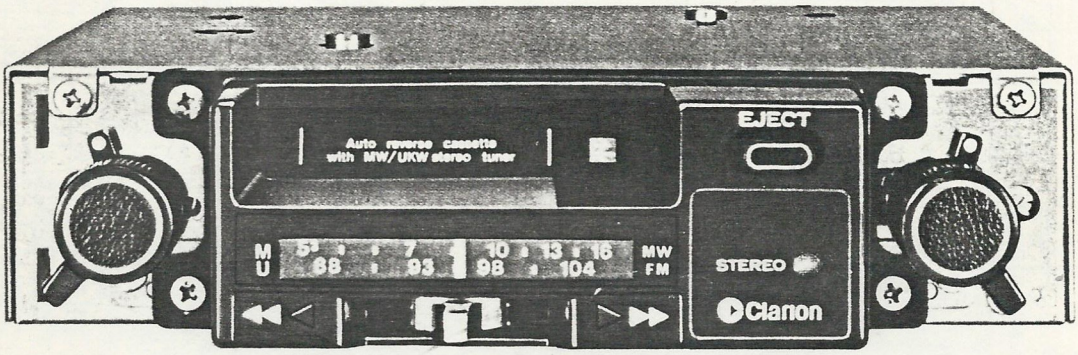

* SPECIFICATIONS:

○ Radio section

Circuit system:	Superhetero dyne
Tuning system:	AM Manual μ-tuning FM Manual μ-tuning
Receive range:	AM 530 to 1605 KHz FM 87.5 to 104 MHz
Intermediate frequency:	AM 452.5 KHz FM 10.7 MHz
Maximum sensitivity:	AM Better than 20dB FM Better than 10dB
Quieting sensitivity:	AM Better than 33dB (at 20dB S/N) FM Better than 15dB (at 30dB S/N)
Image rejection ratio:	AM More than 50dB FM More than 35dB
IF rejection ratio:	AM More than 40dB FM More than 60dB
Selectivity:	AM More than 20dB (±10KHz detune)
Limiting sensitivity:	FM Better than 30dB
A.F.C:	FM 400 ∿ 700 KHz
A.G.C:	AM More than 40dB
Separation:	FM More than 20dB
Fidelity:	AM 100Hz H +3 ±3dB L +6 ±3dB 4,000Hz H -18 ± 5dB L -28 ± 5dB FM 100Hz H +3 ± 3dB L +4 ± 3dB 7,000Hz H -12 ± 5dB L -27 ± 5dB

○ Tape section

Reproduction system:	4 track, 2 channel, 2 program stereo cassette tape player (Monaural tape playable)
Tape speed:	4.75cm/sec (17/8 pis)

Printed in Japan 298-1800-00

Wow and flutter:	Better than 0.44%
S/N:	More than 40dB
Cross talk:	More than 30dB (adjacent channel) More than 40dB (adjacent track)
Reproduction frequency range:	50Hz to 10000Hz
Automatic change time:	Less than 4 sec.

○ **Synthesis**

Power supply voltage:	DC 13.2V (10.8V to 15.6V) Negative ground
Current consumption:	Less than 1.5A (at max, output) Less than 4.5A (at plunger operated)
Load Impedance:	4Ω x2
Power output:	More than 4.0Wx2 (at 10% distortion) More than 6.0Wx2 (at max, volume)
Semiconductors:	5ICs, 16 transistor and 11 diodes
Weight:	2.1kg
Dimensions:	Width 177mm Height 44mm Depth 160mm

* FEATURES

○ **Auto reverse system with fast FF, REW**
An ultra small auto reverse system with fast forward and rewinding functions is employed.

○ **PLL IC**
A phase lock IC used in the FM MPX section assures high stability.

○ **Ceramic filter**
High selectivity is achieved by using ceramic filters in both AM and FM sections.

○ **One-directional start system**
It is so designed that when a cassette tape is inserted, always the upper track program is played.

○ **FF.REW tape end auto eject system**
Cassette is automatically ejected at the end of fast forward and rewinding and there is no need to depress the eject knob.

○ **Motor-driven antenna lead**
Since motor-driven antenna and radio switches are combined, antenna can operating the radio.

* COMPONENT VIEW:

920-1795-00 BOOKLET BAG

300-4976-00 Mounting bracket 1

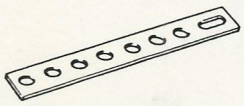

921-6261-00 Parts bag 1

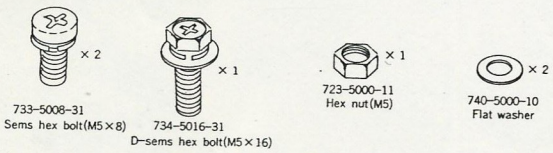

922-0781-00 Parts bag 1

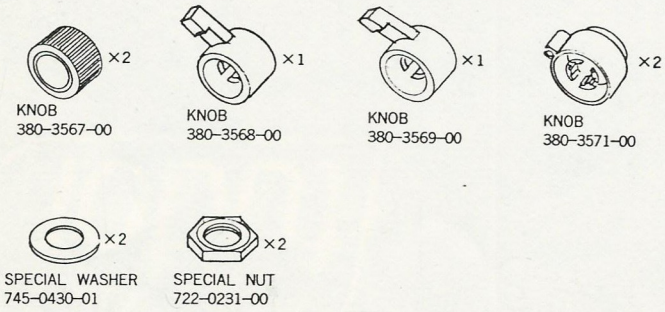

852-4649-00 Extension lead 1

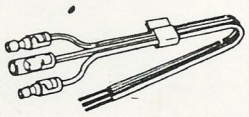

852-5115-00 Extension lead 1

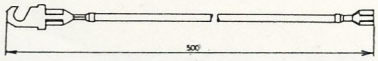

* Sold separately

922-0782-00 Parts bag 1

also
Can use
370-3011-00

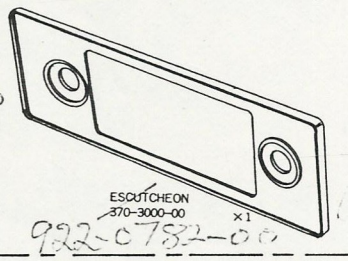

922-0782-00

922-0783-00 Parts bag 1

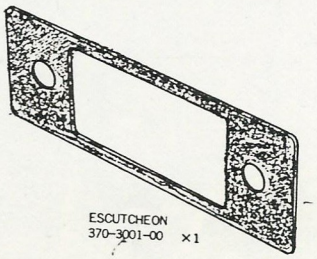

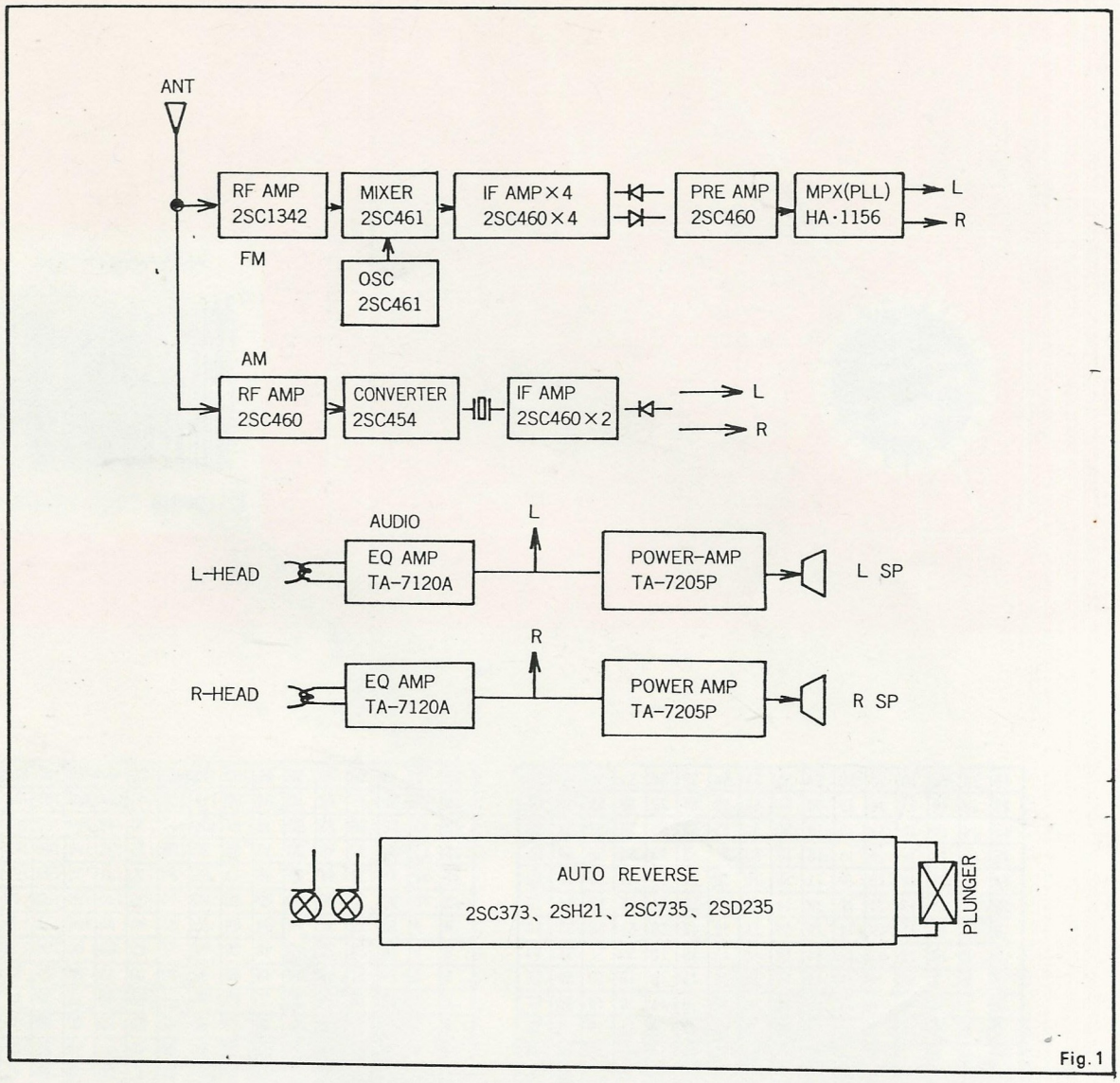

Fig. 1

* ADJUSTMENT:

o Radio section

1. Adjustment of AM Tuner

o Instruments required for AM adjustment

1. Sweep generator (452.5KHz)
2. AM SSG
3. Oscilloscope
4. Millivolt metter
5. Dummy antenna (See Fig. 2)
6. Dummy load (4Ω resistor or speaker)

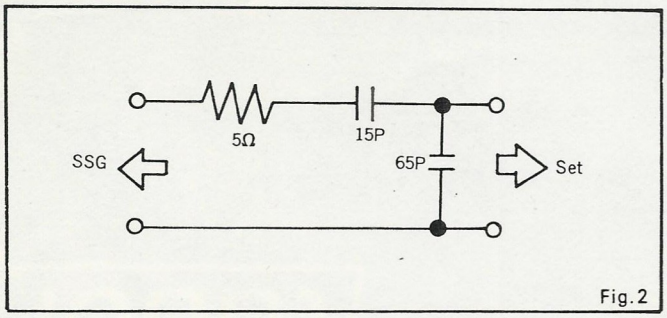

Fig. 2

1-1 Adjusting IF section

1) Make connections as shown in the above Fig. 3 and set the dial pointer to the right end (maximum frequency point) of the dial, Volume control to maximum and Tone control of maximum.

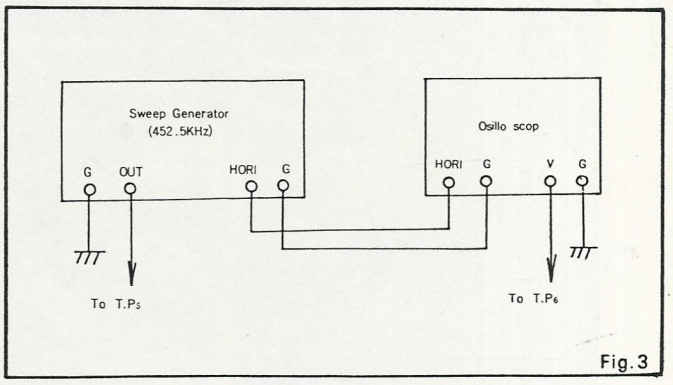

Fig. 3

2) Adjust by turning the cores of IFT201, 202 so that the height of waveform becomes maximum with good symmetry, as shown in the right Fig. 4.

At this time, keep the output of the sweep generator as low as possible.

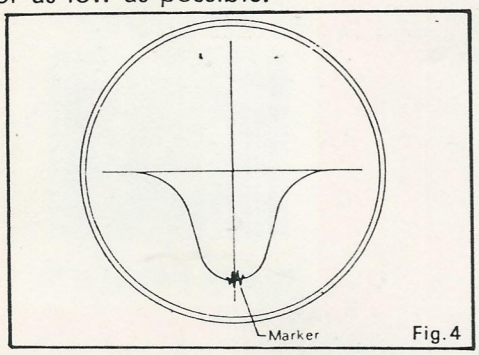

Fig. 4

1-2 Tracking Adjustment of RF Section

1) Setting frequency band width

Keep the dial pointer of the set at the right end of the dial, feed 1660KHz signal from AM SSG through ANT, and turn TC203 to receive this signal. Next bring the dial pointer to the left end, set the SSG to 520KHz, and turn the core of L202 to receive this signal.

Repeat the above operation 2 ~ 3 times until the receiving band width becomes 520 ~ 1660KHz.

2) ANT, RF adjustment

Set the AM SSG to 1400KHz and receive this signal on the set. Now adjust by turning the trimmers TC201 (ANT trimmer), TC202 (RF trimmer) so that the output becomes maximum. At this time, keep the output of SSG as low as possible, Vol. control to max. and Tone control to max.

2. Adjustment of FM Section

o Instruments required

1) FM SSG
2) Sweep generator (10.7MHz)
3) Oscilloscope
4) AC voltmeter (DB meter, etc.)
5) Dummy load (4Ω resistor or speaker)
FM stereo modulator

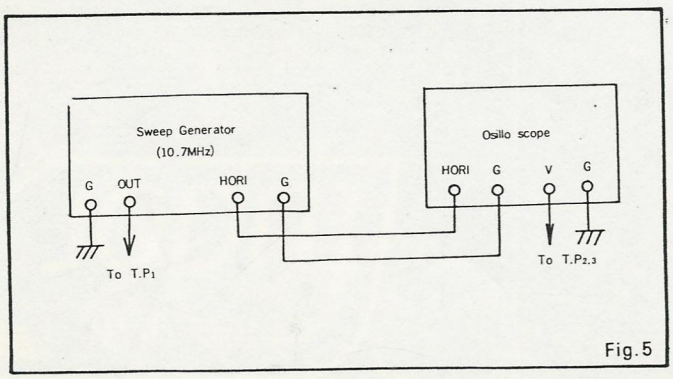

Fig. 5

2-1 Adjusting IF section

1) Make connections as shown in the above Fig. 5 bring the dial pointer of the set to the right end (maximum frequency point), Vol. control to max. and Tone control to max.

2) Adjust by turning the core of IFT101 so that the waveform becomes maximum height with good symmetry. Next turn the primary side core of IFT103 so that the waveform becomes maximum height.

(See below Fig. 6)

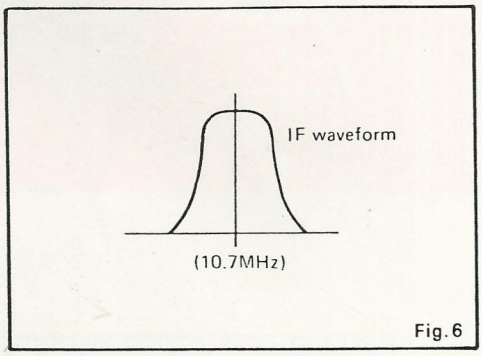

Fig. 6

At this time, adjust the center frequency to the resonance frequency of the ceramic filter. This frequency is indicated on ceramic filter by color code.

3) Next perform S curve adjustment while observing TP3 waveform. Adjust by turning the secondary side core (black) of IFT103 to obtain a waveform having good symmetry and good linearity, as shown in the below Fig. 7.

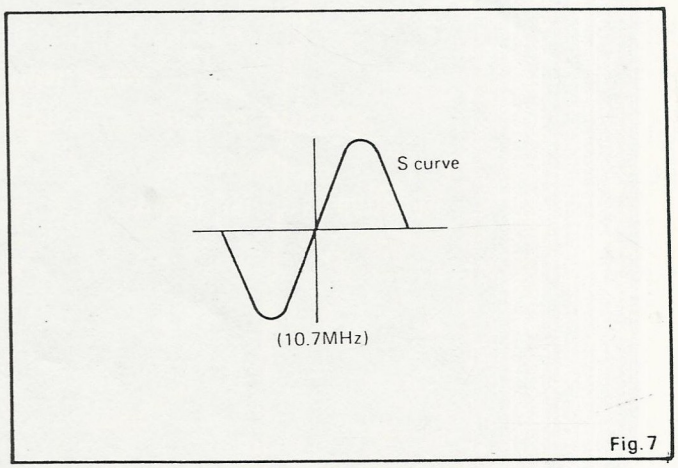

Fig. 7

2-2 Tracking adjustment of RF section

1) Setting band width

Keep the dial pointer of the set to the left end (minimum frequency point), feed 87.5 MHz signal from FM SSG though ANT, and turn the OSC trimmer TC103 to receive this signal.

2) ANT, RF adjustment

Set the SSG to 98MHz, and receive this signal. Now adjust by turning the ANT trimmer TC101 and RF trimmer TC102 so that the output becomes maximum. At this time, keep the output of SSG as low as possible.

2-3 Adjustment of Multiplex section

1) Adjusting VCO

This adjustment is for adjusting the frequency of the voltage controlled oscillator (VCO).

First set the ST-MO switch to MO (monoral).

Connect TP4 to the Vertical terminal of oscilloscope and calibrated 19KHz signal (calibration use signal of Stereo Modulates) to the Horizontal terminal.

Now adjust the semifixed potentiometer VR102 so that the Lissajuous figure does not move.

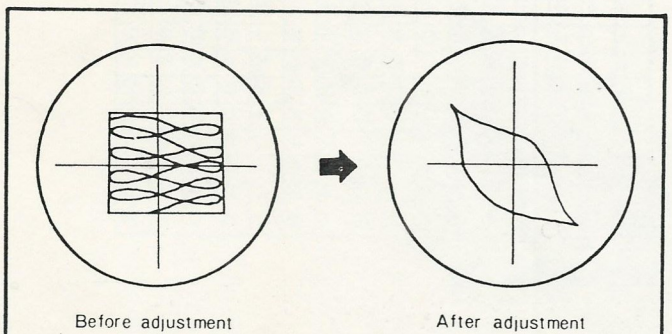

Fig.8

NOTE: The Lissajuous figure will not become a circle because of sine wave and square wave.

2) Adjusting stereo indicator lighting sensitivity

Connect the output of the stereo modulator to the External Modulation terminal of the FM SSG and set to specified modulation depth. Set the ST-MO switch to ST (stereo). Now set the SSG output to 15dB and adjust the semifixed potentiometer VR101 so that indicator lamp just lights.

NOTE: The indicator sensitivity adjustment must be performed after VCO adjustment.

⊙Tape Section

1. Adjustment of Gain

When difference between left and right outputs is large, this can be adjusted by means of the gain adjusting controls.

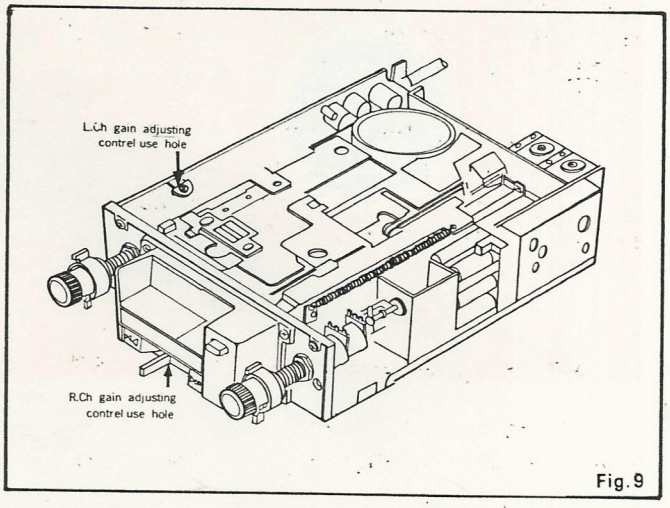

Fig.9

Set the Vol. control to max. and Tone control to max., insert −15VU 333Hz tape, and adjust so that the left and right outputs become equal within 2 ~ 4V range.

⊙Mechanism Section

1. Adjusting head azimuth

Incorrect head azimuth with respect to the tape is one of the causes of bad quality of sound and crosstalk. When the head azimuth is not correct, adjust according to the following procedure.

1) Play the test tape 333Hz-15VU, set the volume control to Max. and obtain balance by the balance control.

2) Next play the test tape 6.3KHz – 10VU and adjust by turning the head azimuth adjusting screw so that the output level becomes close to maximum in both forward and reverse directions.

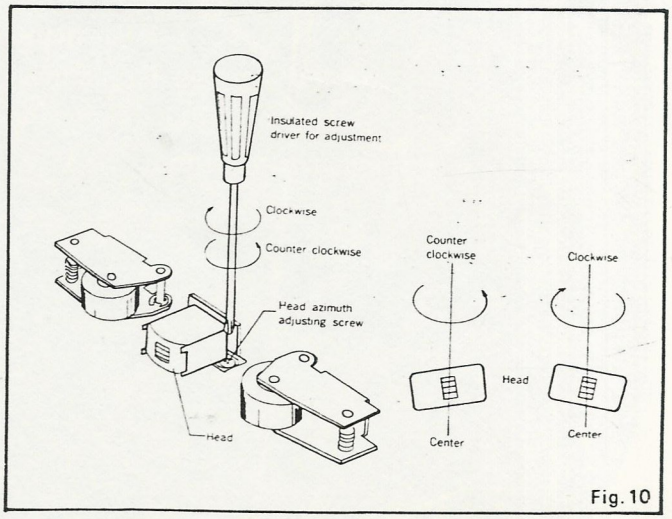

Fig.10

2. Adjusting pinch roller pressure

1) Measuring method

With the mechanism in playback state, pull the pin attached to the pinch roller mount in the direction shown by arrow in the Fig. 11 using a tension gauge and measure the tension when the pinch roller separates from the capstan. If the tension at this time is found to be 220g ~ 280g, it is normal.

2) Adjusting method

Adjust by bending the spring as shown in the Fig. using radio use pincers.

If adjustment is not possible, replace the prings 750-1684-00, 750-1685-00.

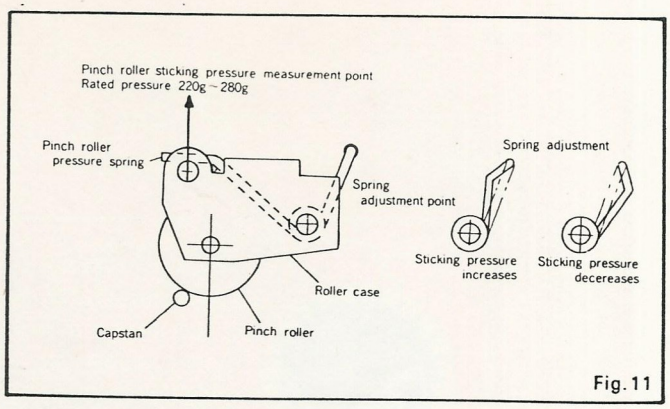

Fig. 11

3. Adjusting head selector switch 013-3066-00

When faults like crosstalk, no sound on one channel, simultaneous lighting of (tape) running indicator lamps, etc. are found on reverse drive to be caused by faulty switch contact, adjust by loosening the fixing screws of the printed board on which the switch is mounted and shifting the printed board to the left or right.

After completing the adjustment, fix the screws by screw lock.

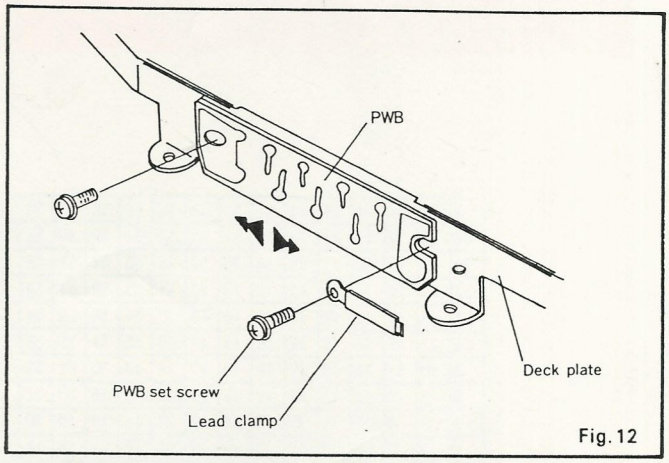

Fig. 12

4. Adjusting the plunger

When faulty switching operation is found to be caused by faulty plunger position, this can be adjusted by loosening the two screws with which the plunger is mounted and shifting the plunger forward or backward. After adjusting, check the switching operation in both forward and reverse directions and fix the screws by screw lock.

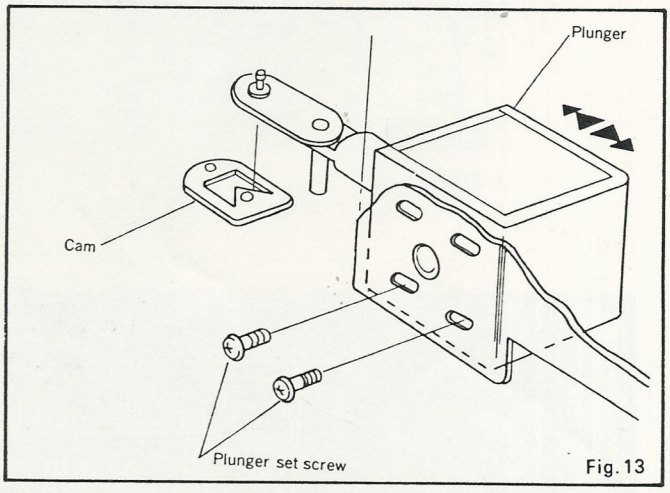

Fig. 13

5. Method of replacing motor

1) Disconnect the power cord of the motor from the printed board using a soldering iron.

2) Remove the 3 screws with which the motor is fixed.

3) Remove the fixing screw of motor pulley and take off the pulley.

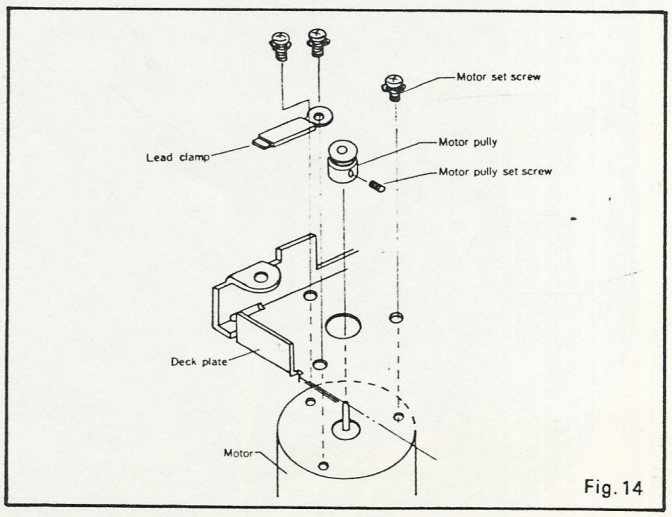

Fig. 14

6. Method of Removing Parts Concerning Pack Guide Ass'y

6-1 Removing side pannel Ass'y (960-2933-00)

1) Remove the spring (750-1680-00)

2) Remove the two machine screws (714-2603-81)

3) Remove the side pannel Ass'y (960-2933-00)

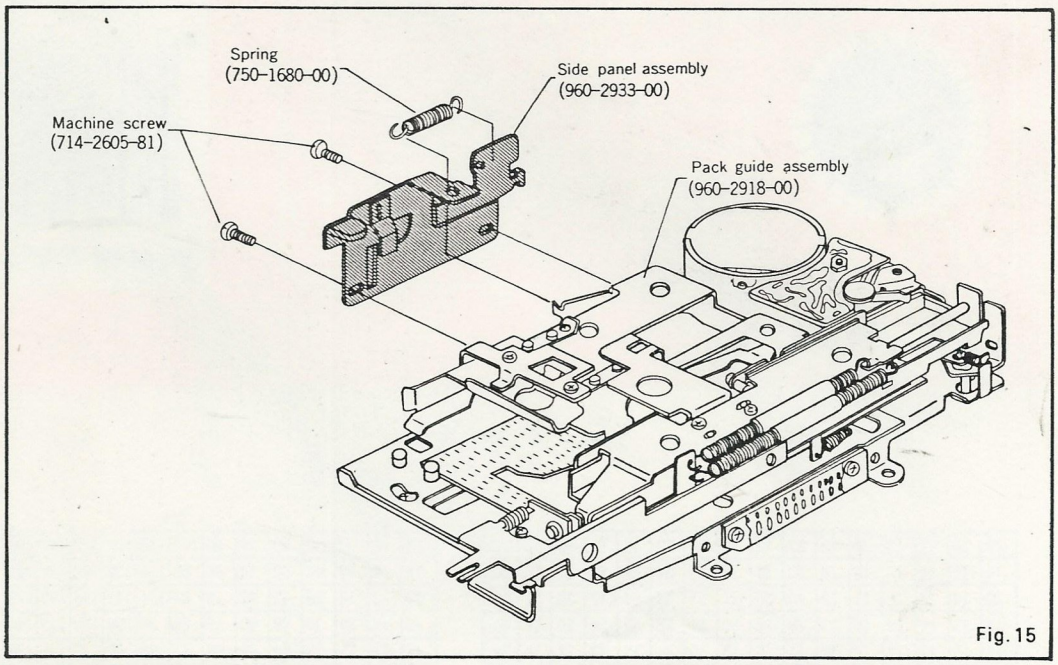

Fig. 15

6-2 Method of Removing Pack Guide Ass'y (960-2918-00)

1) Turn the pack guide Ass'y (960-2918-00) at right angles (in the same horizontal) as shown in Fig. 16

2) Next turn the pack guide Ass'y (960-2918-00) in the vertical direction and take off through the head slot of the reel bade Ass'y (960-2926-00)

NOTE: At this time be careful not to scratch the front surface of the head.

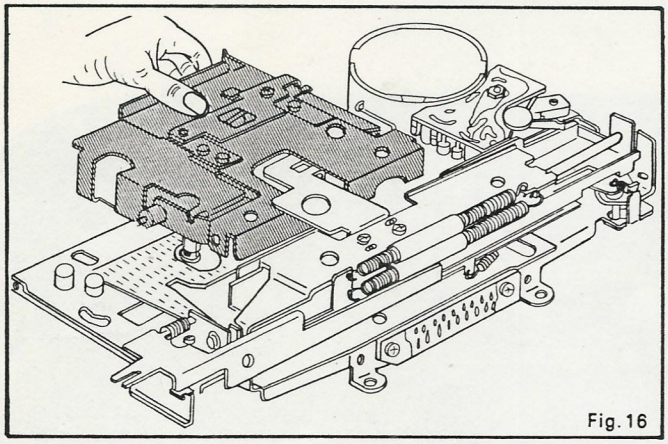
Fig. 16

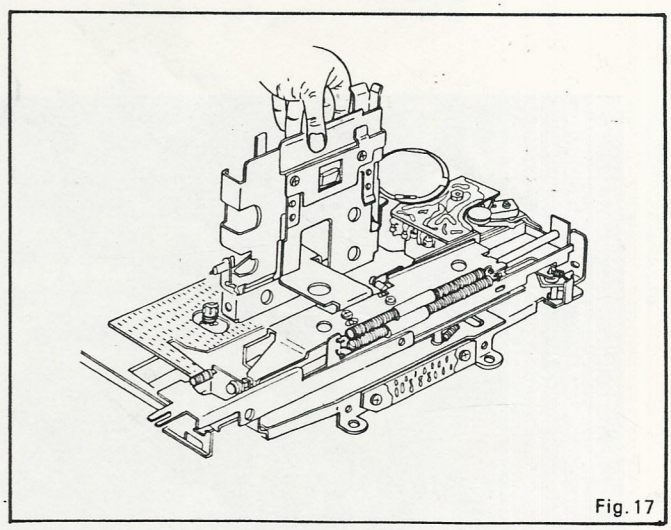
Fig. 17

6-3 Method of Removing Eject Mechanism

1) Remove the 3 machine screws (714-2605-81).

2) Lift the eject mechanism and take it off as a whole.

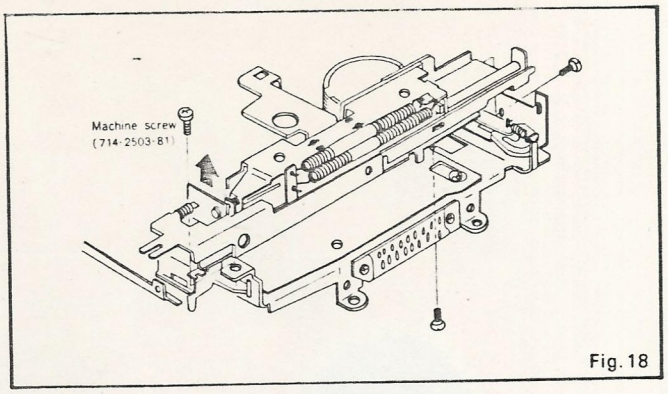

Fig. 18

7. Method of Installing Parts Concerned with Pack Guide Ass'y

7-1 Installing Eject mechanism

1) Set the head plate (960-2917-00) to OFF position.

2) Set the arm (631-0173-00) to the front side.

3) Set the change plate (630-0865-00) to the Forward side.

4) Set the eject mechanism for inserting pack.

5) Insert the protruding part of the eject mechanism into the square hole of the deck and mount the mechanism to the deck plate Ass'y (960-2912-00) with machine screw Ⓐ so that the change plate come to the front side of the protruding part of the lock plate (630-0861-00) and the select lever (630-0859-00) goes to the back side of the arm.

6) After mounting, check the relative positions of select lever and arm, and plunger and lock plate; depress the head lever with finger and set the head plate to ON position.

7) Set the eject mechanism to OFF state.

7-2 Installing pack guide

Perform the operation of 6-2 in the reverse order.

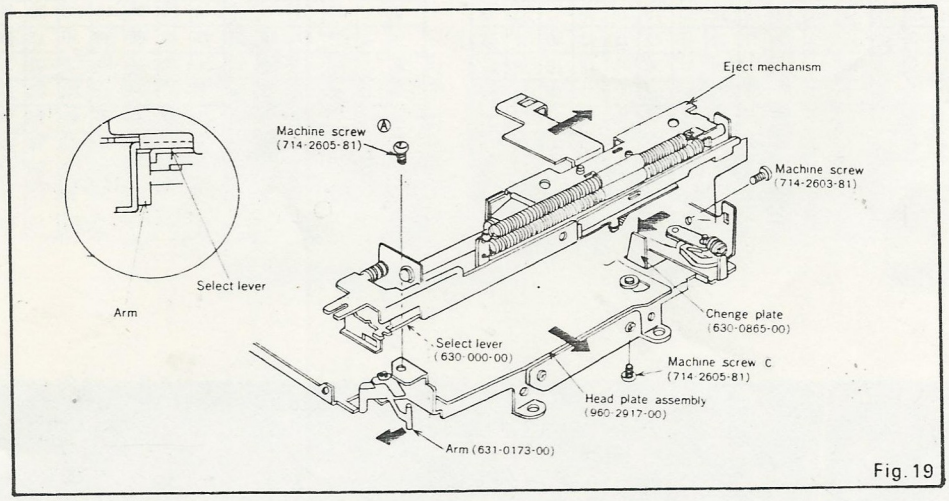

Fig. 19

7-3 Installing side pannel Ass'y (See Fig. 20)

1) Raise the front side of the side pannel a little upward and inser the pin (632-0536-00) into the hole of the guide arm (960-2919-00).

2) Return the side plate parallel to the mechanism.

At this time, make sure that the curved part fo the guide plate (630-0864-00) at the top of pack guide is in the square hole of the side plate.

3) Temporarily fix the mounting screw. (CAUTION: Never use any other mounting screw except 714-2603-81)

4) Next set the eject mechanism for inserting pack, without inserting the pack.

5) Adjust by shifting the side plate forward or backward so that the carved mark of the pack guide comes in the center of the two carved marks of the deck plate and securely tighten the screw.

6) Attach the spring (750-1680-00).

7) Insert the pack and check the eject operation.

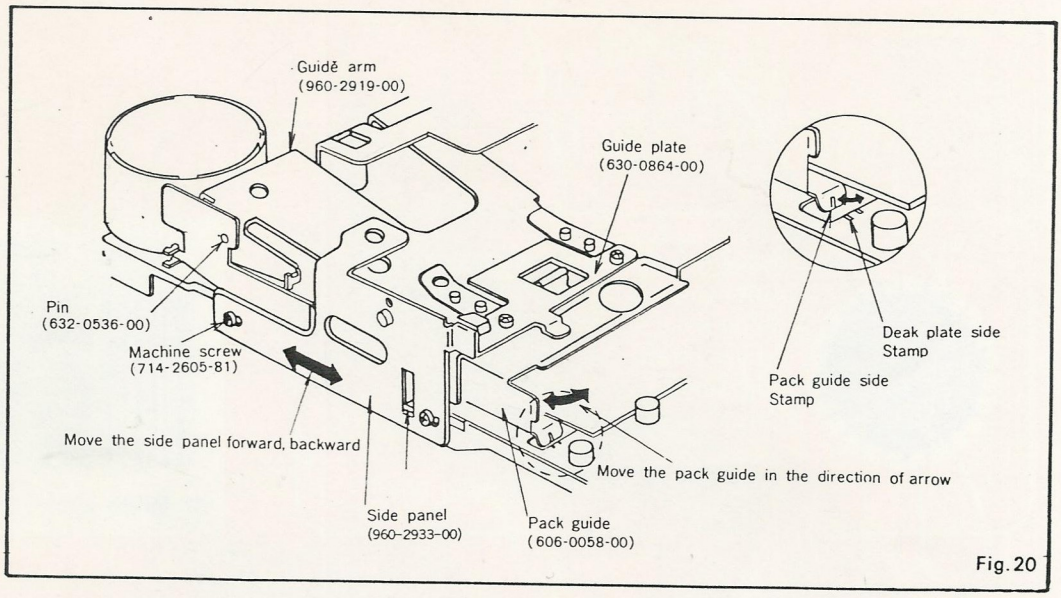

Fig. 20

8. Method of Adjusting Guide Plate

Perform this adjustment when pack insertion is bad and operation is erroneous or eject operation is incomplete.

1) Insert the pack and loosen the screw with which the guide plate (630-0864-01) of the pack guide is fixed. Next drop the pack by slightly pressing it with finger, set the guide plate in the center of the play (clearance) by moving it forward and backward, and tighten the screw.

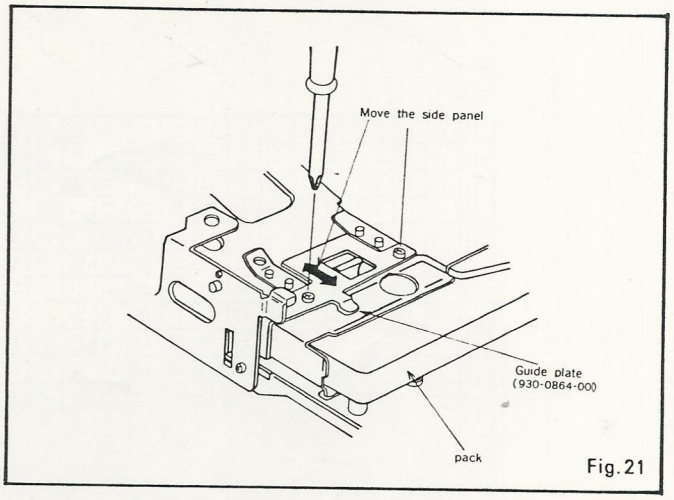

Fig. 21

9. Method of Adjusting FF Plate

Perform this adjustment when due to erroneous autoeject operation the pack is not ejected at FF or REW.

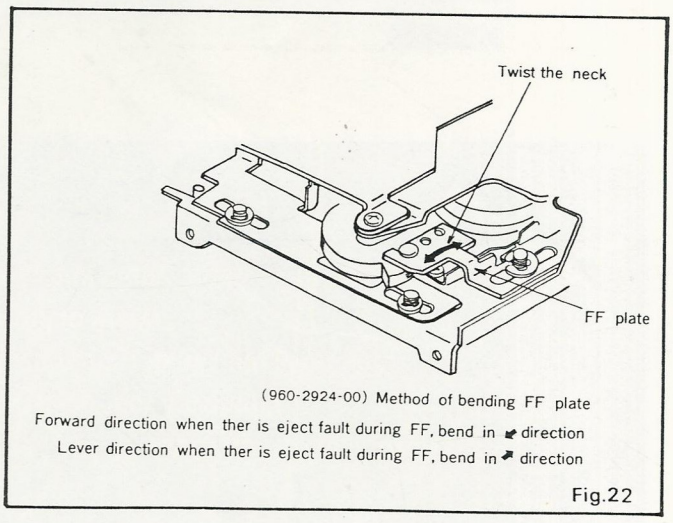

Fig.22

＊Metod of Removing Tape Mechanism

1) Take off the upper case.
2) Remove tuner printed board and pre main printed board.
3) Remove the 4 screws (See Fig.24) of the set bottom and remove the tape mechanism by lifting white pulling to the rear of the set. Howover, care should be taken because there is wiring.

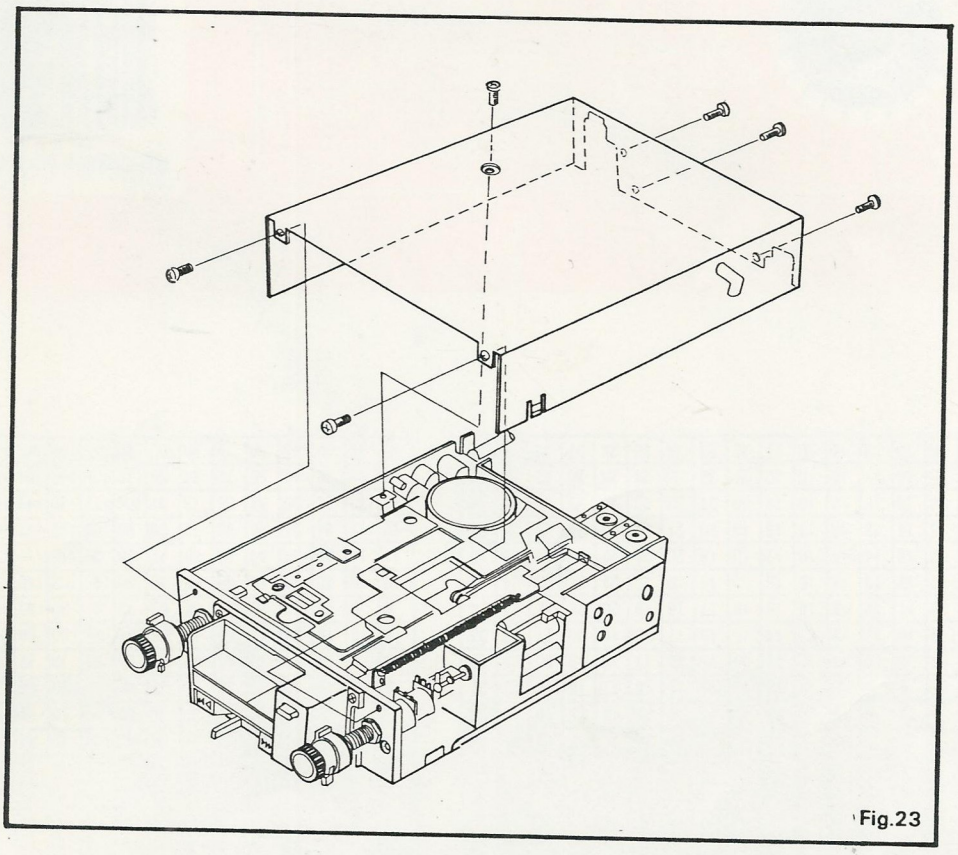

Fig.23

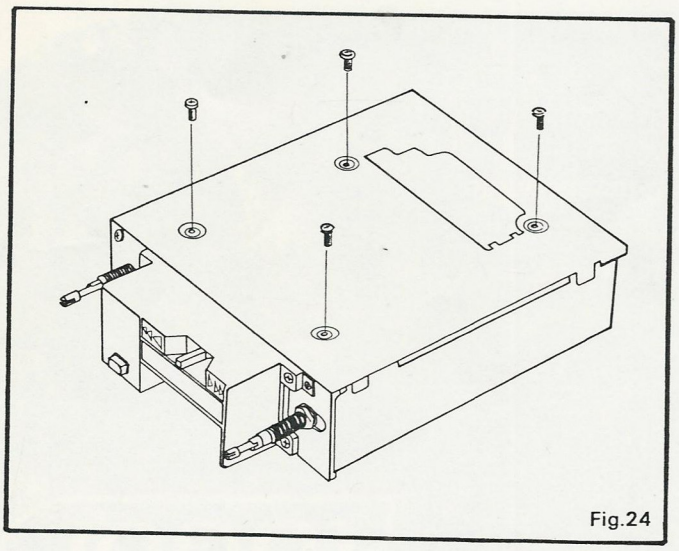

Fig.24

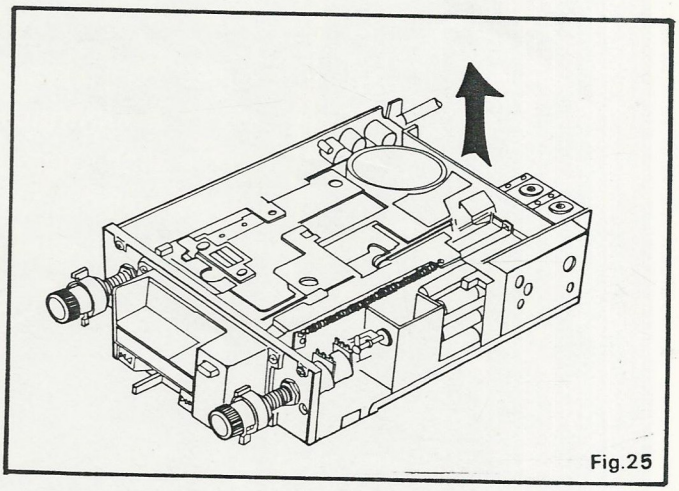

Fig.25

* TROUBLESHOOTING:

⊙AM Section

Symptom	Defective point and cause	Corrective action
No sound	○ Transistor Q201 ~ 204 faulty ○ IFT 201, 202 open ○ Tuning coil (RF·OSC) open ○ R210, 223 open	Replace " " "
Volume is low Distortion Sensitivity is poor	○ Adjustment faulty ○ Tuning ANT coil open ○ Transistor Q201 ~ 204 deterioration ○ TC201 ~ 203 short ○ D201, 202 deterioration ○ R221 faulty ○ Coil L202 open	Readjust Replace " " " " "
Oscillates	○ C203, 204, 207, 211 faulty ○ R202, 219 faulty	Replace "

⊙FM Section

Symptom	Defective point and cause	Corrective action
No sound	○ Transistor Q101 ~ 108 faulty ○ IC101 faulty ○ Tuning coil open ○ IFT 101, 103 open ○ Coil L102 open	Replace " " " "
Volume is low Distortion Sensitivity is poor	○ Trimmer TC101 ~ 103 faulty ○ Transistor Q101 ~ 108 deterioration ○ Adjustment faulty ○ Diode D102, 103 deterioration ○ R136 ~ 139 faulty ○ IC101 faulty	Replace " Readjust Replace " "
Oscillates	○ C105, 106, 112, 122, 125, 126, 128, 131, 116, 117 faulty ○ C103, 104, 107, 110 faulty	Replace "
Separation is bad	○ IC101 deterioration ○ C133, 135, 137 faulty ○ R141 faulty	Replace " "
Indicator does not light	○ VR101, 102 adjustment faulty ○ ST-MO switch faulty ○ C136, 139 capacity down ○ IND, lamp open ○ R149 open ○ IC101 faulty	Readjust Replace " " " "

⊙Tape Section

Symptom	Defective point and cause	Corrective action
One channel (or both channels) does not work	○ VR301, 401, contact faulty ○ Head lead open ○ IC (IC301, 401) faulty	Replace " "
Volume is low	○ VR301, 401 contact faulty ○ IC (IC301, 401) faulty ○ C301, 401, 305, 405 faulty	Replace " "
Oscillates	○ Head lead shield covering came off ○ C302, 402 capacity down	Replace "

⊙Common Section

Symptom	Defective point and cause	Corrective action
No sound	○ Blown Fase ○ Variable resistor-Switch section faulty ○ Coil L601 faulty ○ Choke coil T601 faulty ○ Zener diode D601 short ○ R602 short ○ C602, 603 short	Replace " " " " " "
One channel does not work	○ Power IC (IC302, 402) faulty ○ C316, 416 faulty ○ C318, 418 faulty ○ Speaker open	Replace " " "
Volume is low or distortion	○ Power IC302, 402 faulty ○ C316, 416 faulty ○ C318, 418 faulty ○ Speaker faulty	" " "
Abnormal Sound is produced	○ C602, 603 capacity down ○ Power IC (IC302, 402) faulty ○ C311, 411, 314, 414, 315, 415, 317, 417 faulty	Replace " "

⊙Mechanism Section

Symptom	Place and cause of fault	Corrective action
High tones absent	1) Head azimuth adjustment faulty 2) Scratches on head 3) Head dirty	1) Adjust (see 1) 2) Replace the head (see section 6,7) 3) Clean, (See section 11)
No sound	1) Power switch faulty 2) Motor faulty 3) Drive belt came off	1) Replace the power switch (013-3266-00) 2) Replace the motor (020-0320-01) 3) Replace the belt (602-0034-00)
Tape is not being wound (auto reverse due to tape bulging out)	1) Reel base faulty 2) Idler pressure (contact) faulty 3) Cassette tape faulty (cassette curved, tape hard wound → hub does not move)	1) Measure the take-up torque of the reel base. If less than 55g-cm, replace the real base (960-2926-00). 2) Check idler switching mechanism (check by moving the change plate in PLAY state without pack). a. Repair if the idler is stuck up. b. Clean off any oil or grease c. If the spring (750-1683-00) came off, stretch it properly. 3) If the tape is hard wound, move with a pencil, etc. so that it moves smoothly.
Speed increases during operation (more frequent in the beginning of tape take-up)	1) Pinch roller dirty 2) Pinch roller pressure (contact) faulty 3) Reel base faulty	1) Clean 2) Adjust (measure the pressure, adjust to specified pressure 220g ~ 280g) (See 2). 3) Measure the take-up torque. If the torque is larger than 75g-cm or if there is unevenness, replace the reel (960-2926-00).
Speed is abnormally slow	1) Belt displaced 2) Tension roller faulty	1) Install at correct position 2) Replace (at this time, clean the shaft)
Speed faulty	1) Motor and motor pulley combination faulty	1) Replace the motor pulley a. When speed is fast: D rank → to B rank, replace in steps of 1 rank b. When speed is slow: D rank → E rank, replace in steps of 1 rank

Symptom	Place and cause of faulty	Corrective action
Wow, flutter faulty	1) Capstan dirty (in the case of approx. 8Hz flutter) 2) Adjustment screw at the bottom of flywheel too tight (in the case of approx. 8Hz flutter) 3) Pinch roller faulty (when flutter is of the same frequency as the pinch roller) 4) Detector leaf stuck up, contact (pressure) faulty (in the case of flutter matching with the rotation of the supply reel base) 5) Reel base faulty (in the case of flutter matching with the rotation of the supply reel base) 6) Motor faulty (governor faulty) (When wow and flutter decreases when the set is tilted) 7) Belt faulty (twisted, dirty)	1) Clean 2) Adjust flywheel play to 0.2 ~ 0.3 (0.4 variation for 1 rotation) 3) Clean or replace (960-2921-00, 960-2922-00) (See 4-1). 4) Replace the detector or correct the bend of leaf. (631-0180-00) 5) Replace (960-2921-00, 960-2922-00) 6) Replace the motor (020-0320-01) 7) Replace the belt, repair the twist, clean (602-0034-00)
Abnormal reversion during PLAY	1) Detector faulty 2) Reel base faulty 3) Detector contact faulty	1) Replace (631-0180-00) 2) Replace (960-2921-00, 960-2922-00) 3) Repair the bend of leaf (so that wow and flutter does not worsen)
FF, REW not possible	1) U spring fatigued 2) Spring (750-1689-00) fatigued (slip between flywheel and FF idler) 3) Spring bonding faulty (slip at reel base)	1) Replace (750-1688-00) 2) Replace 3) Take off bond sticking to FF idler shaft side
Program selection not possible	1) Plunger faulty (open) (when NG when the operation is checked with manual switch) 2) Switching mechanism faulty (when only the plunger moves when checked with manual switch) (check the voltage (10V)) 3) Plunger position adjustment faulty (when operates at more than 11V)	1) Replace the plunger 2) Check related parts (spring 750-1681-00, cam plate Ass'y 960-2928-00, cam Ass'y 960-2929-00, change plate 630-0865-00, plate spring 630-0931-00) 3) Adjust (See 4)
Auto eject operation erroneous	1) Select lever stuck up (auto eject performed at the end of tape PLAY after FF, REW) 2) Spring (750-1682-00) displaced (when auto eject performed at tape end at PLAY on forward side) 3) FF, REW mechanism adjustment faulty (auto eject not performed at tape end on FF or REW)	1) Repair select lever (sticking, bending, burr, etc.) (See 6,7) 2) Install at correct position 3) Adjust (See 9)
Pack does not come out	1) Pack insertion mechanism operation faulty a). No grease at the roller shaft of guide arm b). No oil at head plate roller shaft c). No oil at slide plate's shaft roller d). No oil at the rolling contact (corss section of plate) of the rollers 2) Spring (750-1677-00) faulty (loading faulty) (1.1 Kg ± 10% at 102 mm)	1) a), b), c), d): Fill grease containing molybdenum (Nichimori LP-50C) (See section 6,7) 2) Replace with a correct-loading spring
Pack does not drop completely	1) Side panel's mounting position adjustment faulty 2) Pack guide's guide plate adjustment faulty 3) No oil at the sliding part of side panel, guide plate 4) Plate (630-0863-00) position adjustment faulty	1) Adjust (See 7-3) 2) Adjust (See 8) 3) Apply LP-50C 4) Adjust (See 10)
Indicator lamps (tape-running) light at the same time. Crosstalk produced.	1) Switch position adjustment faulty 2) Switch faulty 3) Change plate faulty (only when pack inserted again when ejected on reverse)	1) Adjust (See 3) 2) Replace (013-3066-00) 3) Replace (630-0865-00)
Pack can not be inserted (comes out when inserted)	1) Change plate faulty 2) Lock plate operation faulty 3) Rubber part (345-2651-00) detached	1) Replace (630-0865-00) 2) Replace or apply grease (LP-50C) to pin after cleaning. 3) Insert in correct position

Mechanism Section

Symptom	Place and cause of fault	Corrective action
Program automatic switching time abnormal (normal: 2 ~ 4 sec)	1) Too long (more than 4 sec) a). 33μF capacitor's capacity increased b). 27KΩ resistor's resistance increase c). 2.2μF capacitor's leakage current increased d). 2SH21, 2SC373 deteriorated 2) Too short (less than 2 sec) a. 2.2μF, 33μF capacitor's capacity down b. 27KΩ, 22KΩ resistors deteriorated c. 39KΩ, 18KΩ resistor's resistance increased d. 2SC373, 2SH21 deteriorated	1), 2) replace
Program automatic switching is erroneous (automatic reversion during tape PLAY)	1) Detector (inside reel base) faulty 2) 39K, 22K, 18K, 0.01μF, 2.2μF, D1 faulty 3) 2SC373 faulty 4) Switch (013-3066-00) contact faulty, lead soldering faulty	1) Replace 2) Replace 3) Replace 4) Position adjustment, or replace (See 3-3)
Plunger does not operate	Normal values Manual switch operation check — NG → 1) a. Plunger faulty b. 10D4 short OK ↓ When tape is running: 0.4V At tape end: 0.4 ~ 11V 16-33μ + voltage check — NG → 2) a. 2SC373 faulty b. 2SH21 faulty c. 1S1555 open d. 12K, 27K, 330Ω open e. 16 - 33μF short OK ↓ When tape is running: 13.2V At tape end, reversion: 1.2V 2SC735 collector voltage check — NG → 3) a. 33Ω open b. 2SC735 faulty OK ↓ When tape is running: 13.2V At tape end: 0.2V 2SC235 collector voltage check — NG → 4) a. 1S1588 short b. 12K deteriorated	1) - 4) replace
	NOTE: This mechanism has 2 reel base rotation detecting terminals because of tape coiling prevention. Switching is performed so that detection is made by the take-up reel according to the channel direction. Therefore, when set in PLAY state without inserting cassette pack, automatic reversion is not performed.	
Plunger pull-in time is abnormal (Normal: 0.2 ±0.05 sec)	1) Too long a. 12K resistor's resistance increased b. 33μF capacitor's capacity increased 2) Too short a. 1S1588 short b. 12K resistor deteriorated	

* EXPLODED VIEW:

⊙Main Section

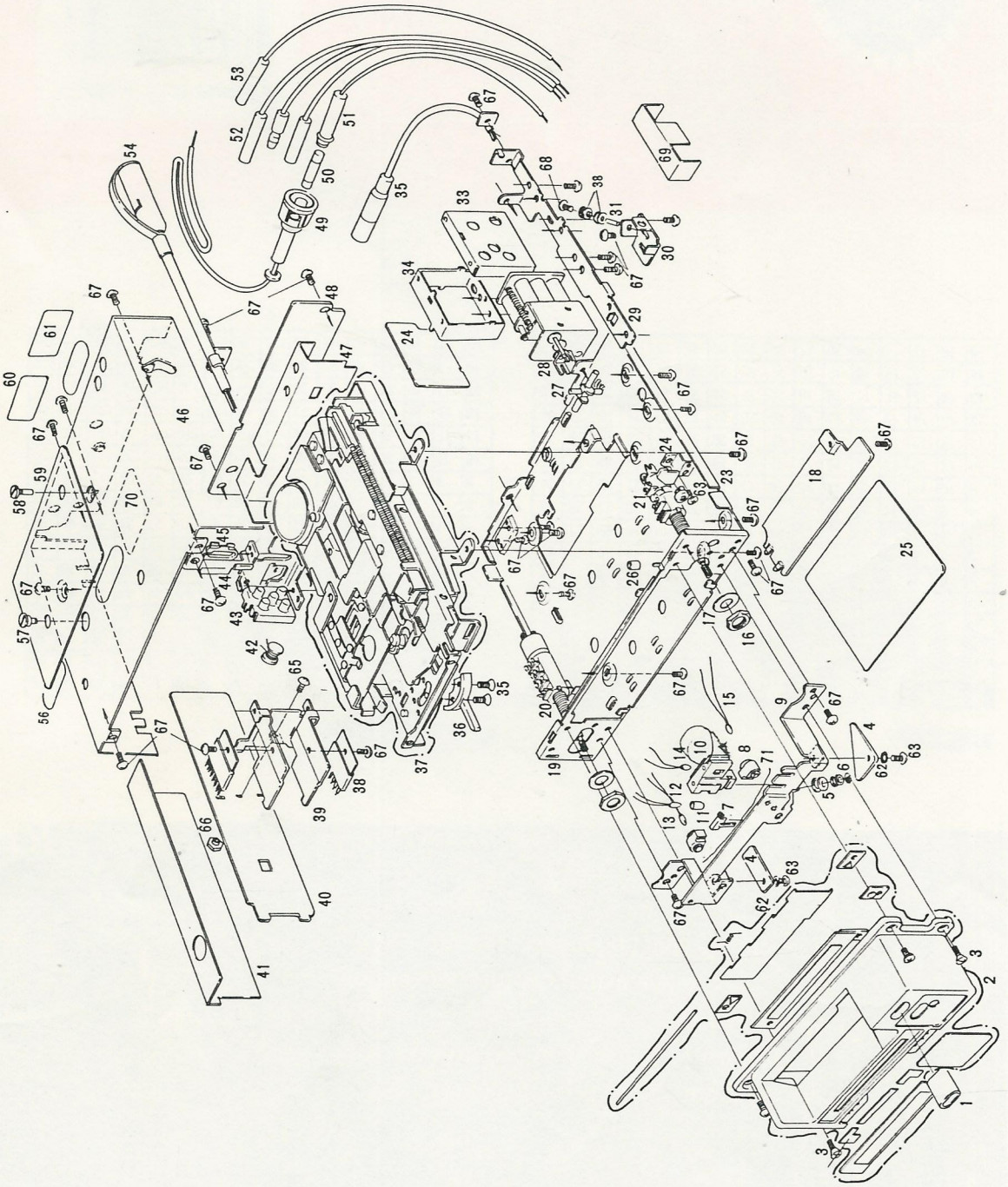

* PARTS LIST:

⊙Main Section

REF. NO.	PART NO.	DESCRIPTION	P.C.S.
1	380-3566-00	Knob	1
2	940-0025A	Escutcheon assembly	1
3	714-3006-41	Machine screw (M3x6)	2
4	099-4542-01	PWB	1
5	335-0530-00	Molded part	1
6	743-2000-00	E-ring	1
7	376-0794-00	Dial pointer	1
8	345-2669-00	Rubber part	2
9	309-0276-00	Front cover	1
10	345-2670-00	Rubber part	1
11	345-2671-00	Rubber part	1
12	017-0314-24	Pilotlamp	1
13	017-0314-23	Pilotlamp	1
14	017-0324-03	Pilotlamp	1
15	017-0314-25	Pilotlamp	1
16	722-0231-00	Special nut	2
17	745-0400-00	Special washer	2
18	304-0281-00	Lower cover	1
19	311-0892-01	Lower case	1
20	012-3479-00 TONE	Variable resistor VOLUME Vc.	1
21	012-3480-00 BAL.	Variable resistor	1
22	004-1494-00	Trimmer	1
23	330-5828-00	Pressed part	1
24	099-4541-01	PWB	1
25	285-0616-01	Guide label	1
26	820-4004-02	Vinyl tube	1
27	335-0310-01	Molded part	1
28	933-0106-00	6 coil manual tuner	1
29	330-5825-00	Pressed part	1
30	330-5829-00	Pressed part	1
31	340-0388-00	Spacer	1
32	335-0460-00	Molded part	2
33	330-5831-00	Pressed part	1
34	330-5830-00	Pressed part	1
35	714-2604-41	Machine screw (M2.6x4)	2
36	~~380-3570-00~~ N/A USE 960-3003-00	Knob F/F	1

REF. NO.	PART NO.	DESCRIPTION	P.C.S.
37	930-0432-01	Tape mechanism	1
38	051-0055-02~03	IC	2
39	313-0934-00	Heat sink	1
40	099-4539-01	PWB	1
41	347-0570-00	Paper part	1
42	010-0820-03	Coil	1
43	944-0457-00	Filter assembly	1
44	330-5826-00	Pressed part	1
45	335-0580-00	Molded part	1
46	310-0859-00	Upper case	1
47	347-0569-00	Paper part	1
48	099-4540-01	PWB	1
49	850-1844-01	A-lead	1
50	120-0050-00	Fuse (5A)	1
51	850-1822-00	A-lead	1
52	851-2057-01	Speaker lead	1
53	852-4637-00	Extension lead	1
54	852-4972-01	Extension lead	1
55	092-0507-00	Antenna recept	1
56	290-2567-01	Label	3
57	716-0288-00	Special screw	1
58	716-0295-00	Special screw	1
59	285-0653-01	Guide label	1
60	285-0620-00	Guide label	1
61	286-3678-00	Set plate	1
62	742-2600-20	Toothed washer	2
63	714-2604-10	Machine screw (M2.6x4)	3
64	714-2604-81	Machine screw (M2.6x4)	2
65	714-3005-81	Machine screw	1
66	725-0182-00	Plate nut	1
67	714-3004-81	Machine screw (M3x4)	31
68	714-3008-81	Machine screw	1
69	347-0582-00	Paper part	1
70	347-0316-00	Paper part	1
71	830-0560-60	Dial cord	1

* ELECTLIC PARTS:

⊙RF Conver Section

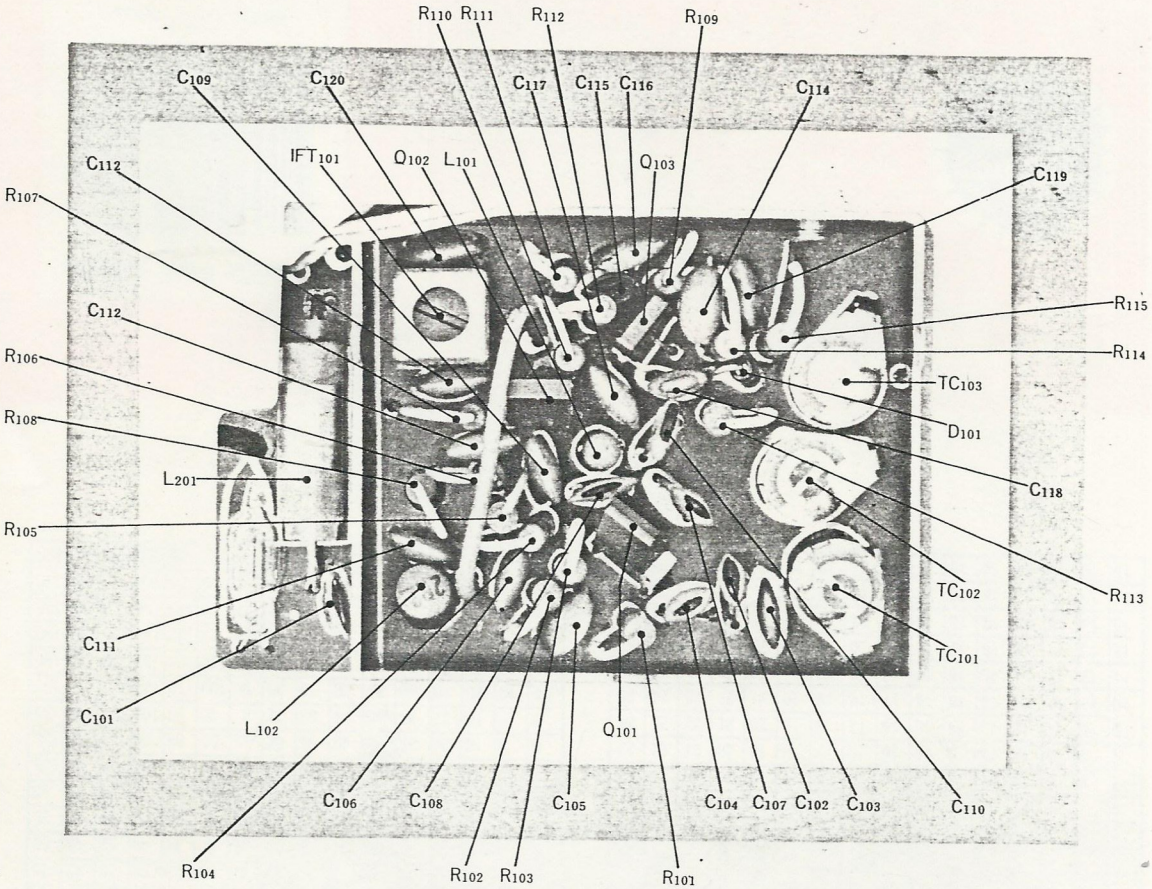

* PART LISTS:

⊙RF Conver Section

REF. NO.	PART NO.	DESCRIPTION	P.C.S.
Q_{101}	102-1342-02	Transistor (2SC1342)	1
$Q_{102,103}$	102-0461-02	Transistor (2SC461)	2
D_{101}	001 0130-00	Diode (IS2790WT)	1
$TC_{101,102}$	004-1496-00	Trimmer	2
TC_{103}	004-1502-00	Trimmer	1
IFT_1	005-0698-00	IF trans	1
L_{101}	010-1570-01	Coil	1
L_{102}	010-1180-00	Coil	1
L_{261}	010-0490-01	Coil	1
$C_{101,108}$	152-2202-13	Ceramic capacitor (22PFCH)	2
$C_{102,115}$	151-1002-13	Ceramic capacitor (10PFCH)	2
C_{103}	152-2702-13	Ceramic capacitor (27PFCH)	1
$C_{104,107}$	151-3096-13	Ceramic capacitor (3PFCH)	2

REF. NO.	PART NO.	DESCRIPTION	P.C.S.
$C_{105,106,111,113,116,117,119}$	160-1022-05	Ceramic capacitor (50V0.001μFB)	8
C_{109}	160-3312-05	Ceramic capacitor (50V330PFB)	1
C_{110}	151-1096-13	Ceramic capacitor (1PFCH)	1
C_{114}	151-5097-70	Ceramic capacitor (5PFWK)	1
C_{118}	151-4097-50	Ceramic capacitor (4PFTH)	1
$R_{102,103,106,112}$	111-8221-22	Film resistor (1/8W 8.2KΩ±5%)	4
R_{101}	111-3321-22	Film resistor (1/8W 3.3KΩ±5%)	1
$R_{104,108,110}$	111-2211-22	Film resistor (1/8W 220Ω±5%)	3
$R_{105,109,111}$	111-2221-22	Film resistor (1/8W 2.2KΩ±5%)	3
R_{107}	111-1021-22	Film resistor (1/8W 1KΩ±5%)	1
R_{113}	111-5641-22	Film resistor (1/8W560KΩ±5%)	1
R_{114}	111-1041-22	Film resistor (1/8W100KΩ±5%)	1
R_{115}	111-2241-22	Film resistor (1/4W220KΩ±5%)	1

* ELECTRIC PARTS:

⊙Tuner Section

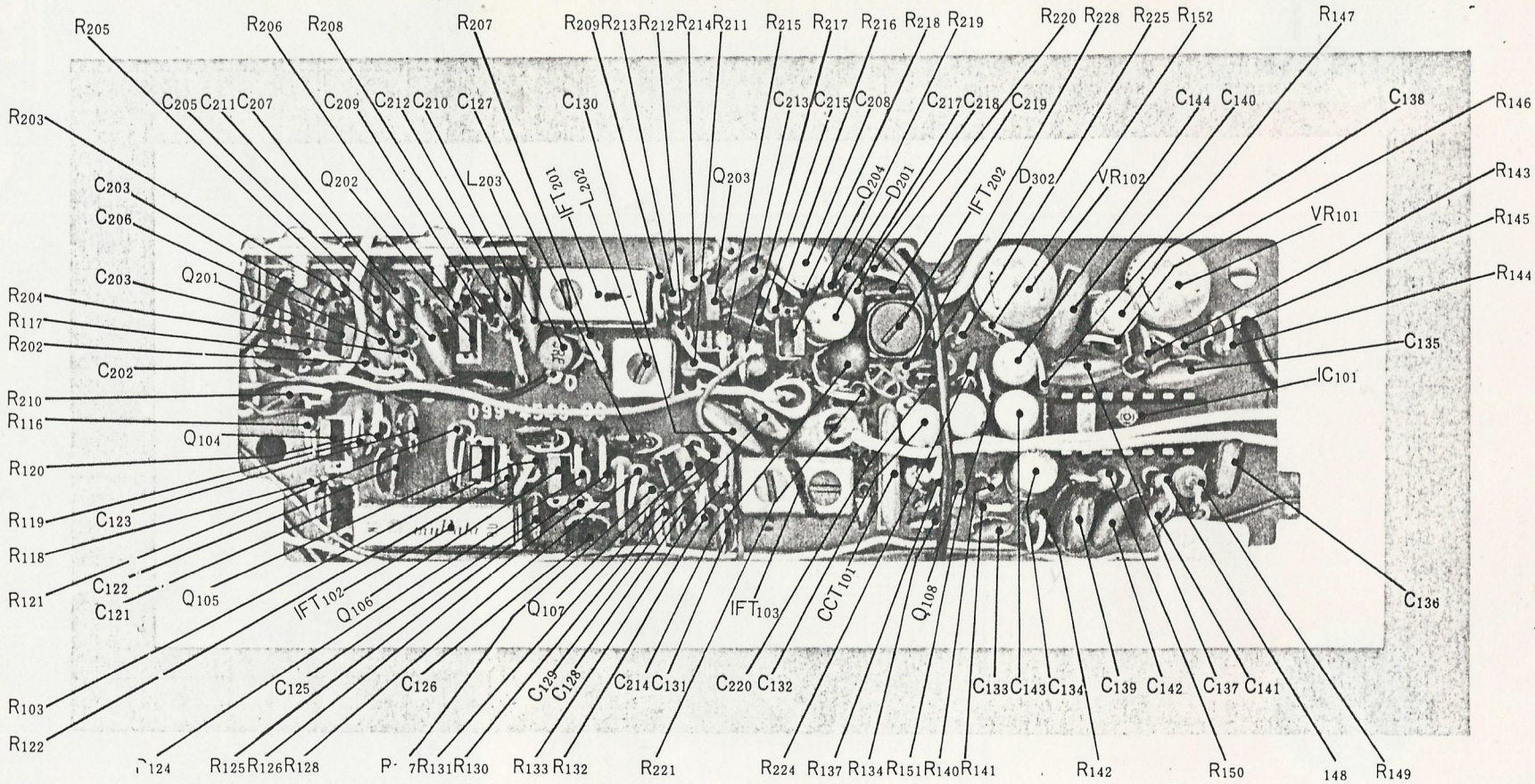

* PARTS LIST:

⊙Tuner Section

REF. NO.	PART NO.	DESCRIPTION	P.C.S.
$Q_{104,105,106,107,108,201,203,204}$	102-0460-02	Transistor (2SC460B)	8
Q_{202}	102-0454-02	Transistor(2SC454B)	1
IC_{101}	051-0050-00～01	IC	1
$D_{102,103}$	001-0020-00	Diode (1N60)	2
$D_{201,202}$	001-0095-00	Diode (1S2076)	2
IC_{201}	004-1494-00	Trimmer	1
T_{202}	004-1503-00	Trimmer	1
IFT_{102}	005-0706-00	IF trans	1
IFT_{103}	005-0684-02	IF trans	1
IFT_{201}	005-0709-00	IF trans	1
IFT_{202}	005-0707-00	IF trans	1
L_{202}	010-1699-00	Coil	1
L_{203}	010-1704-00	Coil	2
$VR_{101,102}$	012-3394-00	Variable resistor	1
CCT_{101}	050-0010-00	Component CCT	1
C_{120}	160-1022-05	Ceramic capacitor (50V 0.001μFB)	1
$C_{121,122,123,125,126,128,131,202,205,212,219,220}$	141-1033-12	Polyester capacitor (50V 0.01μF)	13
$C_{124,127}$	141-1023-11	Polyester capacitor (50V 0.001μF)	2
$C_{129,135,137,211}$	043-0020-00	Special capacitor (12V 0.2μF)	4
$C_{130,136,139,213}$	141-3333-14	Polyester capacitor (50V 0.033μF)	4
$C_{132,138}$	180-1054-62	Electrolytic capacitor (50V 1μF)	2
C_{133}	160-5612-05	Ceramic capacitor (50V 560PFB)	1
$C_{134,221}$	180-2254-62	Electrolytic capacitor (50V 2.2μF)	2
C_{140}	144-3312-17	Mica capacitor (50V 330PF)	1
$C_{141,142}$	141-2233-13	Polyester capacitor (50V 0.022μF)	2
$C_{143,144}$	180-4744-62	Electrolytic capacitor (50V 0.47μF)	2
C_{201}	154-8202-13	Ceramic capacitor (82PFCH)	1
C_{203}	141-3323-12	Polyester capacitor (50V 0.0033μF)	1
$C_{204,209}$	141-1523-11	Polyester capacitor (50V 0.0015μF)	2
C_{210}	156-1512-50	Ceramic capacitor (150PFTH)	1
C_{207}	141-4723-12	Polyester capacitor (50V 0.0047μF)	1
C_{208}	042-0199-00	Special capacitor (10V 22μF)	
$C_{206,218}$	160-1512-05	Ceramic capacitor (50V 150PFB)	2
C_{214}	180-2264-22	Electrolytic capacitor (10V 22μF)	1

REF. NO.	PART NO.	DESCRIPTION	P.C.S.
C_{216}	160-4712-05	Ceramic capacitor (50V 470 PFB)	1
C_{217}	042-0176-00	Special capacitor (16V 10μF)	1
$R_{116,214}$	111-1821-22	Film resistor (1/8W 1.8KΩ±5%)	2
$R_{117,129,136,142}$	110-1032-31	Solid resistor (1/4W 10KΩ±10%)	4
$R_{118,123,126,130,146,203,218}$	111-1021-22	Film resistor (1/8W 1KΩ±5%)	7
$R_{119,125,132,211}$	111-2211-22	Film resistor (1/8W 220Ω±5%)	4
R_{120}	111-3911-22	Film resistor (1/8W 390Ω±5%)	1
$R_{121,131}$	111-1811-22	Film resistor (1/8W 180Ω±5%)	2
$R_{122,124}$	111-5631-22	Film resistor (1/8W 56KΩ±5%)	2
$R_{127,140,201,205}$	111-4721-22	Film resistor (1/8W 4.7KΩ±5%)	4
$R_{217,128}$	111-5621-22	Film resistor (1/8W 5.6KΩ±5%)	2
$R_{133,220}$	111-1011-22	Film resistor (1/8W 100Ω±5%)	2
R_{134}	111-2231-32	Film resistor (1/4W 22KΩ±5%)	1
R_{135}	111-2241-31	Film resistor (1/4W 220KΩ±5%)	1
$R_{137,141,210}$	111-1531-22	Film resistor (1/8W 15KΩ±5%)	3
$R_{138,143}$	111-1041-22	Film resistor (1/8W 100KΩ±5%)	2
R_{139}	111-6811-22	Film resistor (1/8W 680Ω±5%)	1
$R_{144,145}$	111-8231-22	Film resistor (1/8W 82KΩ±5%)	4
R_{147}	111-2231-22	Film resistor (1/8W 22KΩ±5%)	1
$R_{148,151,152}$	111-3921-22	Film resistor (1/8W 3.9KΩ±5%)	3
R_{149}	110-3312-41	Solid resistor (1/2W 330Ω±5%)	1
$R_{150,216}$	111-3921-31	Film resistor (1/4W 3.9KΩ±5%)	2
$R_{202,208}$	111-6821-22	Film resistor (1/8W 6.8KΩ±5%)	2
R_{204}	111-2431-22	Film resistor (1/8W 24KΩ±5%)	1
R_{206}	110-2222-31	Solid resistor (1/4W 2.2KΩ±5%)	1
R_{207}	111-4791-22	Film resistor (1/8W 4.7Ω±5%)	1
R_{209}	111-3311-22	Film resistor (1/8W 330Ω±5%)	1
R_{212}	110-1042-31	Solid resistor (1/4W 100KΩ±10%)	1
R_{215}	111-3321-22	Film resistor (1/8W 3.3KΩ±5%)	1
R_{219}	111-8221-22	Film resistor (1/8W 8.2KΩ±5%)	1
R_{221}	111-1541-22	Film resistor (1/8W 150KΩ±5%)	1
R_{223}	111-3301-31	Film resistor (1/4W 33Ω±5%)	1
$R_{224,225}$	111-1831-22	Film resistor (1/4W 18KΩ±5%)	2

* ELECTRIC PARTS:

⊙Pre main amp section

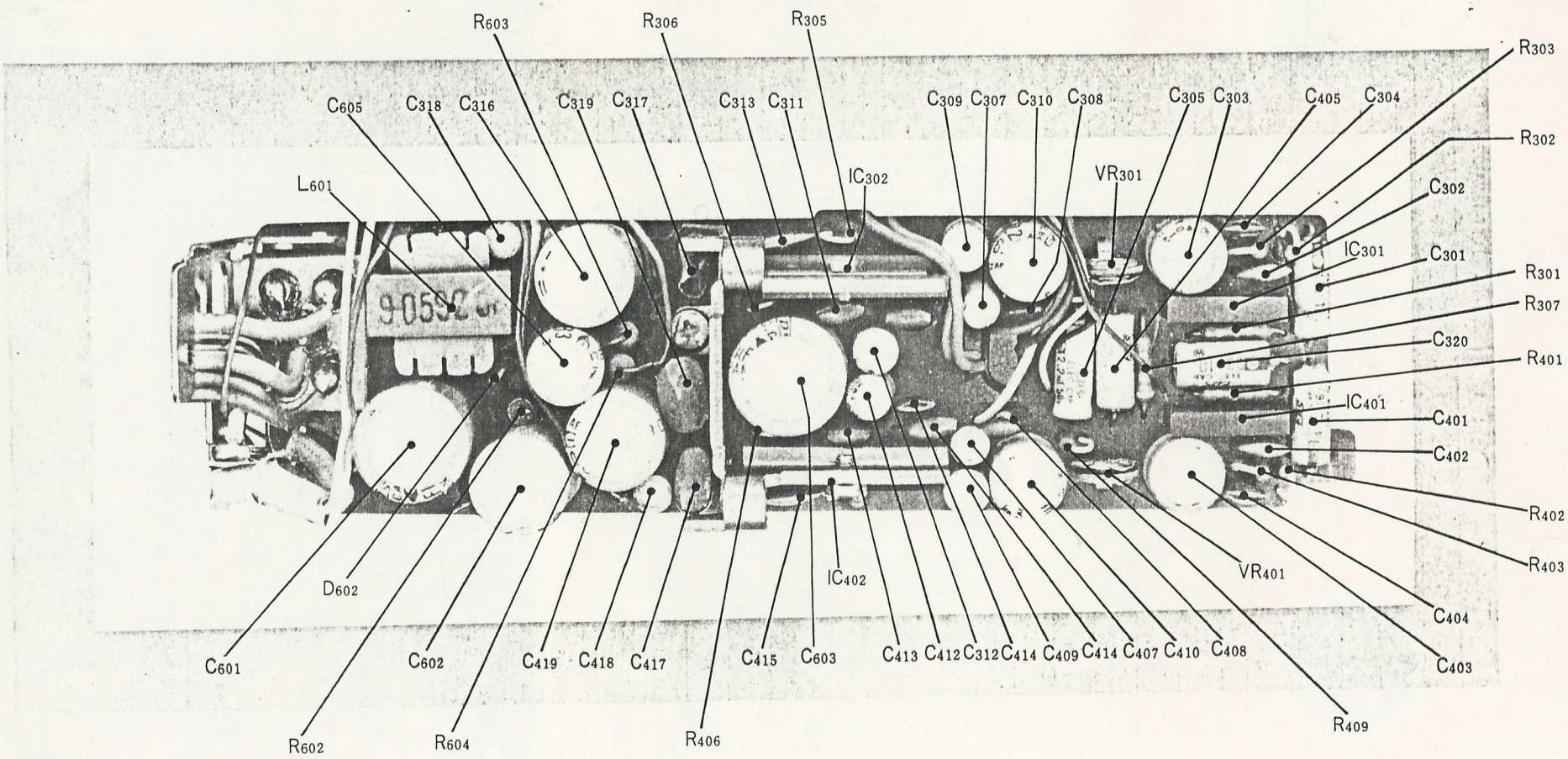

*PARTS LIST:

⊙Pre main amp Section

REF. NO.	PART NO.	DESCRIPTION	P.C.S
$IC_{301,401}$	051-0020-02 ~ 03	IC	2
$IC_{302,402}$	051-0055-02 ~ 03	IC	2
D_{601}	001-0099-01	Diode (HZ7B)	1
$D_{602,603}$	001-0077-00	Diode (10D4)	2
L_{601}	010-0820-03	Coil	1
$VR_{301,401}$	012-3170-04	Variable resistor	2
$C_{301,401}$	180-4754-31	Electrolytic capacitor (16V 4.7μF)	2
$C_{302,402}$	152-3302-13	Ceramic capacitor (33PFCH)	2
$C_{303,304,602}$	042-0158-00	Special capacitor (10V 100μF)	3
$C_{304,313,404,413}$	141-1033-12	Polyester capacitor (50V 0.01μF)	4
$C_{305,405}$	180-2254-61	Electrolytic capacitor (50-2.2μF)	2
$C_{306,406}$	141-4733-14	Polyester capacitor (50V 0.047μF)	2
$C_{307,318,407,418}$	180-1054-62	Electrolytic capacitor (50V 1μF)	4
$C_{308,408}$	141-1523-11	Polyester capacitor (50V 0.0015μF)	2
$C_{309,409,312,412}$	180-4764-22	Electrolytic capacitor (10V 47μF)	4
$C_{310,410}$	180-2274-12	Electrolytic capacitor (6.3V 220μF)	2
$C_{311,411}$	141-2233-13	Polyester capacitor (50V 0.022μF)	2
$C_{314,414}$	152-2202-13	Ceramic capacitor (22PFCH)	2
$C_{315,415}$	154-1012-13	Ceramic capacitor (100PFCH)	2
$C_{316,416}$	180-1084-22	Electrolytic capacitor (10V 1000μF)	2
$C_{317,417}$	141-6833-14	Polyester capacitor (50V 0.068μF)	2
C_{319}	141-1043-15	Polyester capacitor (50V 0.1μF)	1
$C_{601,603}$	042-0178-00	Special capacitor (16V 1000μF)	2
$R_{301,401}$	111-6831-31	Film resistor (1/4W 68KΩ ± 5%)	2
$R_{302,402}$	111-1831-22	Film resistor (1/8W 18KΩ ± 5%)	2
$R_{303,403}$	111-3941-22	Film resistor (1/8W 390KΩ ± 5%)	2
$R_{304,404}$	111-5621-22	Film resistor (1/8W 5.6KΩ ± 5%)	2
$R_{305,405}$	111-6801-22	Film resistor (1/8W 68KΩ ± 5%)	2
$R_{306,407}$	111-4731-22	Film resistor (1/8W 47KΩ ± 5%)	2
R_{601}	110-8202-41	Solid resistor (1/2W 82Ω ± 10%)	1
R_{602}	110-2212-41	Solid resistor (1/2W 220Ω ± 10%)	1
R_{603}	114-1212-51	Film resistor (1W 120Ω ± 10%)	1
R_{604}	114-1512-51	Film resistor (1W 150Ω ± 10%)	1
R_{605}	114-2292-52	Film resistor (1W 22Ω ± 10%)	1

⊙Auto reverse Section

REF. NO.	PART NO.	DESCRIPTION	P.C.S.
Q_{501}	102-0373-00	Transistor(2SC373)	1
Q_{502}	107-0021-00	Transistor(2SH21)	1
Q_{503}	102-0735-25	Transistor (2SC735(Y))	1
Q_{504}	103-0235-85	Transistor (2SD235LBY)	1
$D_{501,502}$	001-0112-00	Diode	2
C_{501}	141-1033-12	Polyester capacitor (50V 0.01μF)	1
C_{502}	180-2253-62	Electrolytic capacitor (50V 2.2μF)	1
C_{503}	180-1064-32	Electrolytic capacitor (16V 10μF)	1
C_{504}	181-3363-32	Electrolytic capacitor (16V 33μF)	1
R_{501}	111-2232-32	Film resistor (1/4W 22KΩ ± 10%)	1
R_{502}	111-1832-32	Film resistor (1/4W 18KΩ ± 10%)	1
R_{503}	111-6832-32	Film resistor (1/4W 68KΩ ± 10%)	1
R_{504}	111-2731-32	Film resistor (1/4W 27KΩ ± 5%)	1
R_{505}	111-1232-32	Film resistor (1/4W 12KΩ ± 10%)	1
R_{506}	111-3312-32	Film resistor (1/4W 330Ω ± 10%)	1
R_{507}	111-1022-32	Film resistor (1/4W 1KΩ ± 10 %)	1
R_{508}	114-3302-51	Film resistor (1W 33Ω ± 10%)	1

⊙Auto revers Section

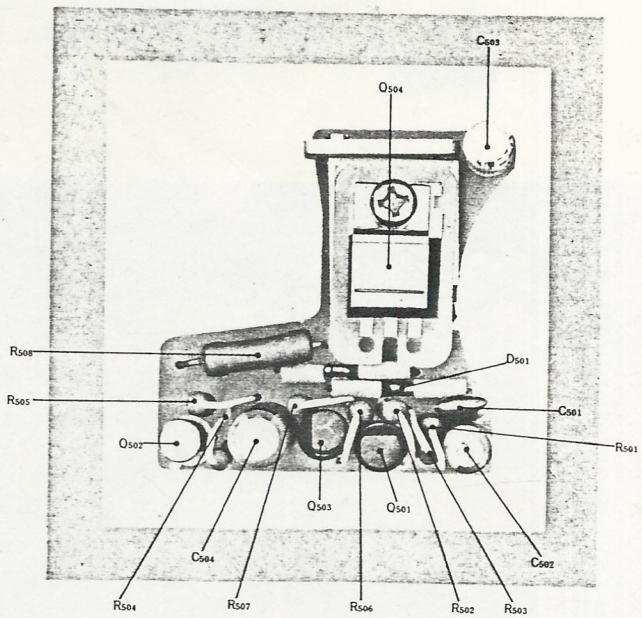

* PARTS LIST:

⊙Mechanism Section

REF. NO.	PART NO.	DESCRIPTION	P.C.S.
1	960-2912-01	Deck plate assembly	1
2	960-2913-00	Stopper assembly	1
3	960-2917-00	Head plate assembly	1
4	960-2921-00 FRONT	Roller A assembly	1
5	960-2922-00	Roller B assembly	1
6	960-2918-00	Pack guide assembly	1
7	960-2933-00	Side panel assembly	1
8	960-2928-00	Cam plate assembly	1
9	960-2929-00	Cam assembly	1
10	960-2914-00	Slide plate A assembly	1
11	960-2915-00	Slide plate B assembly	1
12	960-2916-00	Frame assembly	1
13	960-2931-00	Idler plate A assembly	1
14	960-2932-00	Idler plate B assembly	1
15	960-2927-00	Rink assembly	1
16	960-2925-00	FF arm assembly	1
17	960-2923-00	FF knob assembly	1
18	960-2924-00	FF plate assembly	1
19	960-2930-00	Bottom plate assembly	1
20	960-2926-00	Reel base assembly	1
21	330-4896-00	Pressed part	5
22	820-4020-02	Vinyl tube	5
23	013-0013A	Switch assembly	1
24	631-0180-00	Detector	1
25	742-2600-20	Toothed washer	1
26	631-0173-00	Arm	1
27	345-2647-00	Rubber part	1
28	630-0864-01	Guide plate	1
29	011-0238-00	Head	1
30	610-0067-00	Roller	2
31	610-0065-00	Roller	1
32	020-0320-01	DC motor	1
33	603-0043-00	Motor pulley	1
34	015-0206-00	Plunger	1
35	630-0862-00	Switch plate	1
36	013-3266-00	Switch	1
37	630-0863-00	Pressed part	1
38	630-0861-00	Lock plate	1

REF. NO.	PART NO.	DESCRIPTION	P.C.S.
39	630-0873-00	Plate	1
40	630-0859-00	Select lever	1
41	630-0860-00	Eject lever	1
42	612-0140-00	Shaft	1
43	741-2600-21	Spring washer	5
44	602-0034-00	Belt	1
45	611-0041-00	Flywheel	2
46	630-0866-00	Flywheel plate	1
47	630-0865-00	Change plate	1
48	632-0561-00	Tension roller	1
49	632-0558-00	Idler	2
50	630-0868-00	Brake B	1
51	630-0867-00	Brake A	1
52	630-0879-00	Slide plate	1
53	750-1689-00	Spring	1
54	750-1680-00	Spring	1
55	750-1685-00	Spring	1
56	750-1684-00	Spring	1
57	750-1686-00	Spring	1
58	750-1676-00	Spring	1
59	750-1677-00	Spring	1
60	750-1682-00	Spring	1
61	750-1687-00	Spring	1
62	750-1681-00	Spring	1
63	750-1683-00	Spring	1
64	750-1679-00	Spring	1
65	750-1678-00	Spring	1
66	750-1688-00	Spring	1
67	345-2441-00	Rubber part	2
68	610-0066-00	Roller	3
69	610-0068-00	Roller	1
70	820-3020-05	Vinyl tube	1
71	820-4020-04	Vinyl tube	1
72	345-2651-00	Rubber part	2
73	746-0624-00	Special washer	4
74	630-0931-00	Plate spring	1
75	716-0281-00	Special screw	2
76	347-0437-00	Paper part	

REF. NO.	PART NO.	DESCRIPTION	P.C.S.
77	714-3004-81	Machine screw (M3x4)	2
78	714-2605-81	Machine screw (M2.6×5)	12
79	732-2604-11	Sems screw (M2.6x4)	3
80	714-2603-81	Machine screw (M2.6x3)	6
81	714-2605-41	Machine screw (M2.6x5)	1
82	714-2004-81	Machine screw (M2x4)	8
83	714-2308-81	Machine screw (M2.3x8)	2
84	732-2605-11	Sems screw (M2.6x5)	2
85	743-3000-10	E-ring (M3)	11
86	743-2000-10	E-ring (M2)	6
87	743-1500-10	E-ring (M1.5)	10
88	990-0216-00	PWB assembly	1
89	716-0286-00	Special screw (M2x4)	1
90	630-0930-01	Plate screw	1
91	630-0933-00	Pressed part	1
92	013-3262-00	Switch	1
93	630-0932-01	Switch plate	1
94	099-4543-00	PWB	1

* EXPLODED VIEW:

⊙ Mechanism Section

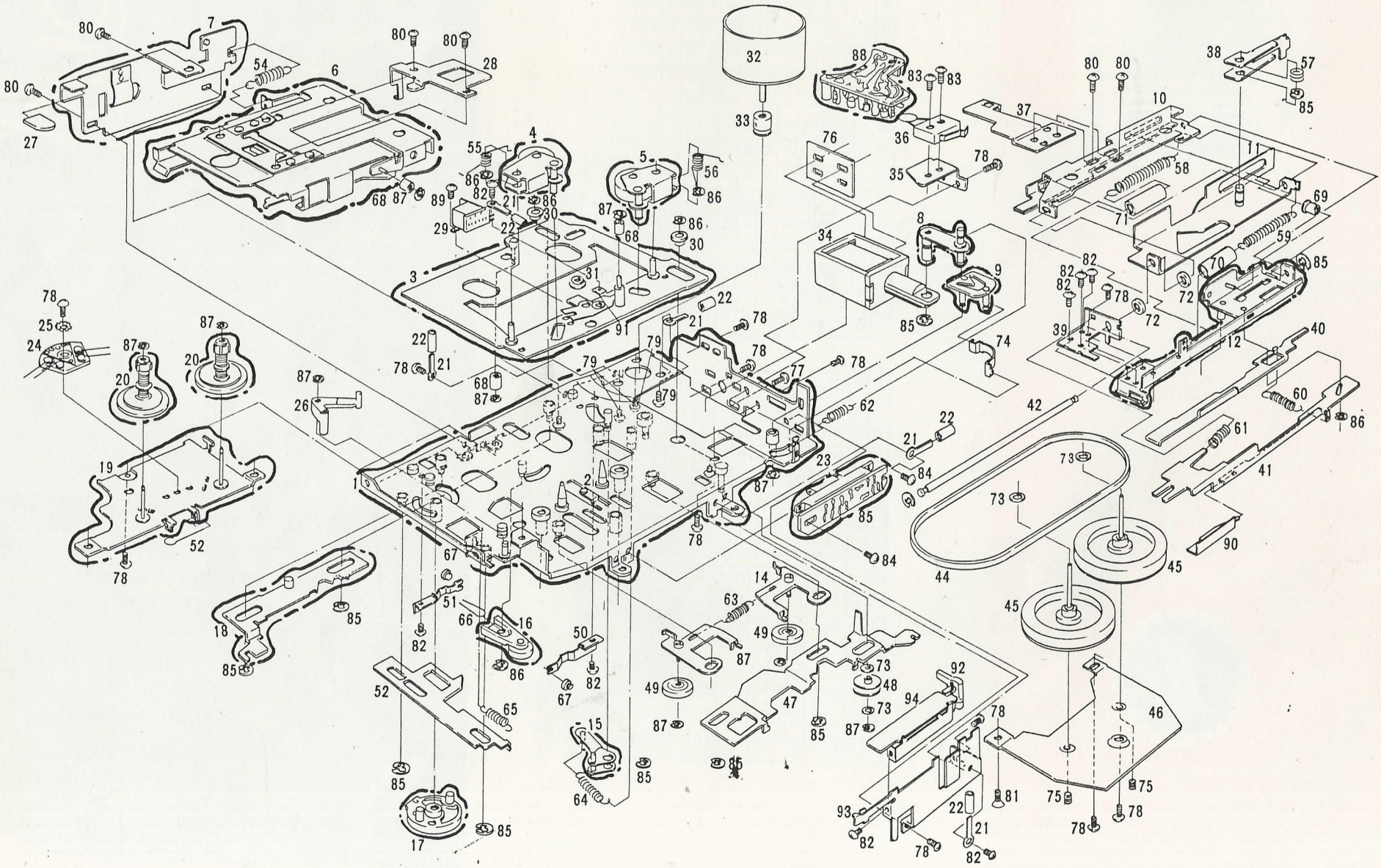

* PRINTED WIRING BOARD:

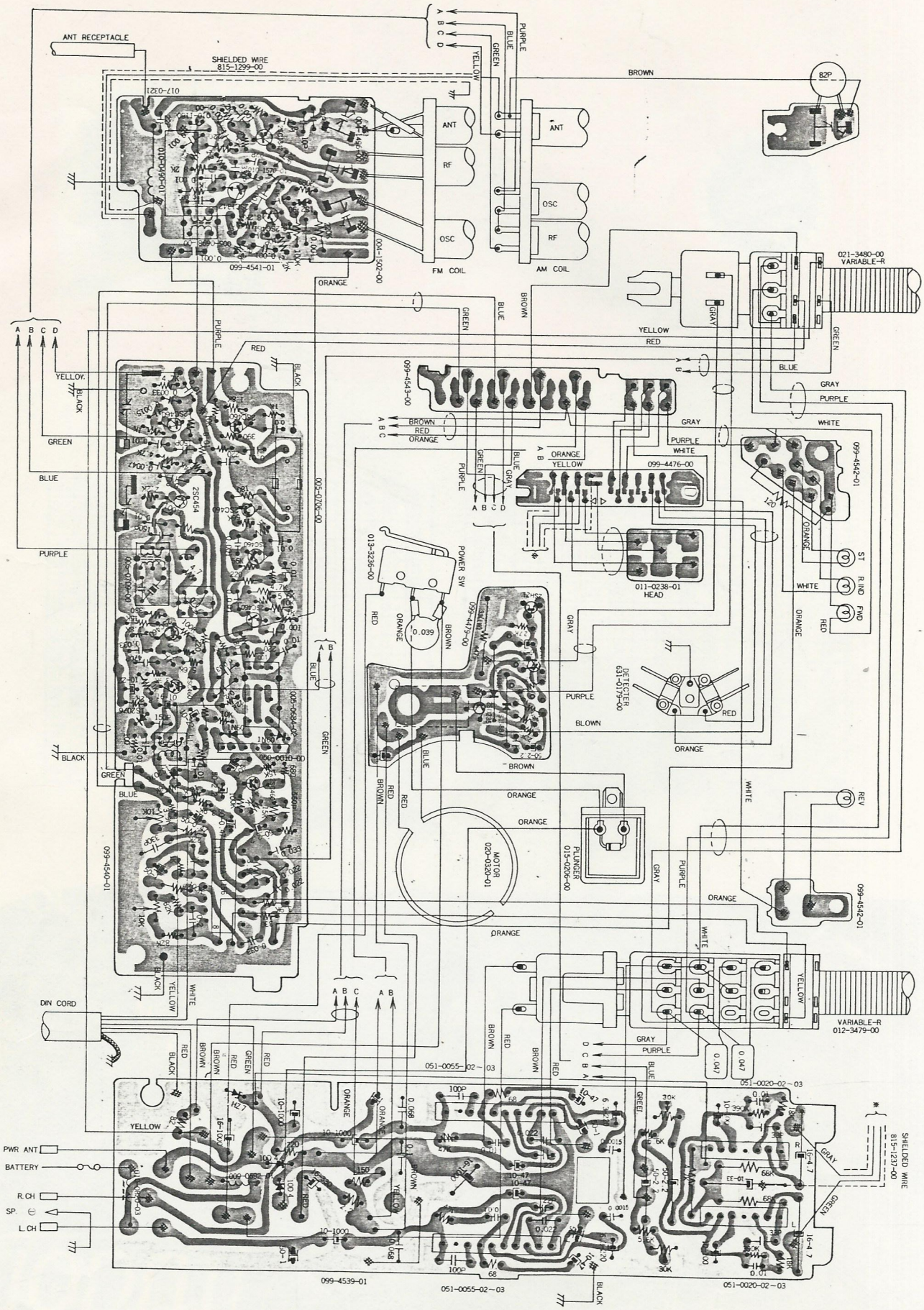

PE-662A

EXPLODED VIEW: Mechanism Section

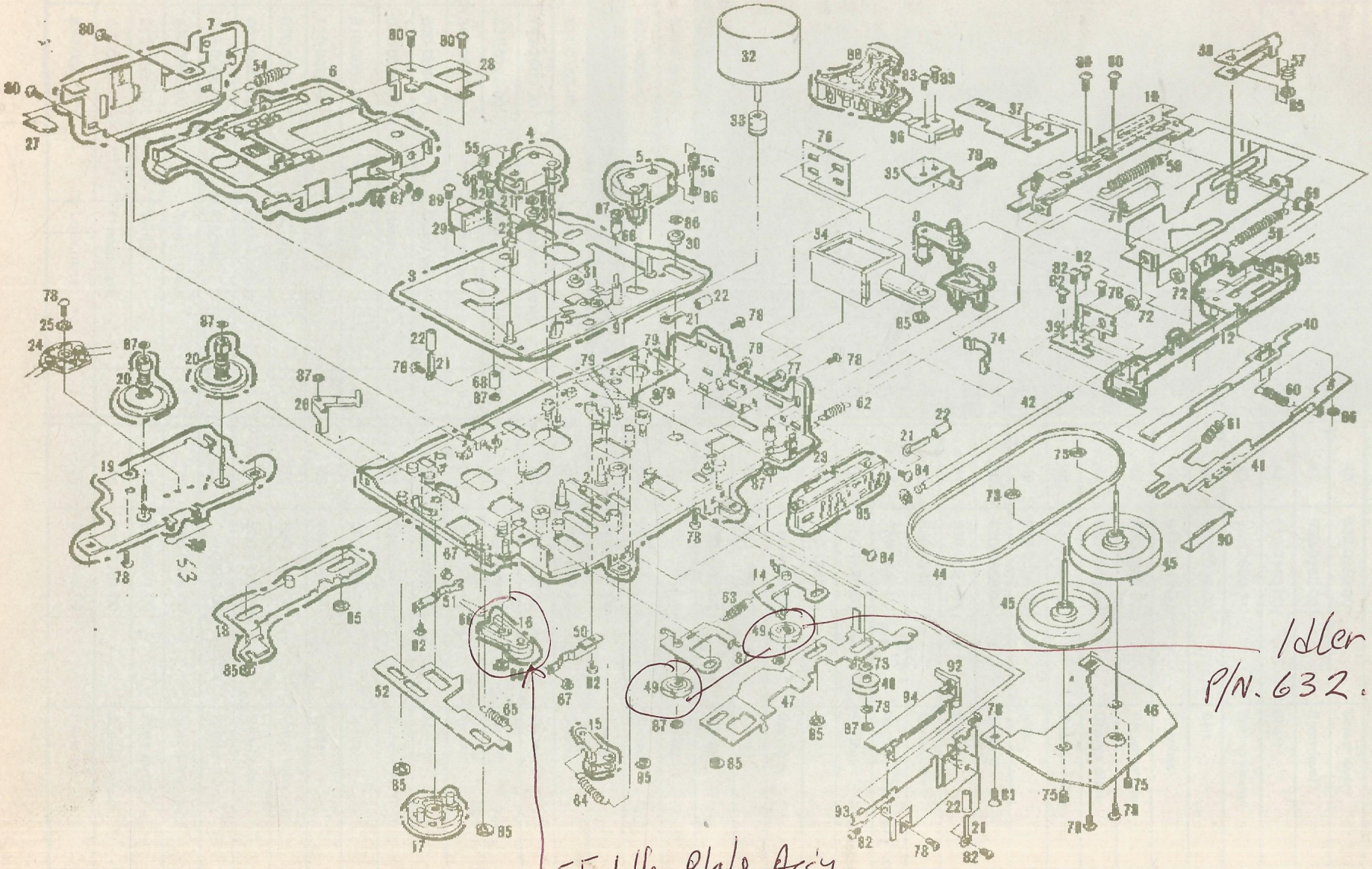

PU-662A