CLARION SERVICE MANUAL

8-TRACK STEREO PLAYER WITH BUILT-IN MW/UKW-MPX RADIO

MODEL PE-613A

CLARION SHOJI. CO., LTD.
NEW KOJIMACHI BLDG., 3, 5-CHOME, KOJIMACHI, CHIYODA-KU, TOKYO, JAPAN. PHONE NO. 265-2031~4
USA BRANCH: CLARION SHOJI. CO., LTD. (U.S.A.)
2306 COTNER AVENUE, LOS ANGELES, CALIF., 90064, U.S.A. PHONE NO. 272-1178, 272-1169, 479-5556.
EUROPE BRANCH: CLARION SHOJI (EUROPA) G.m.b.H.
2000 HAMBURG 76, SCHÖNE AUSSICHT 35, GERMANY. PHONE: 2207667

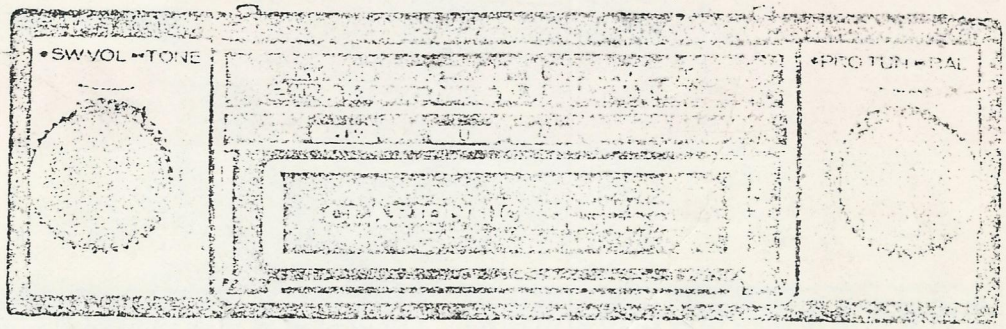

*SPECIFICATIONS:

(RADIO SECTION)

Circuit system:	Superheterodyne	
Receiving frequency:	MW	530KHz~1,605KHz
	UKW	87.5MHz~108MHz
	WITH FM/MPX FCC system stereo	
Tuning system:	MW	Manual μ-tuning
	UKW	Manual c-tuning
Intermediate frequency:	MW	452.5kHz
	UKW	10.7MHz
Maximum sensitivity:	MW	Less than 20dB
	UKW	Less than 8dB
Pratical sensitivity:	MW	Less than 30dB (at 20dB S/N)
	UKW	Less than 18dB (at 30dB S/N)
AGC. FOM:	MW	More than 45dB
Limiting sensitivity:	UKW	Less than 18dB
Fidelity:	MW 100Hz.	H: −2±3dB
		L: +1 ±3dB
	4,000Hz.	H: −22±4dB
		L: −38±4dB
	UKW 100Hz.	H. 0±3dB
		L: +1±3dB
	4,000Hz.	H: −8±4dB
		L: −24±4dB
Image ratio:	MW	More than 50dB
	UKW	More than 40dB
Selectivity:	MW	More than 20dB (when deturned ±10kHz)
Capchar ratio:	UKW	Less than 3dB
Stereo separation:	U/MPX	30dB (at 400Hz)
Intermediate frequency ratio:	MW	More than 40dB
	UKW	More than 70dB
Output:		More than 4Wx x 2 (Maximum outpu
		More than 3W x 2 (Distortion less)

(TAPE SECTION)

Reproduction system:	8 track, 4 program, 2 channel stereo
Tape speed:	3¾ ips (9.5 cm/sec)
Wow and Flutter:	Less than 0.3%
Crosstalk:	More than 30dB (for adjacent chan
	More than 40dB (for adjacent trac
S/N ratio:	More than 45dB
Distortion:	Less than 1% (at 1.0W)
Output:	More than 4W x 2 (Maximum output)
Output impedance:	4Ω x 2
Reproduction frequency range:	50Hz ~10,000Hz

(GENERALIZATION)

Semiconductors: 11 transistors, 5 ICS, 8 Diodes

Radio frequency amplifier (MW)	2SC941 x 1
Frequency converter (MW)	2SC829 x 1
Intermediate frequency amplifier 1st (MW)	2SC829 x 1
Intermediate frequency amplifier 2nd (MW)	2SC829 x 1
Radio detector (MW)	1S1555 x 1
Radio frequency amplifier (UKW)	2SC668 x 1
Frequency converter (UKW)	2SC668 x 1
Oscilator (UKW)	2SC772 x 1
Intermediate frequency amplifier 1st (UKW)	2SC829 x 1
Intermediate frequency amplifier 2nd (UKW)	2SC829 x 1
Intermediate frequency amplifier 3rd (UKW)	2SC829 x 1

Printed in Japan 298-1639-00

Intermediate frequency amplifier and limiter
4th (UKW) ..... 2SC829 x 1
Ratio detector (UKW) ..... 1S1555 x 2
UKW-MPX ..... 051-0012-00 x 1
Audio frequency amplifier
(UKW/MW/TAPE) ..... 051-0011-00 x 2
Power amplifier (UKW/MW/TAPE) ..... 051-0010-00 x 2
Voltage regulator (UKW/MW) ..... 1S1715 x 2
UKW . AFC ..... 1S352 x 1

Power supply change ..... 001-0072-00 x 1
Damper ..... 1S1943 x 1

Power supply voltage:	DC, 14V (10.8V ~ 15.6V) Negative ground
Power consumption:	Less than 2.0A
Weight:	4.8 lbs (2.2 kg)
Dimensions:	Width ..... 7.1" (180 mm)
	Height ..... 2.15" (54 mm)
	Depth ..... 7.1" (180 mm)

*COMPONENTS:

	Car stereo unit	1 Set
280-3060-00	Owner's guide	1 Each
300-0490-00	Rear mounting bracket	1 Each
852-4649-00	Extension lead	1 Each
921-5709-00	Parts bag	1 Set

*FEATURES:

- **Extensive use of ICs**
  An unique car stereo with 2-band MPX radio containing monotheline ICs superior in vibration and weather resistance.
- **Power IC with low distortion factor**
  Since a power IC of low distortion factor is used in the output stage, distortionless circuit tones can be obtained.
- **Direct coupling IF amplifier circuit (UKW) using ceramic filter**
  A ceramic filter with ideal selectivity characteristics and multidirectal coupling amplifier provides unparalleled characteristic, eliminating external noise and near-by radio wave interference, and allowing comfortable, clear reception.
- **Vivid stereo effect due to high performance MPX IC**
  High performance monothelic IC in the MPX circuit provides fresh stereo sound, giving you an on stage feeling. In addition, stereo broadcasting can be switched to mono by means of a MONO/STEREO changeover switch.
  Broadcasting excellence can also be enjoyed even with a weak radio signal.
- **High output tape recorder**
  A specially designed high output tape recorder section permits superior quality in vibration resistance and stability even while driving oven rough terrain.
- **Easy to see digital indicator**
  ON/OFF switching of the power supply is automatically done by inserting or removing the tape cartridge. A digital indicator makes it possible to confirm the playback program position at a glance.

*ADJUSTMENT OF MW/UKW/MPX RADIO SECTION (Refer to Fig. 1):

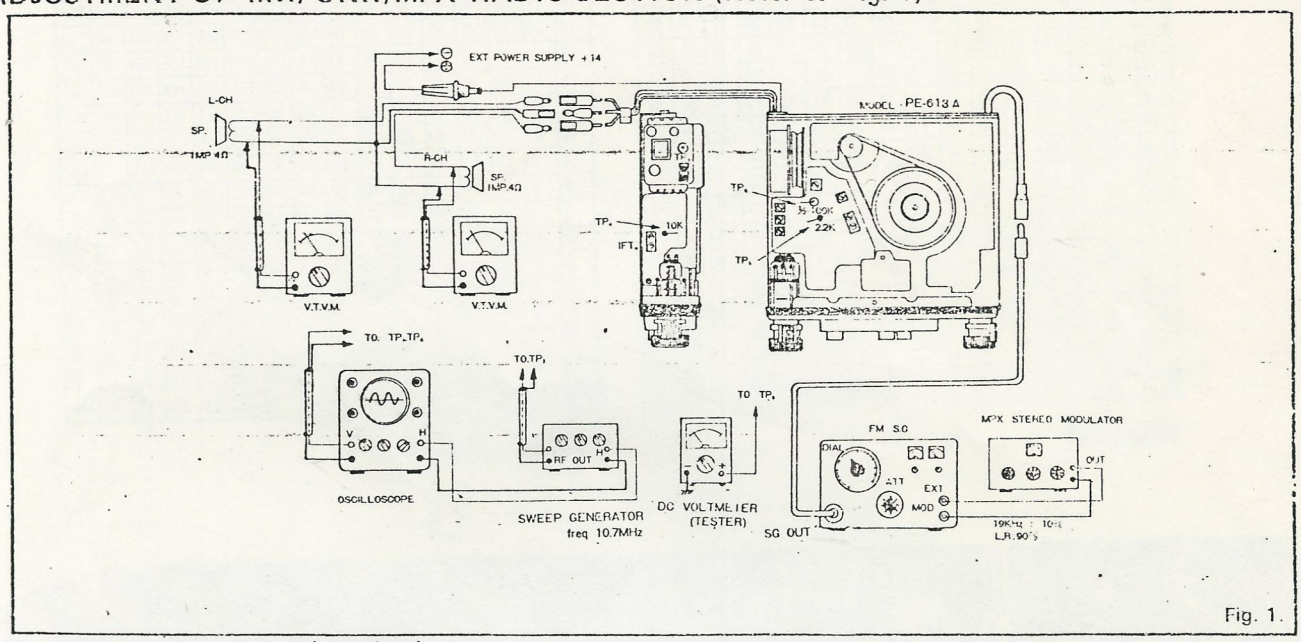

Fig. 1.

A. Adjustment of AM (MW) IF circuit:

(a) Connect the sweep generator output of the RF trimmer (TP3) and the vertical axis of the oscillator to the TP2 (R18, 10KΩ)

(b) As the sweep generator output is raised, the waveform given in Fig. 2 will appear.
Adjust each IFT (IFT. 1~3) to obtain the highest peak and fine shape in the waveform.

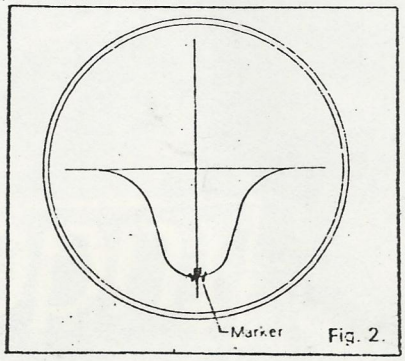

Fig. 2.

B. Adjustment of AM (MW) RF circuit

(a) Connect V.T.V.M to the output terminal and an AM signal generator to the ANT receptacle, at the same time insert the dummy as shown in Fig. 3 between the ANT receptacle and the MW signal generator.

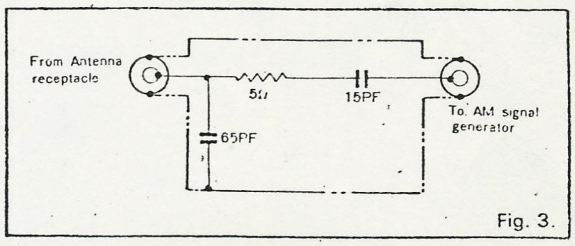

Fig. 3.

(b) Set the radio at the highest frequency position and the signal generator at 1,720KHz, and adjust the MW OSC trimmer (TC3) to 1,720KHz.

(c) Set the radio at the lowest frequency position and the signal generator at 520KHz and adjust the MW OSC COIL (L3) to 520KHz.

(d) Attempt adjustments ⓑ and ⓒ above two or three times. The adjustment of the band widths are complete.

(e) Set the MW signal generator and radio reception frequency to 1,400KHz, then adjust the ANT RF trimmer (TC1, TC2) to obtain the maximum selectivity.

C. Adjustment of FM (UKW) IFT circuit: (Refer to Fig. 1)

(a) Connect the sweep generator to TP3 and the vertical axis cable of the oscilloscope to TP4.
Set the radio dial to a position at which the least disturbance on the high side of the broadcasting signal appears.

(b) As the sweep generator output is increased the waveform similar to Fig. 4 will appear.
Adjust the two IFTs in the FM TUNER PACK to obtain maximum gain and band width.

(c) Next, connect the oscilloscope's previously connected TP.4 lead to the to TP.6. The waveform should be similar to Fig. 5. Adjust the primary and secondary coils of the IFT.4 to obtain a waveform with the highest/lowest peaks and superior linearity at the center position while performing the fine adjustments with the IFT in the FM PACK.

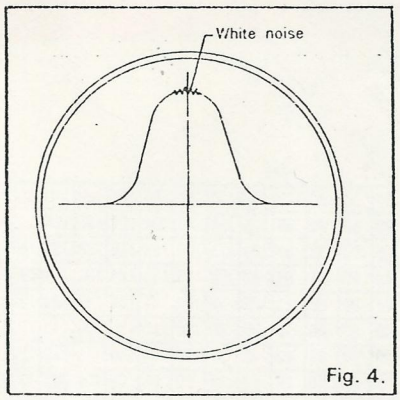

Fig. 4.

D. Adjustment of FM (UKW) RF circuit: (FM TUNER PACK)

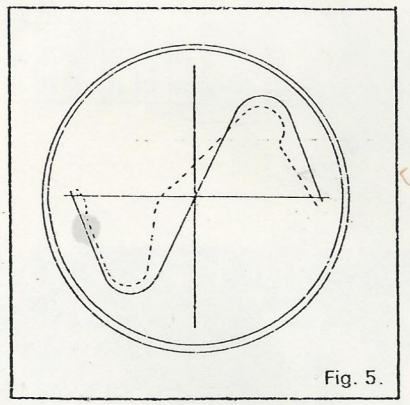
Fig. 5.

(a) Local oscillator
Set the radio at the lowest frequency position and set the FM signal generator or 87.5MHz, and then adjust the OSC trimmer to 87.5MHz.

(b) ANT RF
Set the FM signal generator or 98MHz and adjust the RF trimmer to obtain maximum sensitivity.

E. Adjustment of FM MPX pilot carrier:

(a) Set the semi-fixed VR (012-3286-00) to the center position, set the FM signal generator output on 55dB at 98MHz and set the STEREO modulator to obtain the FM signal generator's deviation of 7.5KHz with only the pilot carrier of 19KHz.

(b) Connect a tester with DC. 10V range to TP.5 and adjust L11 and L13 (010-1300-01) to obtain a maximum reading.

F. Adjustment of channel separation:

(a) Connect the output meter to the L and R channel output terminals and switch the stereo modulator mode to either L or R. The sound lever is 90% for both L and R.

(b) Make all fine adjustments with the L13 (010-1310-01) to obtain the maximum degree of separation.

(c) Make all fine adjustments with the VR 1KΩ (012-3286-00) to obtain the maximum degree of separation.

(d) Attempt the above procedures (b) and (c) several times to balance both channels and achieve maximum degree of separation.

*ADJUSTMENT OF MECHANISM:

o **Adjustment of head location and angle**

If the location and angle of the head is not correct in respect to the tape, there will be insufficient sound, poor tone or crosstalk. When these occur, perform adjustment by means of the area adjusting screw and azimuth adjusting screw on the rear of the head location.

o **Adjustment of head area** (Refer to Fig. 6.)

1. Balance left and right sides with the balance adjusting knob.
2. Set the head location to the 2-6 track position (program indicator shows No. 2) with the test tape for area adjustment and adjust by turning the area adjusting screw to obtain maximum output.
3. After the above steps, adjust the 1-5, 3-7, and 4-8 track positions in the same manner.

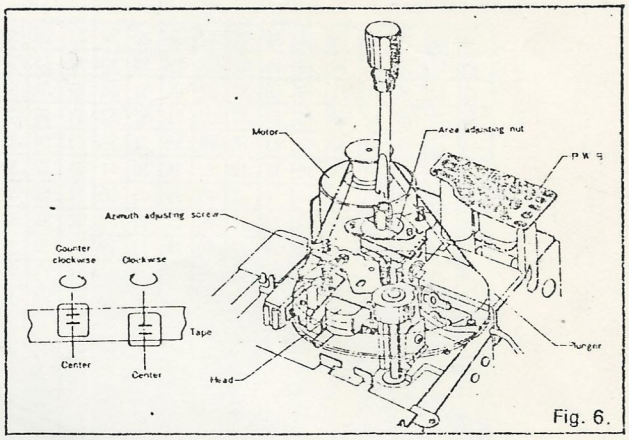

Fig. 6.

o **Adjustment of head azimuth** (Refer to Fig. 7.)

1. Set the location of the head to the 2-6 track position with the test tape for azimuth adjustment and adjust to obtain maximum output.
2. Area adjustment may deviate because of azimuth adjustment. Therefore, repeat azimuth and area adjustments several times.

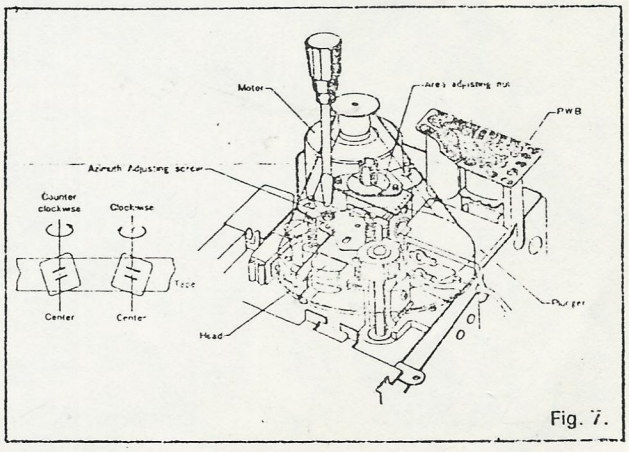

Fig. 7.

* Troubleshooting Guide (Repair of the Mechanism)

Refer to circuit diagram and printed circuit board.

Symptom	Defective circuit		Defective Point and Cause	Corrective action
No sound	Power supply circuit		o Fuse open. o Choke transformer (009-0450-02) open. o D4 (diode) open. o Faulty connect in the Radio/ Tape changeover switch. o Defective power supply switch.	o Replace. o Replace. o Replace. o Replace. o Replace.
	Output circuit		o Speaker voice coil open. o C115 or C165 open. o Faulty connection between speaker and Extension lead . o Defective power IC (051-0010-00).	o Replace speaker. o Replace. o Reconnect. o Replace.
	Preamplifier circuit		o Defective pre IC (051-0011-00). o Head lead open. o Faulty contact in the Tape/Radio changeover switch.	o Replace. o Replace or solder. o Replace.
	MPX circuit		o MPX IC (051-0012-00) defective. o Semi-fixed VR (1K Ω) open. o C62 open,	o Replace. o Replace. o Replace.
	RF, IF or detection circuit	AM section	o Q1, Q2, Q3 or Q4 defective. o D1 (1S1555) defective. o IFT.1 ~ IFT.3 open. o L1 ~ L 4 open.	o Replace. o Replace. o Replace. o Replace.
		FM section	o Ceramic filter malfunction. o Defective Q5, Q6, Q7, or Q8 o IFT.4 open. o Defective FM tuner pack.	o Replace. o Replace. o Replace. o Replace FM pack.
Insufficient sound	Output circuit		o Defective 051-0010-00 (Power IC) o Defective speaker. o Poor contact between output terminal speaker.	o Replace. o Replace. o Carefully reconnect.
	Preamplifier circuit		o 051-0011-00 (Pre IC) defective. o Defective head. o Dirty head surface.	o Replace. o Replace. o Clean surface gap of the head with alcohol.
	RF, IF or detection circuit	AM section	o Deviation in IF transformer IFT.1 ~ 3 tuning. o Deviation in tracking adjustment. o Broken tuner core. (L2, L4, L5) o D1 (1S1555) deteriorated. o Poor antenna contact. o Defective Q1 ~ Q4.	o Readjust. o Readjust. o Replace core. o Replace. o Reconnect car antenna. o Replace.
		FM section	o Deviation in 005-0684-00 (IFT.4) adjustment. o Defective 005-0685-00 (Ceramic filter). o Defective D2 or D3 (1S1555). o Defective Q5 ~ Q8	o Readjust. o Replace. o Replace. o Replace.
	Output and preamplifier circuit		o Defective speaker. o Defective power IC (051-0010-00) o Defective Pre IC 051-0011-00)	o Replace. o Replace. o Replace.

Symptom	Defective circuit		Defective Point and Cause	Corrective action
Sound distortion	Detecting circuit	AM section	o Defective D1 (1S1555). o R18 opens.	o Replace. o Replace.
		FM section	o Defective D2 or D3 (1S1555). o Detecting transformer IFT4 (005-0684-00) adjustment deviation.	o Replace. o Readjust to obtain correct S surve.
Oscillation	Power supply circuit		o C64 or C204 capacity drops or opens. o Defective ZD1 or ZD2 (Zenor diode).	o Replace. o Replace.
	Output and preamplifier circuit		o Capacity drop of external capacitors (051-001-00 and 051-0011-00) power IC and pre IC .	o Replace.
	IF or RF circuit	AM section	o Defective C12 or C18. o R12 open.	o Replace. o Replace.
		FM section	o Defective C56 o R51 open. o Defective IF final stage decoupling element. o Defective FM tuner pack.	o Replace. o Replace. o Replace. o Replace.
Loss of stereo stereo effect	MPX circuit		o Improper adjustment of MPX circuit. o Defective mono/stereo changeover switch. o MPX IC (051-0012-00). o L11, L12 or L13 open.	o Readjust. o Replace. o Replace. o Replace.
Loss of AFC	AFC circuit		o C73 short circuited. o R58 open. o Defective AFC diode in FM tuner pack.	o Replace. o Replace. o Replace FM tuner body.
ST indicator Light	Indicator circuit		o Stereo indicator lamp open. o R75 open.	o Replace. o Replace.
Motor failure	Motor circuit		o Defective motor. o Defective choke (009-0583-01). o C214 (16-470) short circuited.	o Replace. o Replace. o Replace.
Wow and flutter is extreme	Flywheel drive section		o Defective flywheel or capstan. o Dirty belt. o Defective tape cartridge. o Defective Motor	o Replace. o Clean with alcohol. o Clean with alcohol. o Replace.
Program select switching failure	Plunger circuit		o Defective plunger. o Defective program changeover switch. o Defective RD1 (1S1943).	o Replace. o Replace. o Replace.
Plug noise is extreme	Motor compartment		o No noise silencer in ignition coil and alternator. o No resistance wire in high tension cord. o No jumper wire between engine body and engine and between transmission and engine body.	o Mount specified noise silencer. o Insert noise preventing resistor between ignition coil and distributor. o Connect engine and engine body with jumper wire at positions making the least noise.

* PRINTED WIRING BOARD: (Refer to CIRCUIT DIAGRAM)

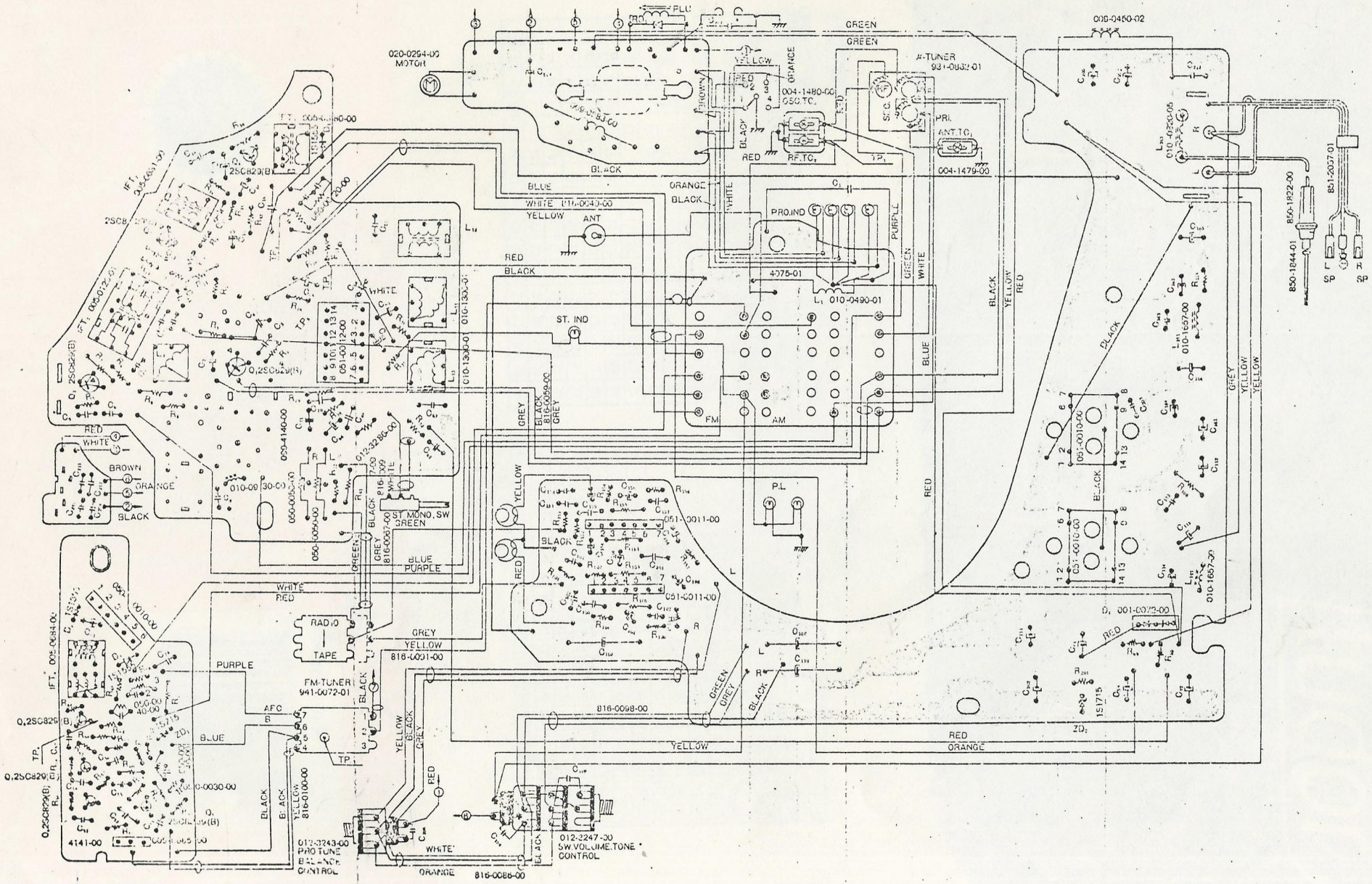

*CIRCUIT DIAGRAM: (Voltage and current values entered.)

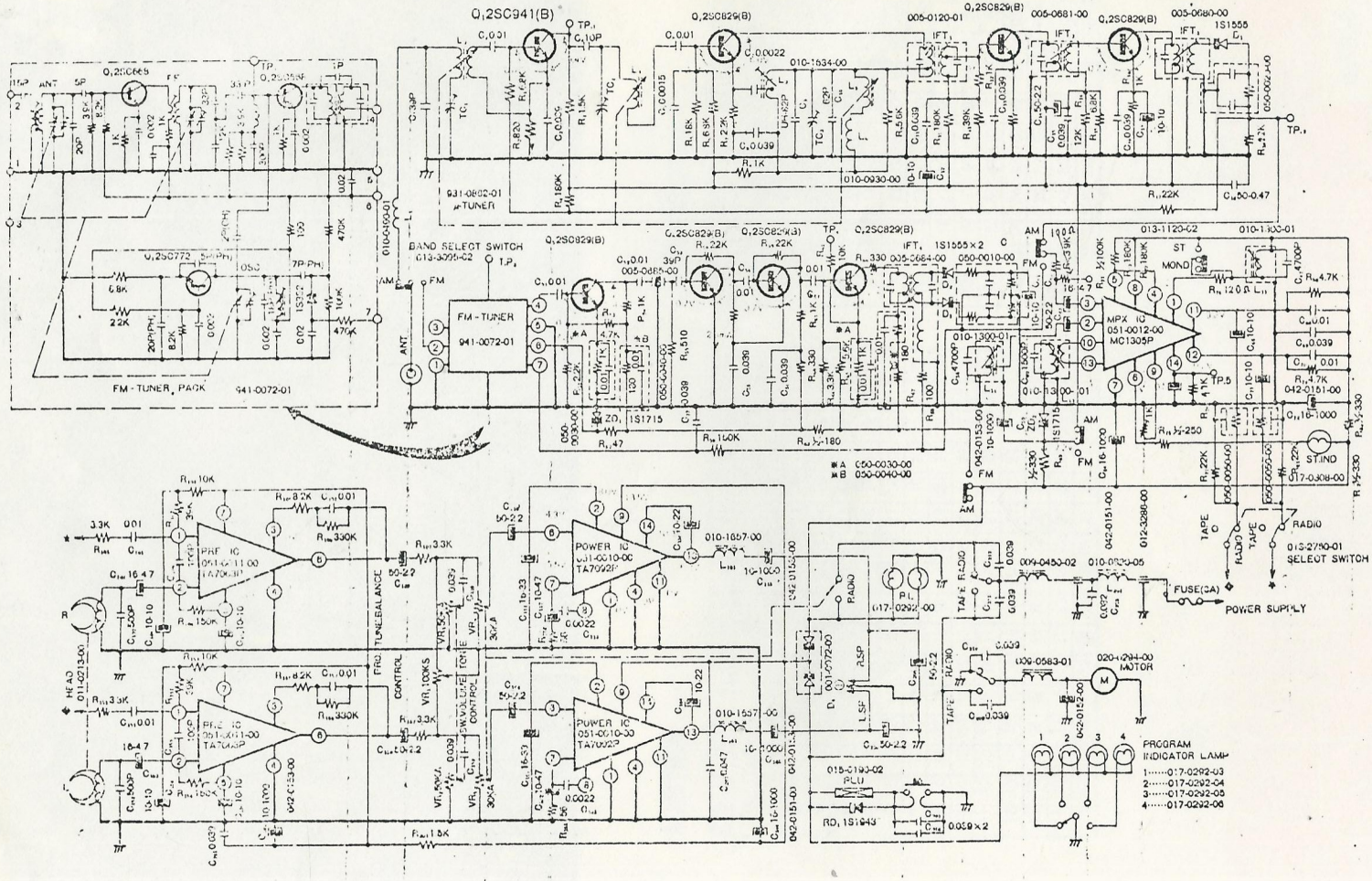

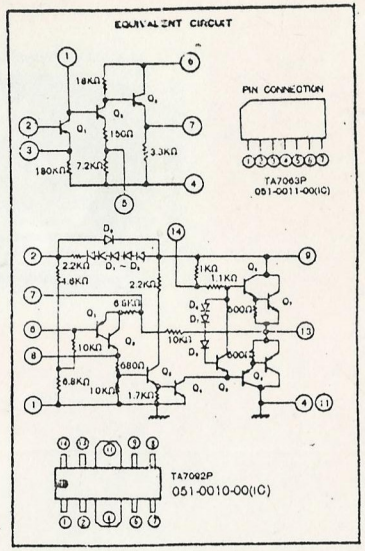

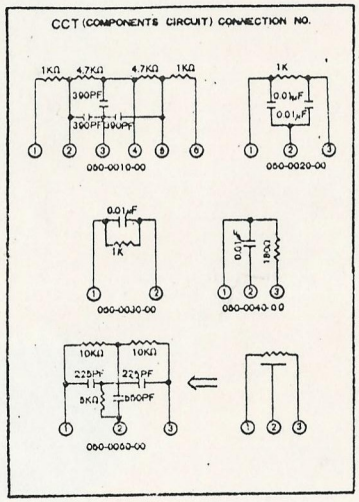

NOTE-1
Conduct measurements, under no signal conditions with a tester having an internal resistance of 20KΩ/V and at the following range
2.5V or greater 10V range.
0.5V or greater 2.5V range
Below 0.5V 0.5V range.
Measurement value may be different, if measured by wrong range.

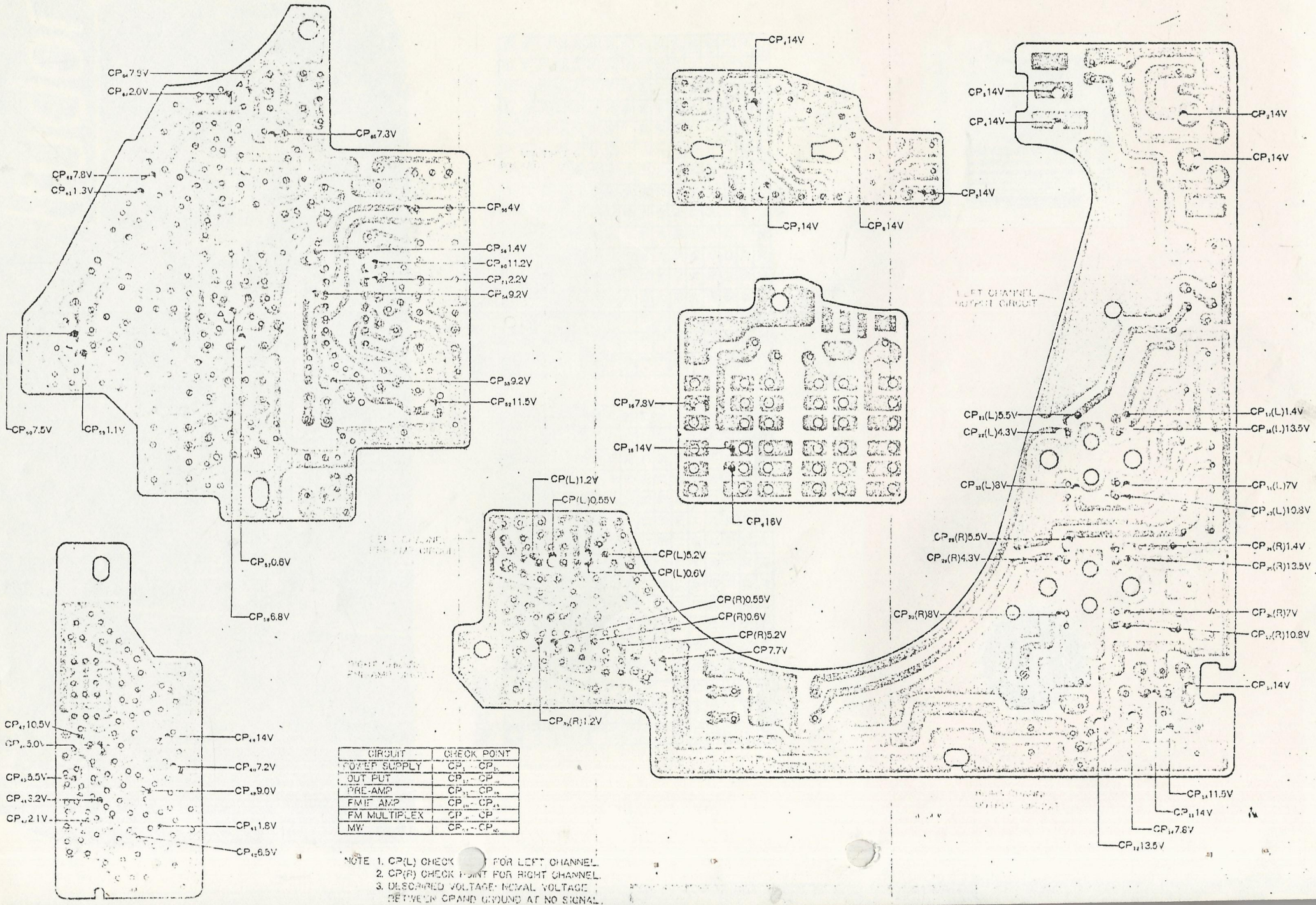

CIRCUIT	CHECK POINT
POWER SUPPLY	CP1 - CP13
OUT PUT	CP17 - CP20
PRE-AMP	CP21 - CP28
FM IF AMP	CP40 - CP49
FM MULTIPLEX	CP[illegible] - CP[illegible]
MW	CP[illegible] - CP[illegible]

NOTE 1. CP(L) CHECK [illegible] FOR LEFT CHANNEL.
2. CP(R) CHECK POINT FOR RIGHT CHANNEL.
3. DESCRIBED VOLTAGE: NORMAL VOLTAGE BETWEEN CP AND GROUND AT NO SIGNAL.

* EXPLODED VIEW:

⊙Main unit section : The dot lined portion in the diagram is the assembly.

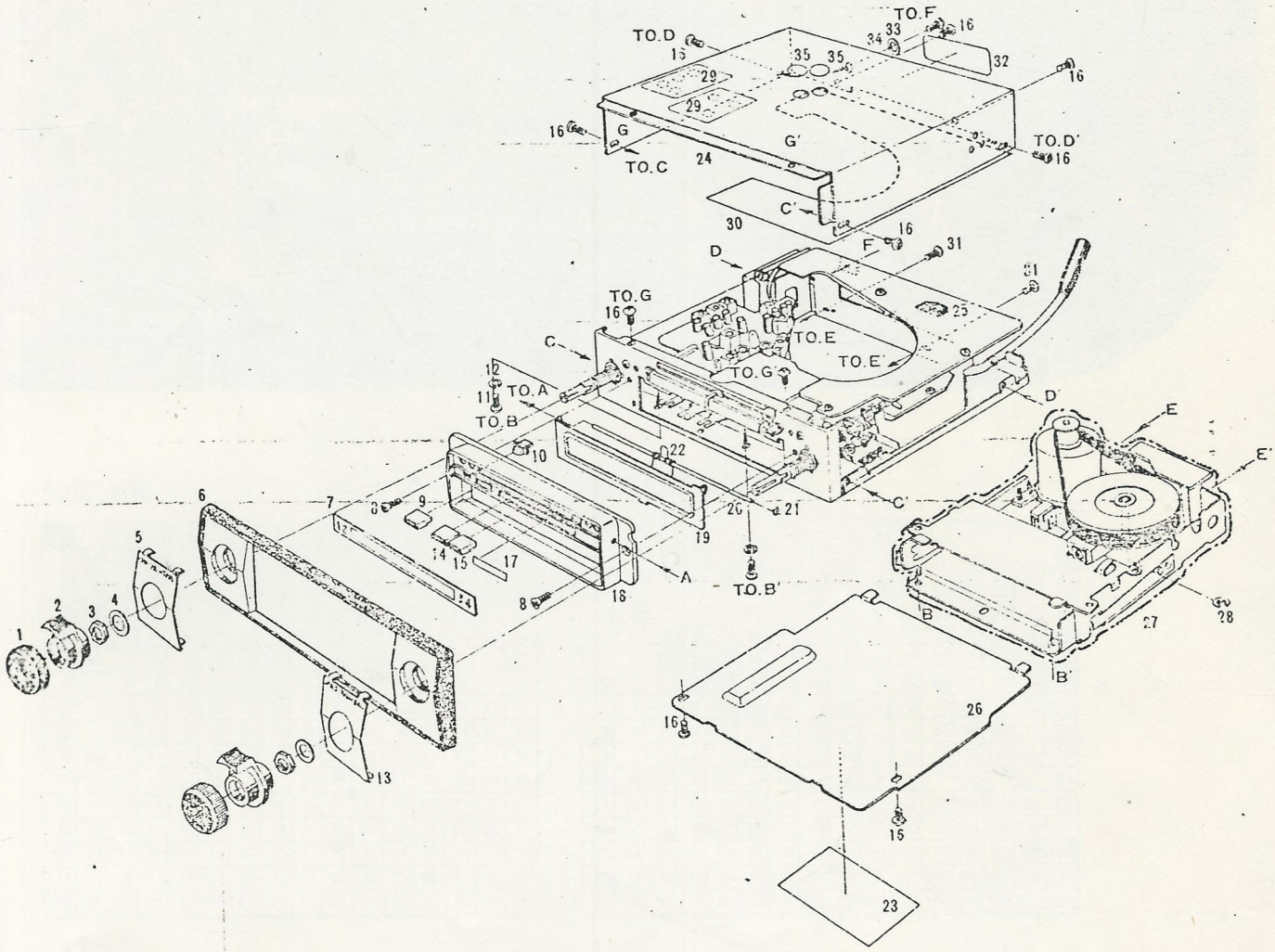

* PARTS LIST: Main unit section (Refer to Exploded view : Grey portions in the Parts list designate assemblies.)

REF.NO	PART NO	DESCRIPTION	P.C.S	REF.NO	PART NO	DESCRIPTION	P.C
1	380-3335-00	Knob	2	20	341-0929-00	Shaft	1
2	380-3336-02	Knob	2	21	743-1500-00	E-Ring (M1.5)	1
3	722-0231-00	Special nut	2	22	750-1236-00	Spring	1
4	745-0430-01	Special washer	2	23	285-0587-01	Guide label	1
5	371-2357-00	Trim plate (SW.VOL.TONE)	1	24	310-0766-03	Upper case	1
6	370-2810-00	Escutcheon	1	25	345-1960-00	Rubber cuhion	1
7	372-2570-06	Dial plate	1	26	304-0252-00	Lower case	1
8	714-3006-41	Machine screw (M3×6)	2	27	930-0405-05	Tape mechanism assembly	1
9	380-3356-00	Knob (ST.MO)	1	28	743-4000-00	E-Ring (M4)	1
10	375-0522-00	Pilot lamp accessory	1	29	285-0604-00	Guide label	2
11	714-3004-11	Machine screw (M3×4)	2	30	347-0358-00	Insulating paper	1
12	741-3000-20	Spring washer (M3)	2	31	730-3006-59	Tap tight (M3×6)	2
13	371-2356-00	Trim plate (PRO.TUN.BAL)	1	32	286-3678-00	Set plate	1
14	380-3356-01	Knob (FM)	1	33	732-3006-11	Sems screw (M3×6)	1
15	380-3356-02	Knob (AM)	1	34	740-3000-11	Flat washer (M3)	1
16	714-3006-11	Machine screw (M3×6)	10	35	740-2438-00	Label	2
17	371-2365-00	Trim plate	1				
18	370-2825-03	Escutcheon (Chrome)	1				
19	320-0176-10	Dust proof cover	1				

⊙Electrical section : The dot lined portion in the diagram is the assembly.

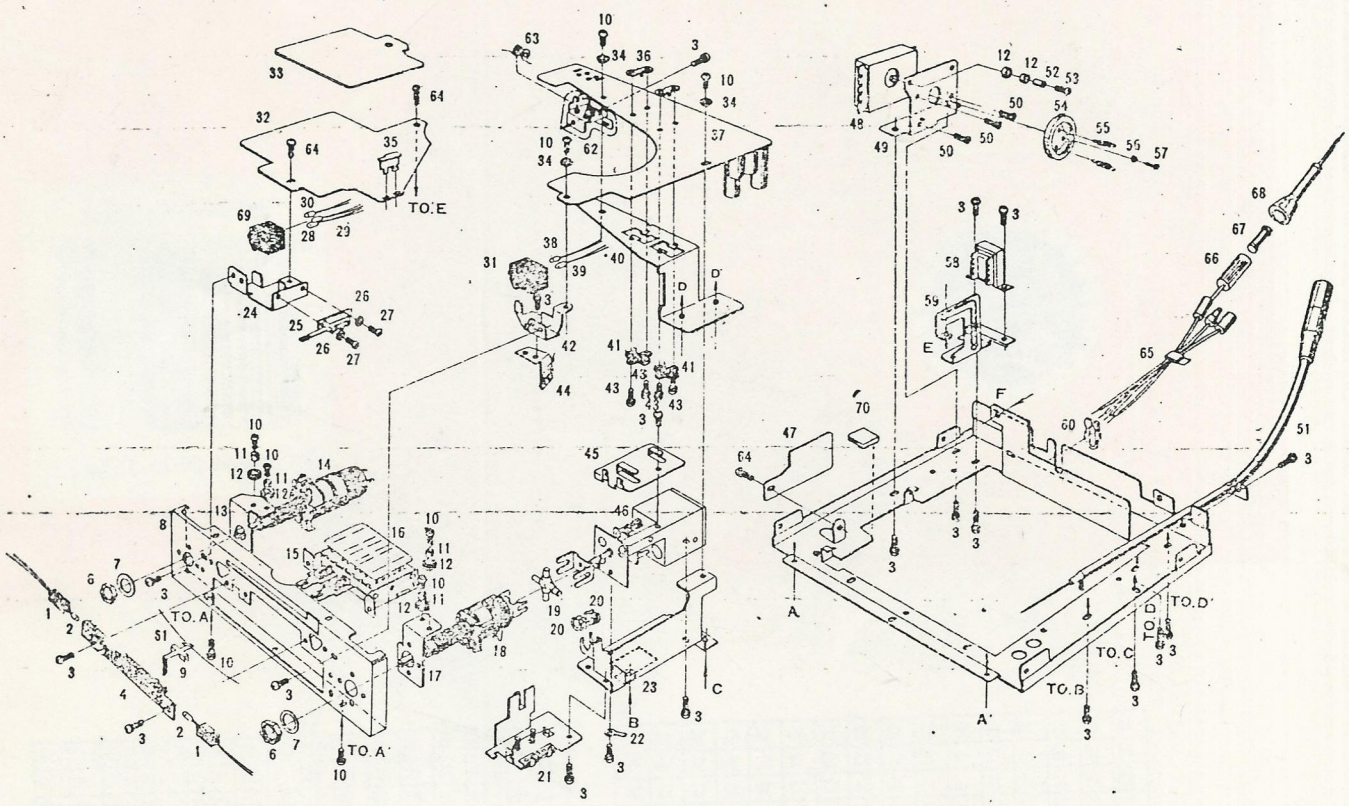

＊PARTS LIST: Electrical section (Refer to Exploded view : Grey portions in the Parts list designate assemblies.)

REF.NO	PART NO	DESCRIPTION	P.C.S	REF.NO	PART NO	DESCRIPTION	P.C.S
1	345-2382-00	Pilot lamp holder	2	36	330-4960-01	IC attaching plate	2
2	017-0292-17	Pilot lamp	2	37	099-4079-00	Printed circuit board (Pre. output)	1
3	732-3006-11	Sems screw (M3×6)	20	38	017-0292-05	Pilot lamp (Program NO.3)	1
4	374-0942-01	Back plate	1	39	017-0292-06	Pilot lamp (Program NO.4)	1
5	311-0820-02	Lower case	1	40	313-0829-00	Heat sink	1
6	722-0231-00	Special nut	2	41	051-0010-00	IC (Power IC)	2
7	745-0430-01	Special washer	2	42	330-4996-00	Pilot lamp holder mounting bracket	1
8	303-0821-02	Front cover	1	43	732-3008-11	Sems screw (M3×8)	4
9	376-0745-01	Dial pointer	1	44	004-1479-00	Trimmer	1
10	714-3006-11	Machine screw (M3×6)	9	45	330-5000-01	Antenna receptacle mounting plate	1
11	340-0335-00	Spacer	4	46	931-0862-03	3-coil manual tuner	1
12	335-0460-00	Dial cord ring	6	47	099-4141-00	Printed circuit board (FM. MPX)	1
13	330-5044-00	Dial cord ring mounting plate	1	48	941-0072-01	FM-Tuner pack	1
14	012-3247-00	Variable resistor (SW. VOL. TONE)	1	49	330-5043-02	Tuner pack mounting plate	1
15	013-3095-02	Push switch (AM. FM)	1	50	714-2604-40	Machine screw (M2.6×4)	3
16	347-0377-00	Insulating paper	1	51	092-0432-03	Antenna receptacle	1
17	330-4994-01	Dial cord ring mounting plate	1	52	340-0337-00	Speacer	1
18	012-3389-00	Variable resistor (PR0. BAL)	1	53	714-3008-11	Machine screw (M3×8)	1
19	335-0310-01	Tuner shaft joint	1	54	335-0674-00	Dial cord wheel	1
20	335-0250-00	Dial cord ring	2	55	750-0720-00	Spring	2
21	004-1480-00	Trimmer	1	56	740-1700-30	Flat washer (M1.7)	1
22	321-0599-00	Clamp	1	57	715-1705-50	Machine screw (M1.7×5)	1
23	330-5042-00	μ-Tuner mounting bracket	1	58	099-0450-02	Choke	1
24	330-5157-00	Switch mounting bracket	1	59	330-5107-00	Choke mounting bracket	1
25	013-1120-02	Pusu switch (ST. MO)	1	60	335-0580-00	Cord clamp	1
26	741-2000-20	Spring washer (M2)	2	61	880-1999-00	Dial cord	1
27	714-2004-10	Machine screw (M2×4)	2	62	914-0399-00	Filter assembly	1
28	017-0308-00	Pilot lamp (ST indicator)	1	63	010-0820-05	Filter coil	1
29	017-0292-04	Pilot lamp (Program NO.2)	1	64	714-3004-11	Machine screw (M3×4)	3
30	017-0292-03	Pilot lamp (Program NO.1)	1	65	851-2057-01	Speaker cord	1
31	345-2381-00	Pilot lamp holder	1	66	850-1822-00	Power supply cord	1
32	099-4140-00	Printed circuit board (Radio use)	1	67	120-0030-00	Fuse (3A)	1
33	099-4075-01	Printed circuit board (Push switch use)	1	68	850-1844-01	Power supply cord	1
34	742-3050-20	Toothed washer (M3)	3	69	345-2449-00	Pilot lamp holder	1
35	330-5112-00	Printed circuit board mounting plate	1	70	347-0128-00	Insulating paper	1

⊙Mechanism section : The dot lined portion in the diagram is the assembly.

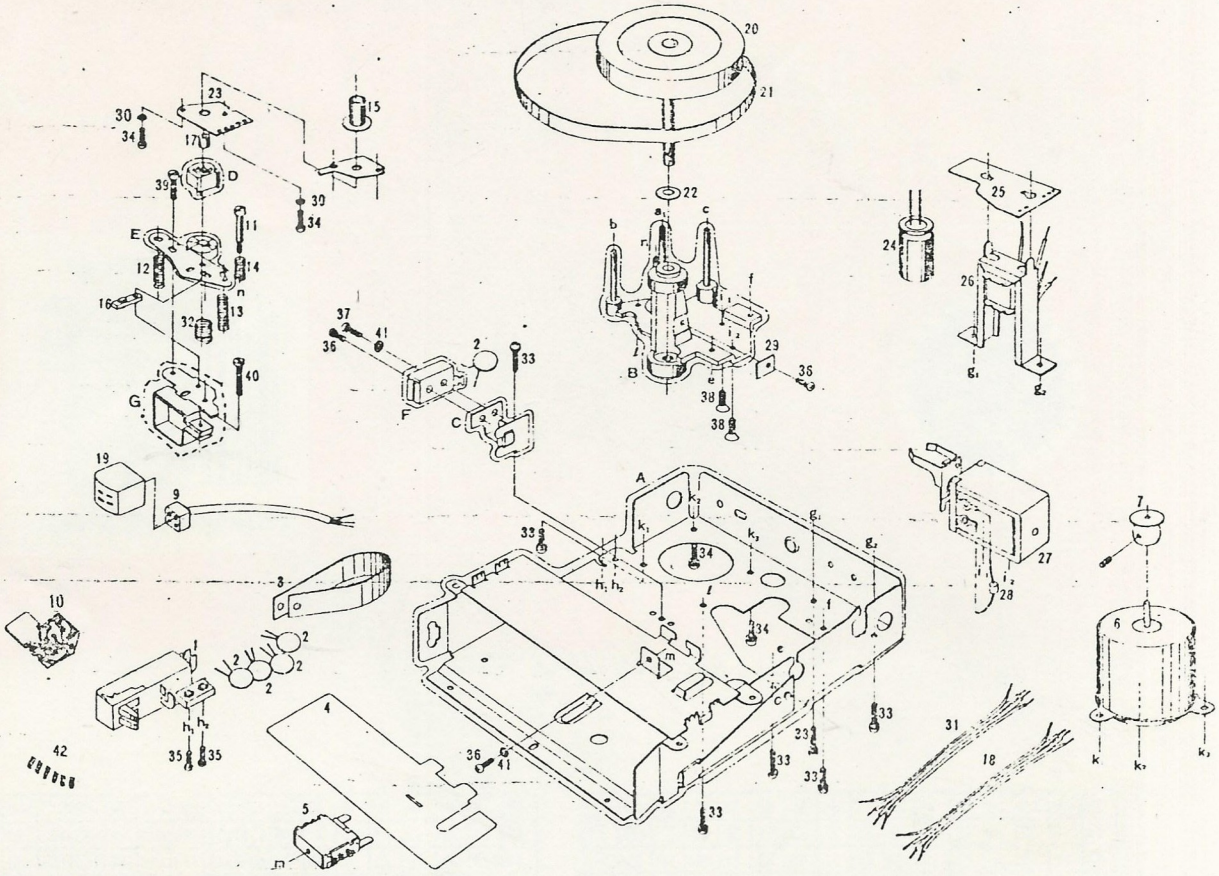

*MECHANISMS PARTS LIST:

(Refer to the mechanism Exploded view)

REF. NO.	PART NO.	DESCRIPTION	P.C.S
1	013-3090-03	Switch	1
2	043-0022-00	Special capacitor (250V0.04μF)	5
3	631-0076-00	Guide plate	1
4	347-0349-00	Insulating paper	1
5	013-2760-01	Switch	1
6	020-0294-01	Motor	1
7	603-0022-00	Motor pulley	1
8	630-0713-01	Rotary plate	1
9	852-4569-01	Extension lead	1
10	099-4167-00	Printed wiring board	1
11	716-0212-01	Special screw	1
12	750-1411-00	Spring	1
13	750-1410-00	Spring	1
14	750-1403-00	Spring	1
15	631-0089-00	Area adjustment nut	1
16	631-0090-00	Spacer	1
17	632-0302-00	Sleeve holder	1
18	816-0069-00	Special lead	1
19	011-0213-00	Head	1
20	611-[illegible]	Flywheel	1
21	602-0012-00	Belt	1
22	716-0620-00	Special washer	1
23	099-4002-02	Printed circuit board	1
24	180-[illegible]	Electrolytic capacitor (VL16V470μF)	1
25	099-4033-00	Printed circuit board	1
26	[illegible]	Chassis	1
27	[illegible]	Plunger	1
[illegible]	[illegible]	[illegible]	1
[illegible]	[illegible]	Reel protector	1
[illegible]	[illegible]	Spring washer (M2)	2
31	[illegible]	Special lead	1
32	750-1475-00	Spring	1
33	732-3006-11	Semi screw (M3×6)	9
34	714-2006-11	Machine screw (M2×6)	2
35	714-2308-11	Machine screw (M2.3×8)	2
36	714-2606-11	Machine screw (M2.6×6)	3
37	714-2608-11	Machine screw (M2.6×8)	1
38	714-3006-41	Machine screw (M3×6)	2
39	715-3010-61	Machine screw (M3×10)	1
40	715-2608-61	Machine screw (M2.6×10)	1
41	[illegible]	Spring washer (M2.6)	2
42	[illegible]	Varn lead wire	6

*MECHANISMS ASSEMBLIES PARTS LIST:

REF. NO.	PART NO.	DESCRIPTION	P.C.S
A	960-2758-00	Deck plate assembly	1
	600-0041-03	Deck plate	1
	605-0042-00	Pack guide	1
	960-2627-00	Roller assembly	1
	728-3040-87	Nylon (3φ×4)	2
B	960-2726-03	Housing assembly	1
	612-0098-01	Shaft	2
	612-0099-03	Shaft	1
	609-0027-00	Bearing	1
	609-0028-00	Bearing	1
	607-0016-01	Housing	1
C	960-2705-01	Tape guide assembly	1
	605-0026-00	Tape guide	1
	631-0109-00	Cap	1
D	960-2732-00	Ratchet assembly	1
	631-0075-01	Ratchet	1
	750-1401-01	Spring	1
E	960-2734-00	Cam assembly	1
	608-0023-02	Cam	1
	630-0548-00	Stay	1
F	960-0360-02	Contact assembly	1
G	960-2799-02	Head clamp assembly	1
	630-0328-02	Head clamp	1
	630-0339-02	Head holder	1