CLARION SERVICE MANUAL

MINI TYPE CAR STEREO

MODEL PE-430A

CLARION SHOJI. CO., LTD.
NEW KOJIMACHI BLDG., 3, 5-CHOME, KOJIMACHI, CHIYODA-KU, TOKYO, JAPAN. PHONE NO. 265-2931~4
USA BRANCH: CLARION SHOJI. CO., LTD. (U.S.A.)
2306 COTNER AVENUE, LOS ANGELES, CALIF., 90064, U.S.A. PHONE NO. 272-1178. 272-1169. 479-5556.
EUROPE BRANCH: CLARION SHOJI (EUROPA) G.m.b.H.
2000 HAMBURG 76, SCHÖNE AUSSICHT 35. GERMANY. PHONE: 2207667

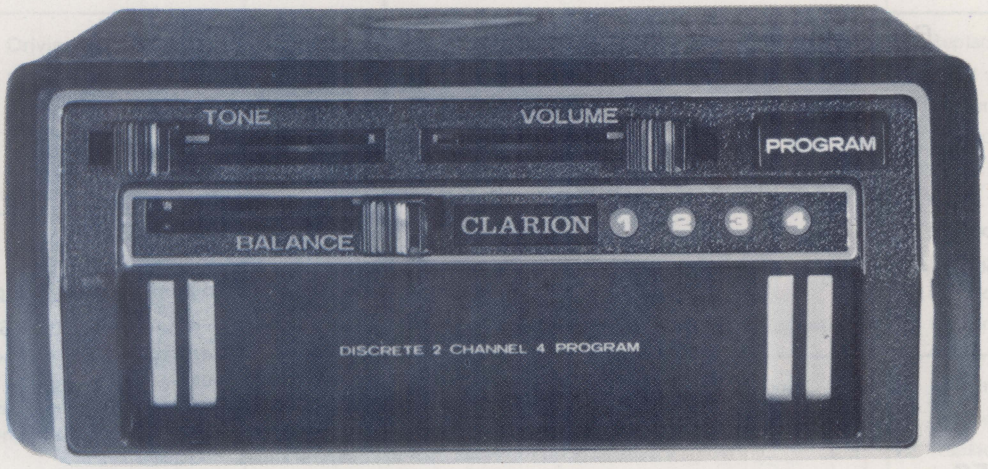

*SPECIFICATIONS

Reproduction;	8 track, 4 program, 2 channel
Tape speed;	3.75 ips. (9.5 cm/sec)
Wow and flutter;	Less than 0.3%
S/N ratio;	More than 45dB
Power amplitude;	More than 100dB
Crosstalk;;	More than 30dB (at adjacent channel)
	More than 40dB (at adjacent track)
Reproduction frequency range;	50~10,000Hz
Load impedance;	4Ω x 2
Power output;	More than 3.5W x2 (for 10% distortion)
	More than 6.0W x2 (for Max. Volume)
Power supply voltage;	DC 14V (10.8V~15.6V), negative ground
Power consumption;	Less than 1.2A (at Max. output)
	Less than 3.0A (at plunger operated)
Semiconductors;	10 transistors, 1 diode and 4 thermistors
	Pre amplifier ..... 2SC732 x 2, 2SC373 x 2
	Driver amplifier... 2SC735 x 2
	Power amplifier .. 2SB461 x 4
	Transient suppressor ..... 1S1943 x 1
Weight;	3.5 lb (1.6 Kg)
Dimensions;	Width: 5.5" (140mm)
	Height: 2.16" (55mm)
	Depth: 7.1" (181mm)
	Effective depth: 5.9" (150mm)

*COMPONENT VIEW:

	Main unit	1 Set
280-3102-00	Owners guide	1 Each
300-5074-00	Mounting bracket	1 Each

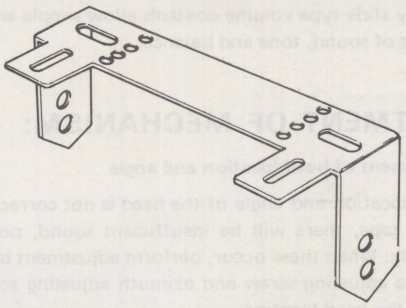

300-4976-00	Mounting bracket	1 Each

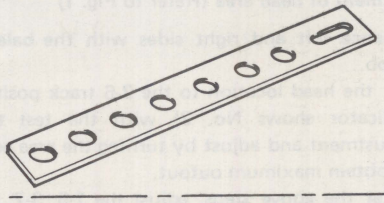

852-4649-00	Extention lead	1 Each

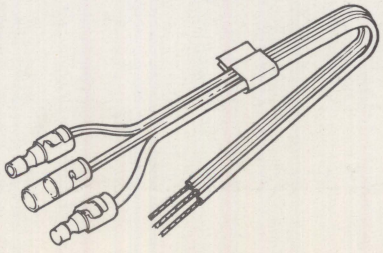

Printed in Japan 298-1637-00

370-2851-01 Escutchcan 1 Each

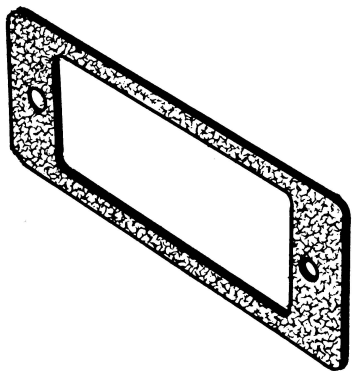

921-5701-01 Part's bag 1 Set

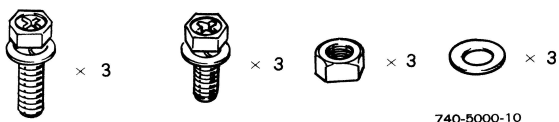

734-5016-31
D-SEMS HEX BOLT
(M5×0.8×16)

734-5010-31
D-SEMS HEX BOLT
(M5×0.8×10)

723-5000-11
HEX NUT
(M5×0.8)

740-5000-10
FLAT WASHER
(M5)

* FEATURES:

o Mini car stereo
Very compact, light weight, 8 track and 4 program reproduction unit specially designed for automobiles.

o Number lighting type indicator
By the employment of number lighting type indicator, the reproduction program in use can be identified at a glance.

o Completely slide-type volume controls
Completely slide type volume controls allow simple and accurate adjustment of sound, tone and balance.

* ADJUSTMENT OF MECHANISM:

o **Adjustment of head location and angle**

If the location and angle of the head is not correct in respect to the tape, there will be insufficient sound, poor tone or crosstalk. When these occur, perform adjustment by means of the area adjusting screw and azimuth adjusting screw on the rear of the head location.

o **Adjustment of head area** (Refer to Fig. 1)

1. Balance left and right sides with the balance adjusting knob.
2. Set the head location to the 2-6 track position (program indicator shows No. 2) with the test tape for area adjustment and adjust by turning the area adjusting screw to obtain maximum output.
3. After the above steps, adjust the 1-5, 3-7, and 4-8 track positions in the same manner.

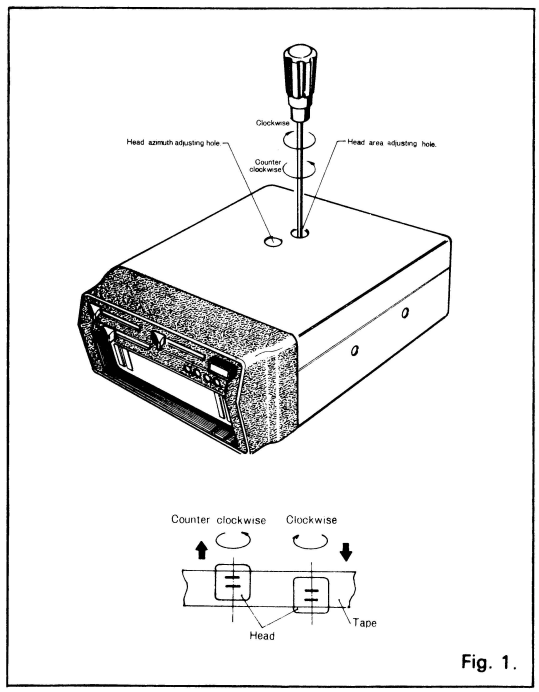

Fig. 1.

o **Adjustment of head azimuth** (Refer to Fig. 2)

1. Set the location of the head to the 2-6 track position with the test tape for azimuth adjustment and adjust to obtain maximum output.
2. Area adjustment may deviate because of azimuth adjustment. Therefore, repeat azimuth and area adjustments several times.

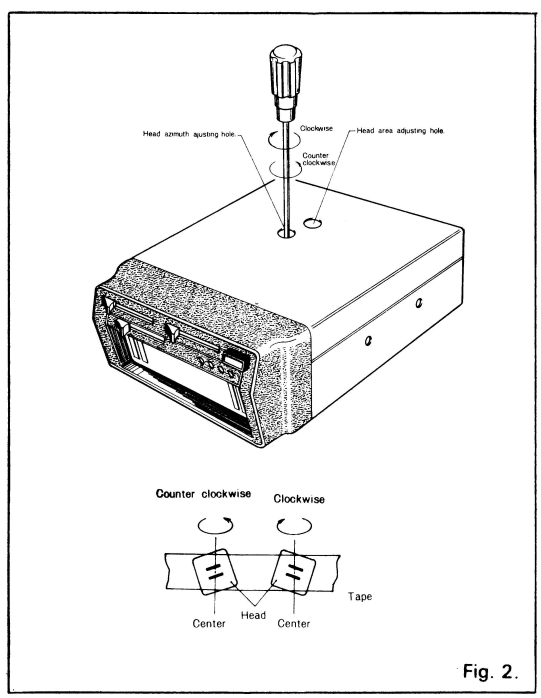

Fig. 2.

* TROUBLESHOOTING REMEDIAL PROCEDURES: (mechanism section) Refer to Disassembly Figure.

Symptom	Defective circuit (point)	Trouble location and cause	Remedy
Head switching in possible	Plunger circuit Head switching mechanism	o Faulty contact or defective plunger switch mechanism. o 1S1943 (diode) shorted. o Plunger coil layer shorted. o Solenoid contact defective. o Faulty clutching of rachet and rachet kick. o Incomplete wiring of head lead. o Tape defective.	Replace. Replace. Replace. Replace Repair or replace. Repair. Replace.
Crosstalk occurs	Head shift mechanism	o Shape of tape pack improper. o Faulty adjustment of area.	Replace. Adjust.
High or wow abnormal speed.	Driving mechanism system	o Flywheel defective. o Belt defective o Grease accumulated on pulley, belt or flywheel. o Grease or dirt accumulated on capstan. o Oilless bearing broken. o Motor defective. o Tape pack defective. o Tape protector contacts with capstan due to deformation.	Replace (always insert special washer). Replace. Clean. Clean. Replace. Replace. Replace. Repair.
Channel indicator.		o Coupling rod between pointer and lever disengaged. o Loosened screw secruing lever sleeve. o Pilot lamp or lead wire open or faulty soldering. o Faulty contact of rotary switch or accumulated dirt.	Repair. Repair. Replace or repair. Repair or clean.

* PRINTED WIRING BOARD:
(Refer to circuit diagram)

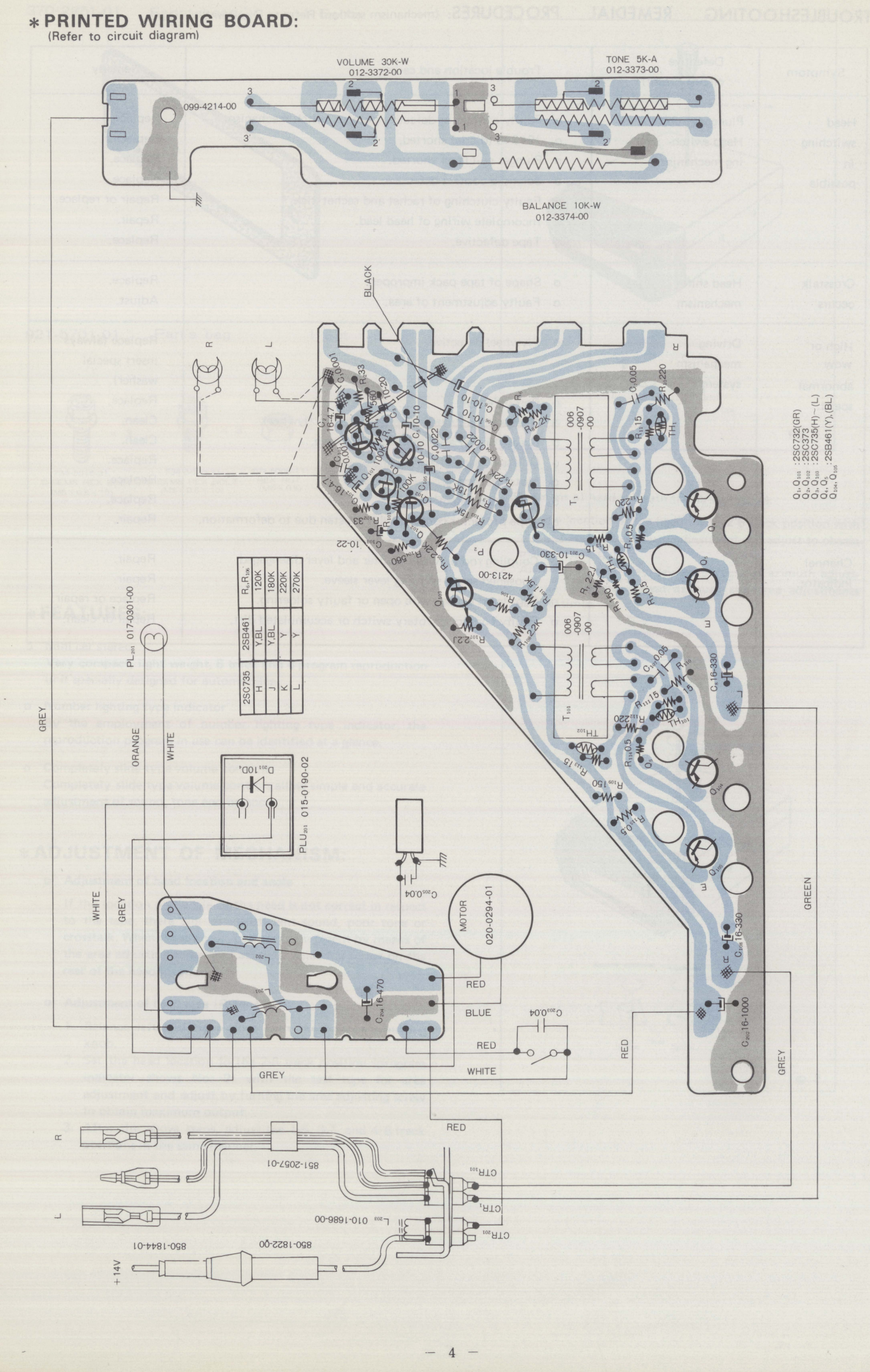

* PRINTED WIRING BOARD:
(Refer to circuit diagram)

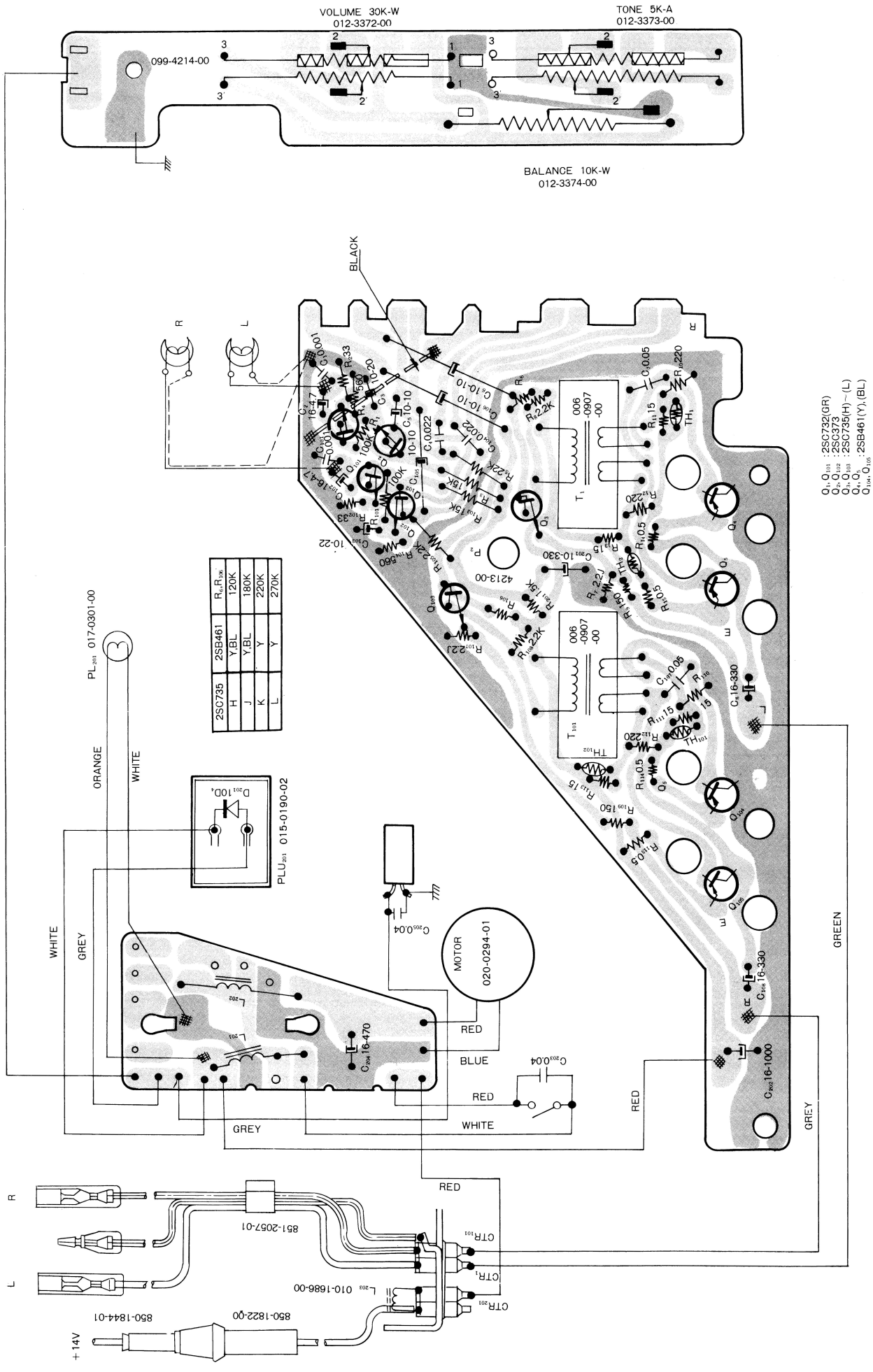

* CIRCUIT DIAGRAM:

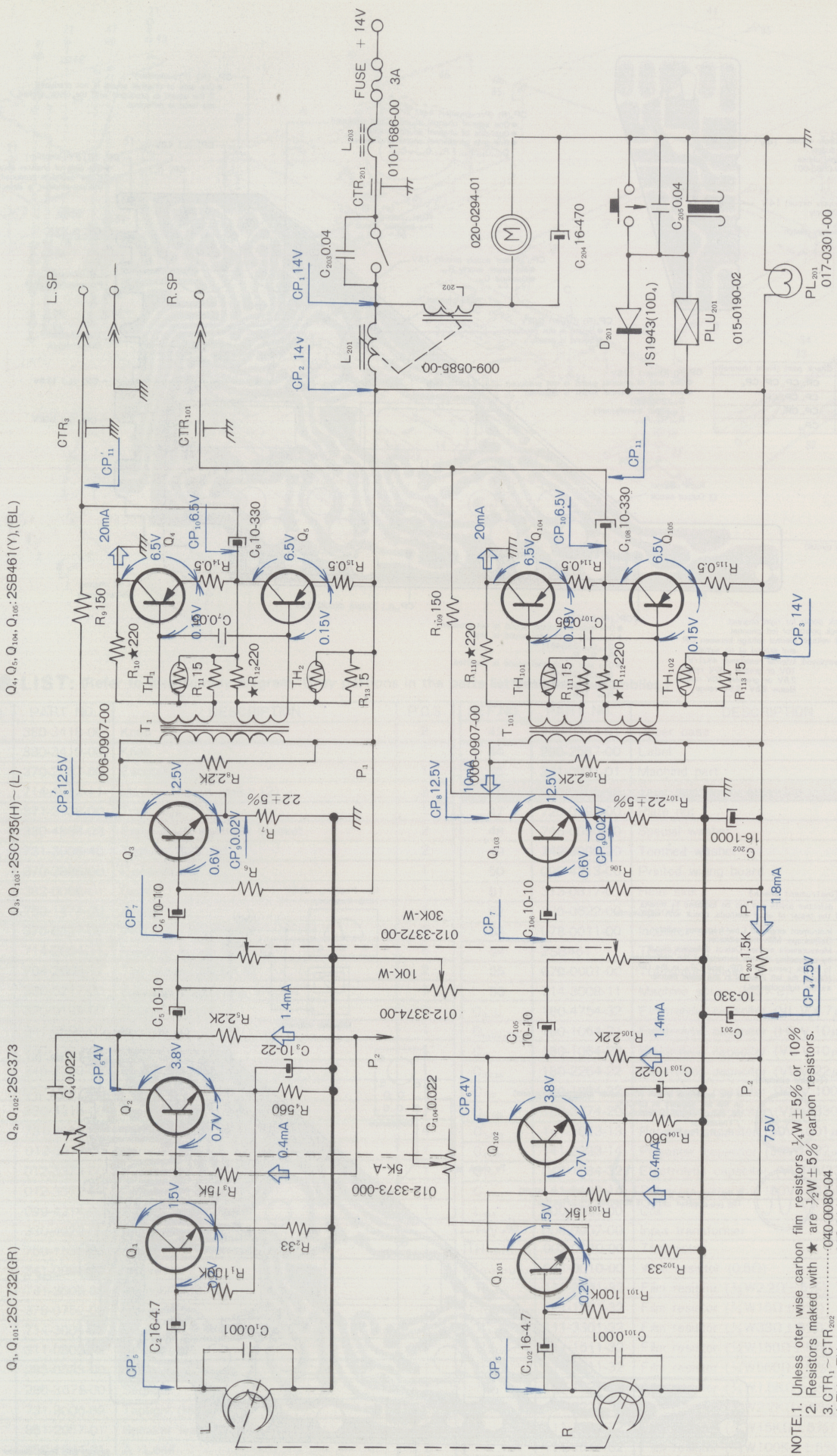

NOTE. Conduct measurements. Under no signal conditions with a tester having an internal resistance of 4KΩ/V and at the following ranges:
2.5V or greater 10V range
0.5V or greater 2.5V range
Below 0.5V 0.5V range
Measurement values may differit measured the specified range.

NOTE.1. Unless oter wise carbon film resistors ¼W±5% or 10%
2. Resistors maked with ★ are ½W±5% carbon resistors.
3. $CTR_1 \sim CTR_{202}$ ·····040-0080-04
4. $TH_1 \sim TH_{102}$ ·····002-0140-00
5.

2SC735	R_5, R_{105}
H	120K
J	180K
K	220K
L	270K

* CIRCUIT DIAGRAM:

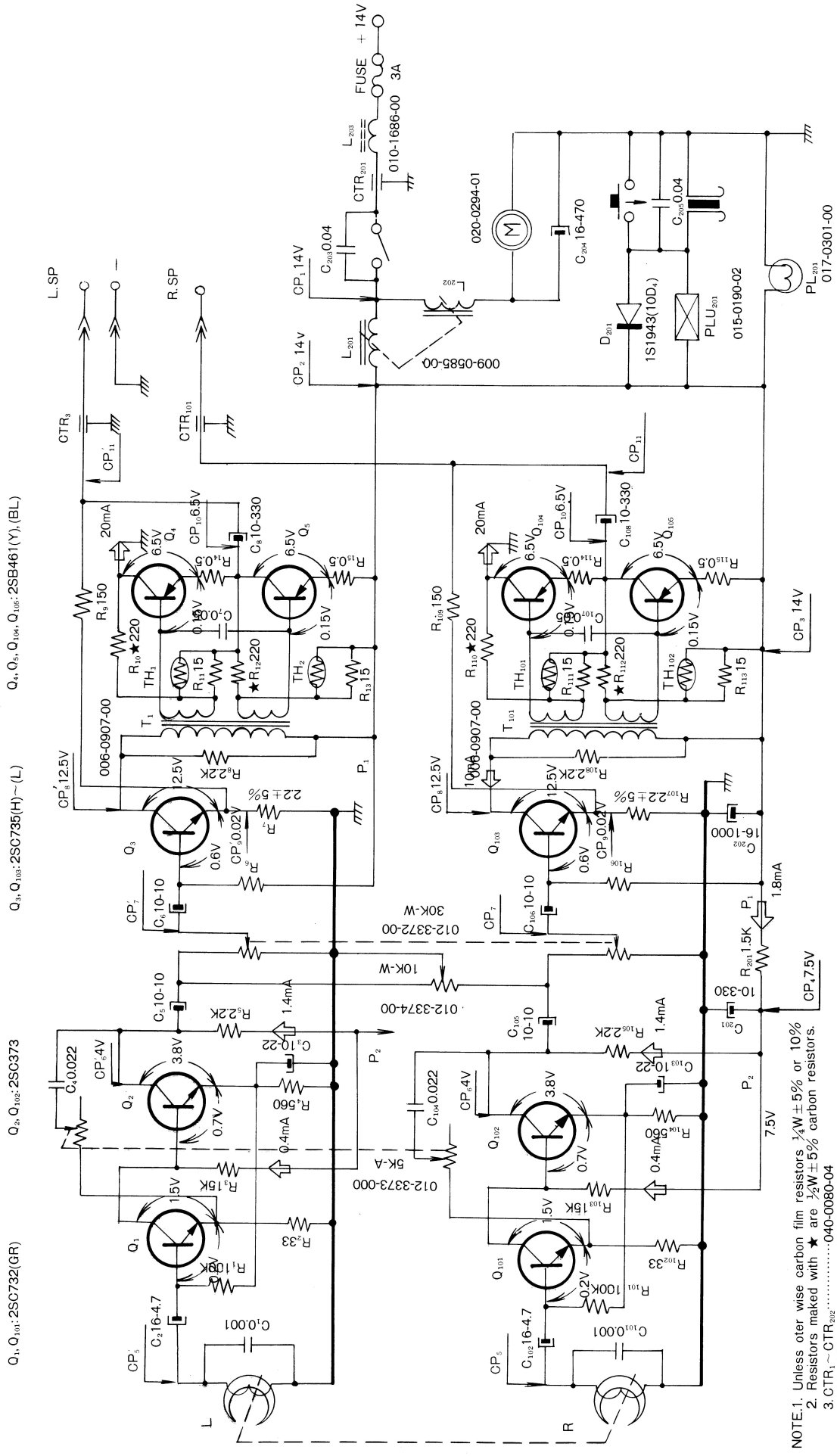

NOTE. Conduct measurements. Under no signal conditions with a tester having an internal resistance of 4KΩ/V and at the following ranges:
2.5V or greater 10V range
0.5V or greater 2.5V range
Below 0.5V 0.5V range
Measurement values may differit measured the specified range.

NOTE. 1. Unless oter wise carbon film resistors ¼W±5% or 10%
2. Resistors maked with ★ are ½W±5% carbon resistors.
3. $CTR_1 \sim CTR_{202}$ 040-0080-04
4. $TH_1 \sim TH_{102}$ 002-0140-00
5.

2SC735	R_{11}, R_{106}
H	120K
J	180K
K	220K
L	270K

* TROUBLESHOOTING: Electrical section

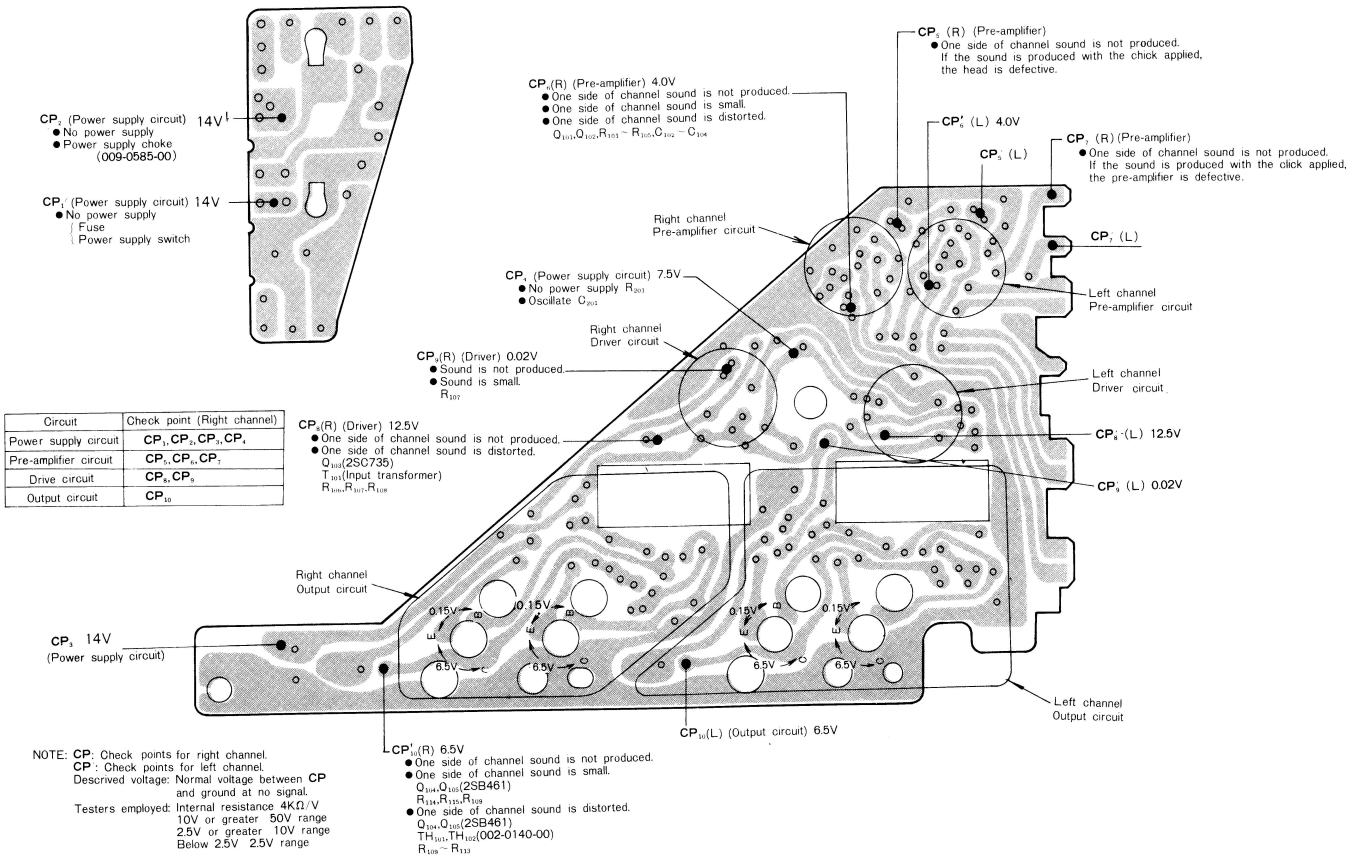

Circuit	Check point (Right channel)
Power supply circuit	CP1, CP2, CP3, CP4
Pre-amplifier circuit	CP5, CP6, CP7
Drive circuit	CP8, CP9
Output circuit	CP10

NOTE: CP: Check points for right channel.
CP': Check points for left channel.
Descrived voltage: Normal voltage between CP and ground at no signal.
Testers employed: Internal resistance 4KΩ/V
10V or greater 50V range
2.5V or greater 10V range
Below 2.5V 2.5V range

⊙ [Instrument check]

If defective points can not be localized by means of the tester of other methods, check with instruments.

1. Instrument employed Low frequency osillator. Osilloscope. Millivalve voltmater.
2. Measurement method Detect defective circuit by connecting the live terminal of the osilloscope to check points CP7 CP8 and CP10 in the CP5 (Check the left channel in the same manner as the right channel.)

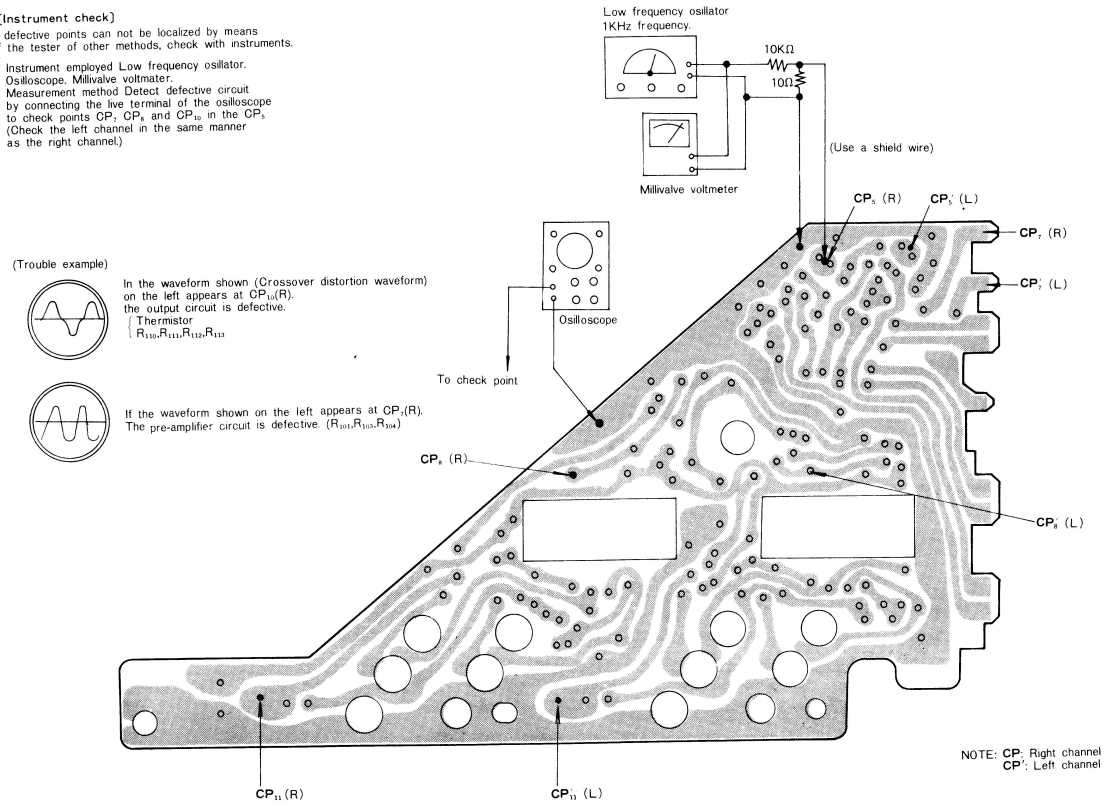

NOTE: CP: Right channel check point
CP': Left channel check point

* EXPLODED VIEW:

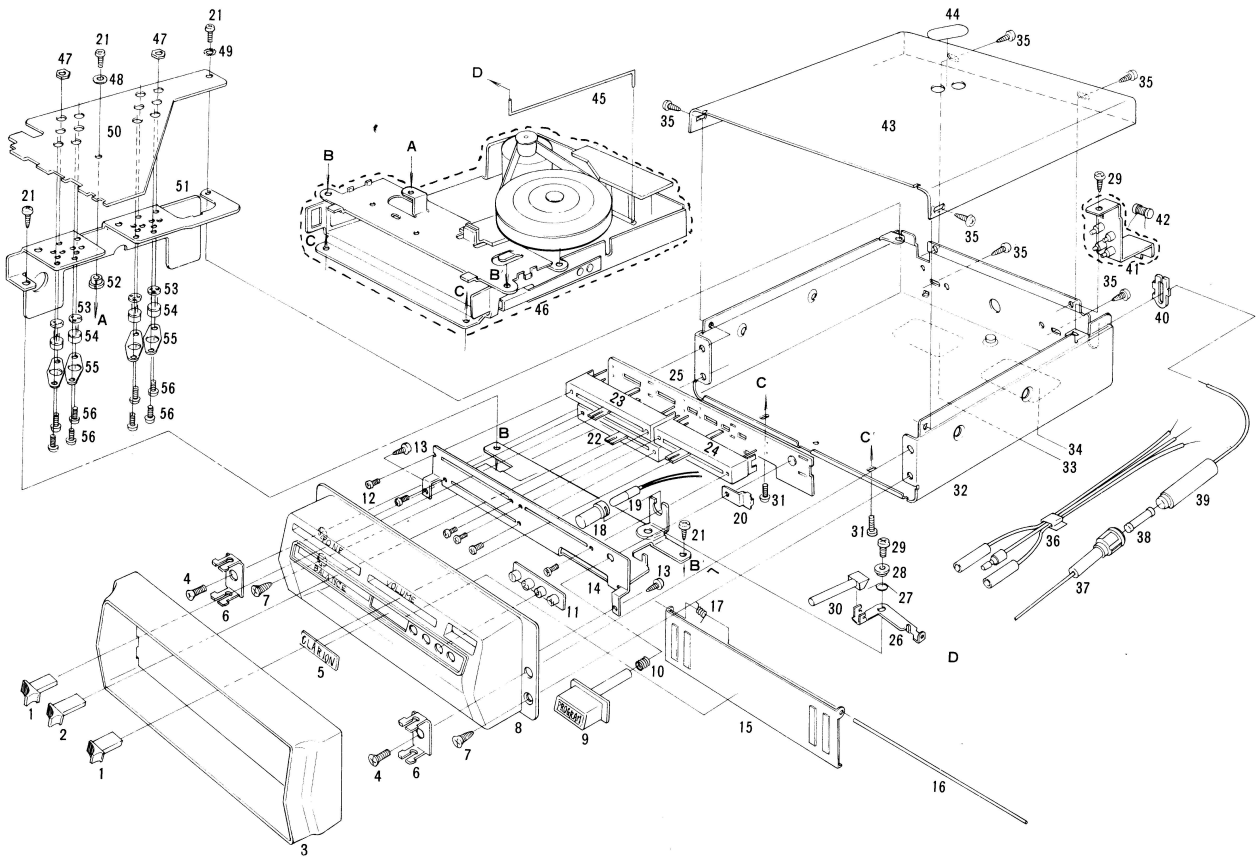

* PARTS LIST: (Refer to disassembly diagram: Grey portions in the parts list designate assemblies.)

REF.NO.	PART NO.	DESCRIPTION	P.C.S
1	380-3418-00	Knob	2
2	380-3419-00	Knob	1
3	370-2887-00	Escutcheon	1
4	714-4012-11	Machine screw (M4×12)	2
5	371-2438-00	Trim plate	1
6	330-4868-02	Escutcheon mounting bracket	2
7	731-3006-40	Taptight (M3×6)	2
8	370-2886-00	Escutcheon	1
9	382-0068-01	Button	1
10	750-1474-00	Spring	1
11	375-0527-00	Pilot lamp accessory	1
12	714-2004-11	Machine screw (M2×4)	6
13	704-2608-11	Tap screw (M2.6×8)	2
14	330-5217-00	Escucheon mounting bracket	1
15	320-0195-00	Dustproof cover	1
16	341-0590-01	Shaft	1
17	750-1399-01	Spring	1
18	345-2350-02	Pilot lamp mtg rubber	1
19	017-0301-00	Pilot lamp	1
20	330-5216-00	Program select switch	1
21	731-3010-80	Taptight (M3×10)	4
22	012-3374-00	Variable resistor	1
23	012-3373-00	Variable resistor	1
24	012-3372-00	Variable resistor	1
25	099-4214-00	Printed wiring board	1
26	330-4922-01	Dial pointer mtg plate	1
27	750-1539-00	Spring	1
28	341-0981-00	Sleeve	1
29	731-3006-80	Taptight (M3×6)	2
30	376-0759-00	Dial pointer	1
31	714-3004-89	Machine screw (M3×4)	2
32	311-0802-02	Lower case	1
33	285-0583-00	Guide label	1
34	286-3678-00	Setplate	1
35	731-3006-89	Taptight (M3×6)	6
36	851-2057-01	Speaker lead	1
37	850-1844-01	A・Lead	1
38	120-0030-00	Fuse (3A)	1
39	850-1822-00	A・Lead	1
40	335-0580-00	Cord clamp	1
41	944-0387-00	Filter assembly	1
42	010-1686-00	Coil	1

REF.NO.	PART NO.	DESCRIPTION	P.C.S
43	310-0743-01	Upper case	1
44	290-2567-00	Label	1
45	341-0921-01	Machind part	1
46	930-0405-40	Tape mechanism assembly	1
47	725-0182-00	Plate nut	2
48	746-0030-00	Special washer	1
49	742-3000-20	Toothed washer	1
50	099-4213-00	Printed wiring board	1
51	313-0817-01	Heat sink	1
52	335-0622-00	Spacer	1
53	078-0011-00	Insulater sheet	4
54	2SB461	Transistor	4
55	079-0001-00	Transistor holder	4
56	714-3008-11	Machine screw (M3×8)	8
$C_{2,102}$	180-4754-32	Electrolytic capacitor (VL V 4.7μF)	2
$C_{6,105,106}$	180-1064-21	Electrolytic capacitor (HL V 10μF)	3
C_5	180-1064-22	Electrolytic capacitor (VL V 10μF)	1
$C_{3,103}$	180-2264-22	Electrolytic capacitor (VL V 22μF)	2
C_{102}	180-1084-32	Electrolytic capacitor (VL V 1000μF)	1
$C_{8,108}$	180-3374-20	Electrolytic capacitor (VL V 330μF)	2
$C_{1,101}$	141-1023-13	Polyester capacitor (50V0.001μF)	2
$C_{4,104}$	141-2233-14	Polyester capacitor (50V0.022μF)	2
C_{102}	042-1084-32	Electrolytic capacitor (VL10V330μF)	1
$C_{7,107}$	141-5133-14	Polyester capacitor (50V0.051μF)	2
L_{203}	000-1686-00	Coil	1
$T_{1,2}$	006-0907-00	Input transformer	2
$TH_{1,2,101,102}$	002-0140-00	Thermistor	4
$R_{14,15,114,115}$	031-0010-00	Wire resistor (0.5Ω)	4
$R_{7,107}$	111-2291-32	Film resistor (¼W2.2Ω±5%)	2
$R_{11,13,111,113}$	111-1501-32	Film resistor (¼W15Ω±5%)	4
$R_{2,102}$	111-3301-32	Film resistor (¼W33Ω±5%)	2
$R_{9,109}$	111-1511-32	Film resistor (¼W150Ω±5%)	2
$R_{4,104}$	111-5611-32	Film resistor (¼W560Ω±5%)	2
R_{201}	111-1521-32	Film resistor (¼W1.5KΩ±5%)	1
$R_{5,105,8,108}$	111-2221-32	Film resistor (¼W2.2KΩ±5%)	4
$R_{3,103}$	111-1531-32	Film resistor (¼W15KΩ±5%)	2
	111-1041-32	Film resistor (¼W100KΩ±5%)	2
$Q_{3,103}$	2SC735	Transistor	2
$Q_{2,102}$	2SC373	Transistor	2
$Q_{1,101}$	2SC732GR	Transistor	2
$R_{10,12,110,220}$	110-2211-41	Solid resistor (½W220Ω±5%)	4
	111-1241-32	Film resistor (¼W120KΩ±5%)	2

* MECHANISM EXPLODED VIEW:

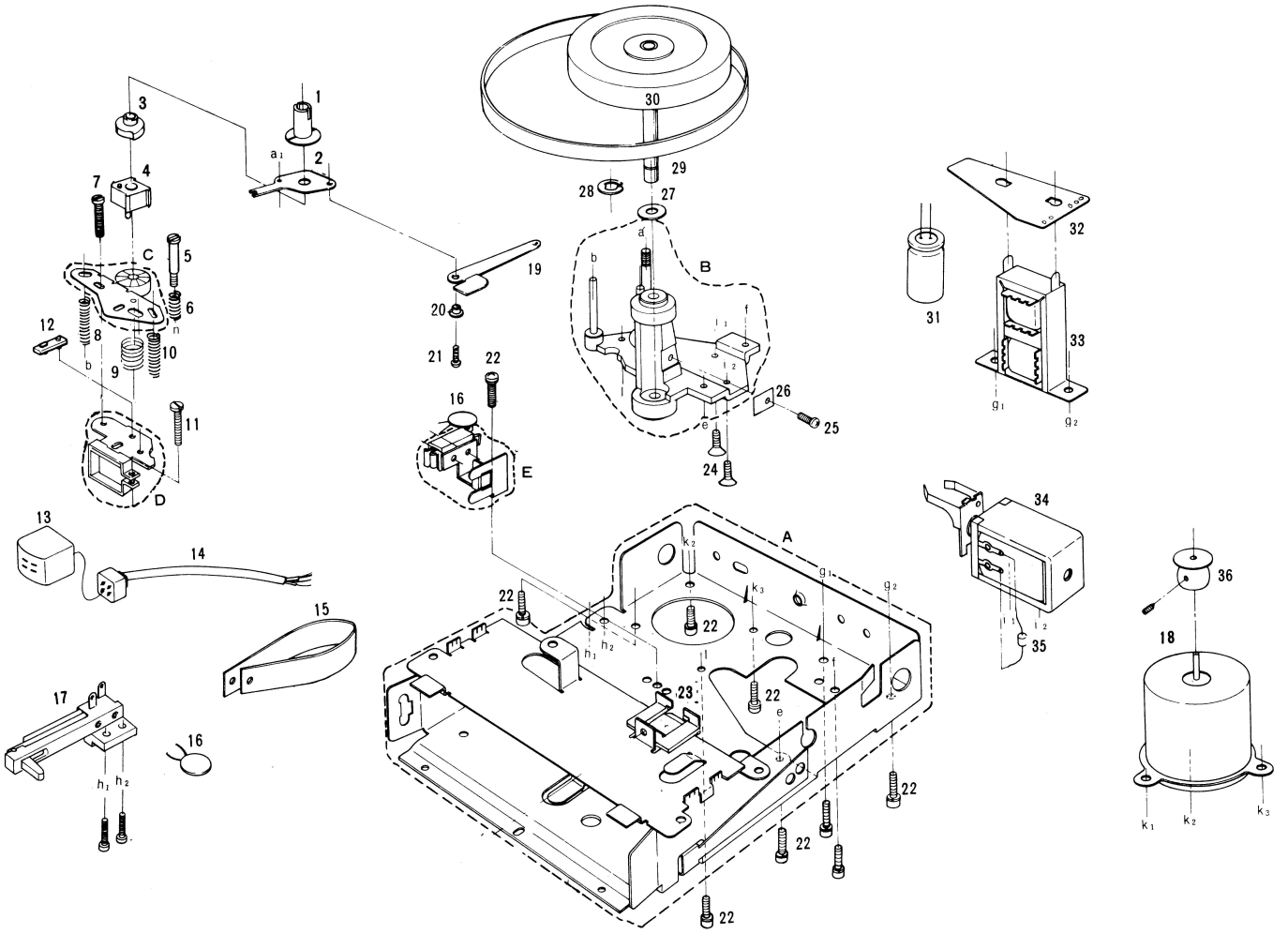

* PARTS LIST: (Refer to the mechanism exploded view)

REF.NO.	PART NO.	DESCRIPTION	P.C.S
1	631-0089-00	Area ajustment nut	1
2	630-0713-01	Rotary plate	1
3	608-0030-03	Cam	1
4	631-0075-04	Ratchet	1
5	716-0212-01	Special screw	1
6	750-1403-00	Spring	1
7	715-3010-61	Machine screw (M3×10)	1
8	750-1411-00	Spring	1
9	750-1475-00	Spring	1
10	750-1410-00	Spring	1
11	715-2608-61	Machine screw (M2.6×8)	1
12	631-0090-00	Molded part	1
13	011-0228-00	Head	1
14	852-4559-01	Extension lead	1
15	631-0076-00	Guide plate	1
16	043-0022-00	Special capacitor	1
17	013-3059-00	Switch	1
18	020-0294-01	DC Motor (M2.3×8)	1
19	630-0513-00	Lever	1
20	632-0257-00	Slide bush	1
21	714-2006-11	Machine screw (M2×6)	1
22	732-3006-11	Sems screw (M3×6)	9
23	631-0144-00	Molded part	1
24	714-3006-41	Machine screw (M3×6)	2
25	714-2606-11	Machine screw (M2.6×6)	1
26	630-0612-00	Tape protector	1
27	746-0620-00	Special washer	1
28	743-4000-00	E-ring (M4)	1
29	602-0027-00	Belt	1
30	611-0020-01	Fly wheel	1
31	042-0152-00	Special capacitor	1
32	099-4041-04	Printed wiring board	1

REF.NO.	PART NO.	DESCRIPTION	P.C.S
33	009-0585-00	Choke	1
34	015-0190-02	Plunger	1
35	001-0077-00	Diode	1
36	603-0022-00	Motor pulley	1

* MECHANISMS ASSEMBLIES PARTS LIST:

PEF.NO.	PART NO.	DESCRIPTION	P.C.S
A	960-2707-00	Deck plate assembly	1
	600-0041-01	Deck plate	1
	606-0036-01	Pack guide	1
	960-2627-00	Roller assembly	1
	728-3040-87	Rivet (M3×4)	2
B	960-2833-00	Housing assembly	1
	607-0016-02	Housing	1
	609-0027-00	Bearing	1
	609-0028-00	Bearing	1
	612-0123-00	Shaft	1
	612-0124-00	Shaft	2
C	960-2734-00	Cam assembly	1
	608-0029-02	Cam	1
	630-0548-00	Stay	1
D	960-2799-02	Head clamp assembly	1
	630-0639-00	Head holder	1
	630-0638-02	Head clamp	1
E	960-2840-00	Tape guide assembly	1
	605-0026-00	Tape guide	1
	631-0109-00	Cap	1
	631-0142-00	Molded part	1
	631-0143-00	Molded part	1
	630-0720-00	Contact	2
	728-2100-88	Rivet (2×10)	2