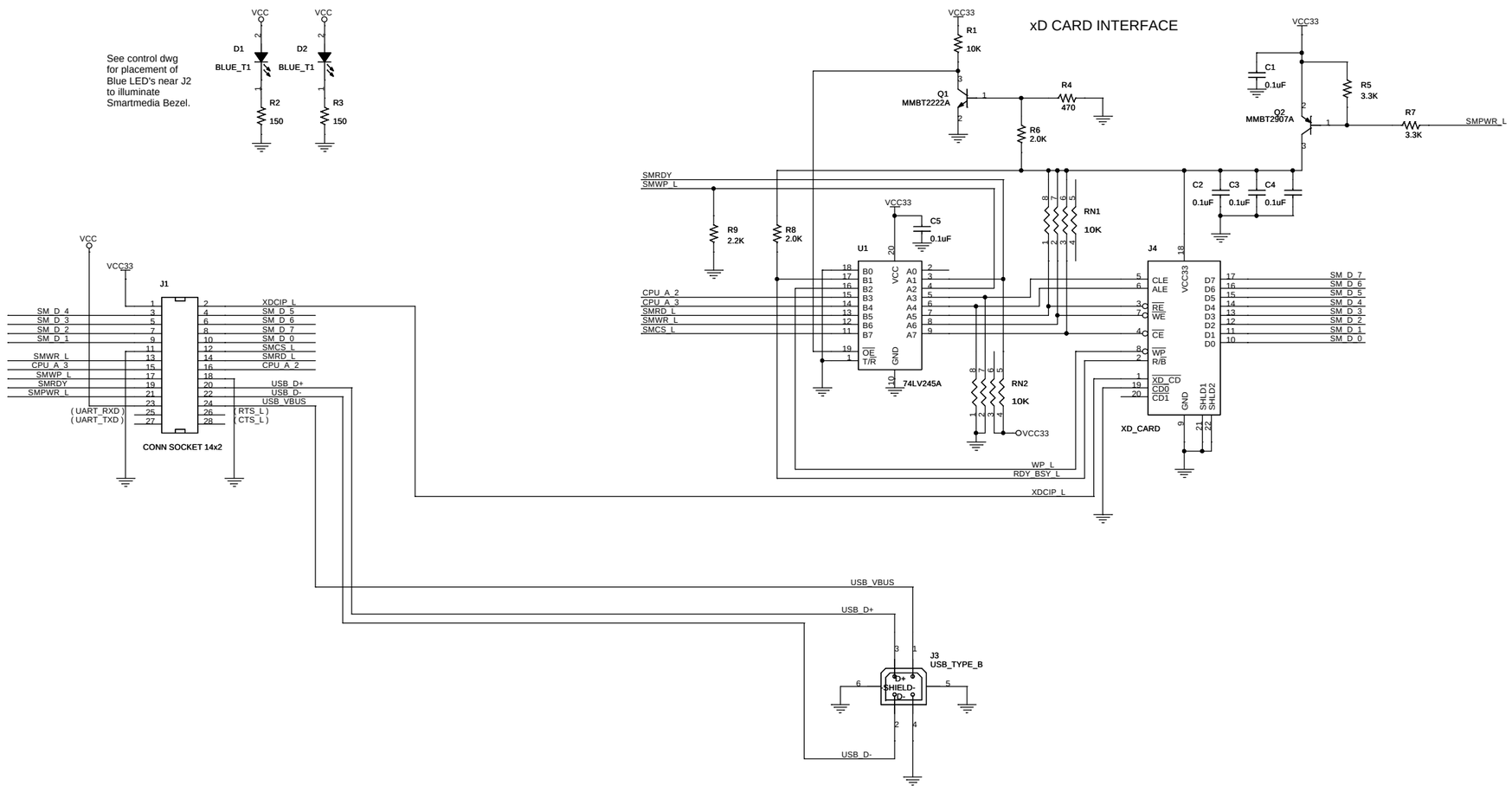

Young Chang R&D Institute

1432 Main St.
Waltham MA 02451
USA

Copyright 2007 Young Chang Co., Ltd.
Reproduction without the express written consent of Young Chang Co., Ltd. is prohibited

Title	PC3 Engine Board - USB/ xD Daughtercard		
Size 13.5" x 15.2"	By R. Folk	Document Number 021317-002	Rev R2V1
Date: Wednesday, April 25, 2007		Sheet 1 of 1	