SERVICE MANUAL

GRAPHIC EQUALIZER BOOSTER
25W+25W

(12 VOLT D.C. NEGATIVE EARTH)

MODEL PB-200F

BLACK - GROUND
ORANGE - 12V.⊕
BLUE - LEFT INPUT
RED - RIGHT INPUT
BLACK - COMMON.

ALPINE ELECTRONICS INC.

CONTENTS

1. SPECIFICATION 1
2. PARTS LOCATION 1
3. DISASSEMBLY 2
4. ADJUSTMENT 3
5. BLOCK DIAGRAM 4
6. WIRING DIAGRAM 5
7. SCHEMATIC DIAGRAM 7
8. PRINTED CIRCUIT BOARDS
   - 8-1 EQUALIZER P.C.BOARD 9
   - 8-2 BOOSTER P.C.BOARD 11
   - 8-3 L.E.D. P.C.BOARD (A) 13
   - 8-4 L.E.D. P.C.BOARD (B) 13
   - 8-5 FADER P.C.BOARD 13
9. SEMICONDUCTOR LEAD IDENTIFICATION 14
10. EXPLODED VIEW 15
11. PARTS LIST 16
12. PACKING METHOD 19

1. SPECIFICATIONS

Power Source	DC 14.0V (11 ~ 16V allowable)
Grounding System	Negative Type
Max. Current Consumption	6A (output 20W 2ch.)
Dimensions (W x H x D)	150 x 65 x 175mm (5-7/8 x 2.5 x 7in.)
Weight	1.3kg
Power Output	15W (at 1kHz, THD 10%)/ch.
Graphic range	
Equalization range	±12dB (output 5W)
Equalization Frequency	60Hz, 250Hz, 1kHz, 3.5kHz, 10kHz.
Frequency Response	35Hz ~ 20kHz (–3dB, output 1W)
Noise	0.9μV (input short)
Input Level	2V/27Ω
Load Impedance	4Ω

NOTE:
Specifications and the design subject to possible modification without notice due to improvements.

2. PARTS LOCATION

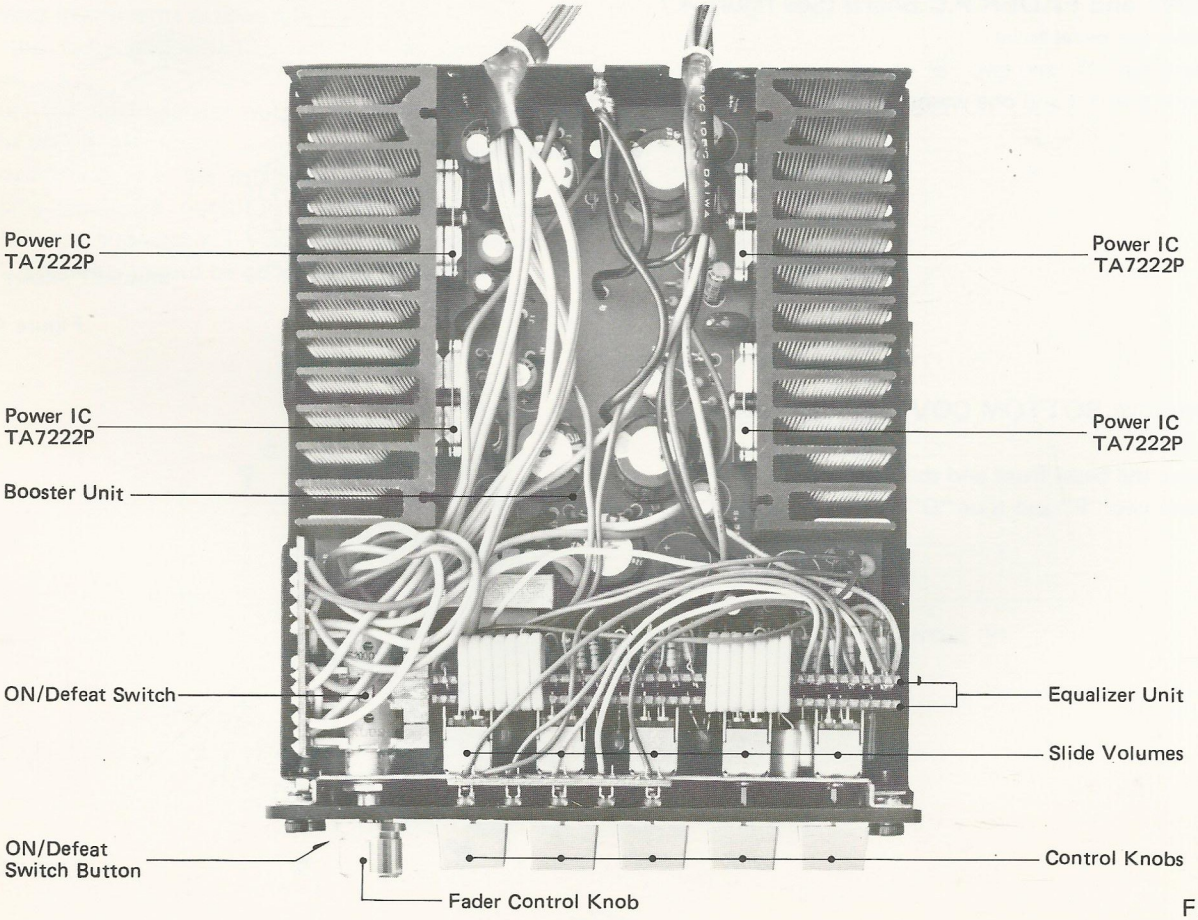

Figure 1

3. DISASSEMBLY

- **To remove TOP COVER (See figure 2.)**

1. Remove four "A" and two "B" screws.
2. Slide off the top cover to the back.

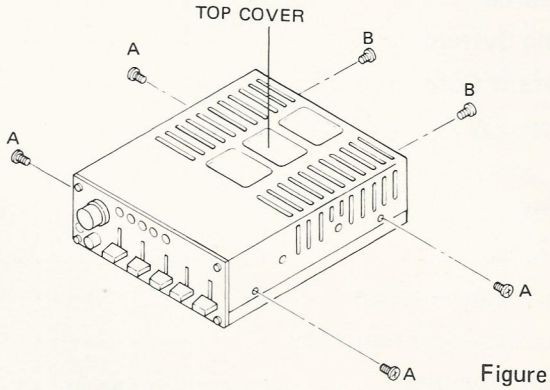

Figure 2

- **To remove BEZEL FRONT (See figure 3.)**

1. Pull off all the slide volume knobs and fader knob.
2. Remove four "C" screws.
3. Now, the bezel front will be detached by moving it toward you.

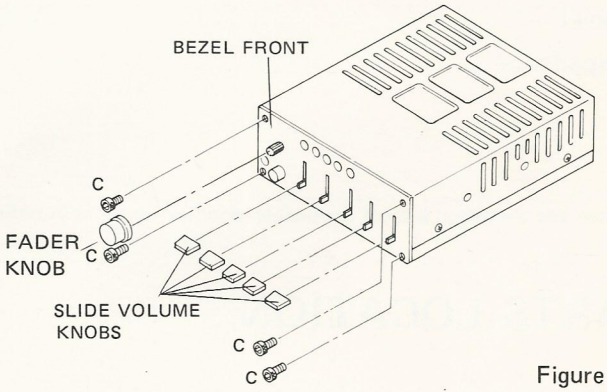

Figure 3

- **To remove LED P.C.Boards and BRACKET FRONT and FADER P.C.Board (See figure 4.)**

1. Remove the bezel front.
2. Remove ten "D" and two "E" screws.
3. Remove one nut and one washer.

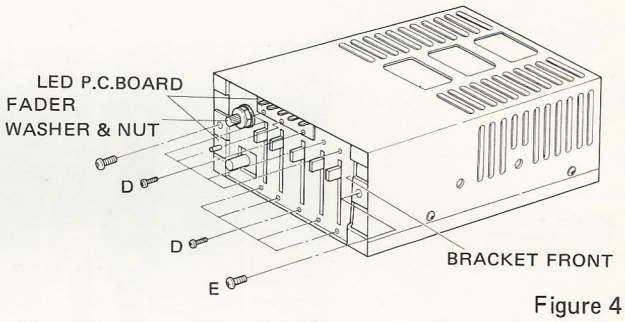

Figure 4

- **To remove BOTTOM COVER (See figure 4 and 5.)**

1. Remove the bezel front and the top cover.
2. Remove two "F" and four "G" screws.

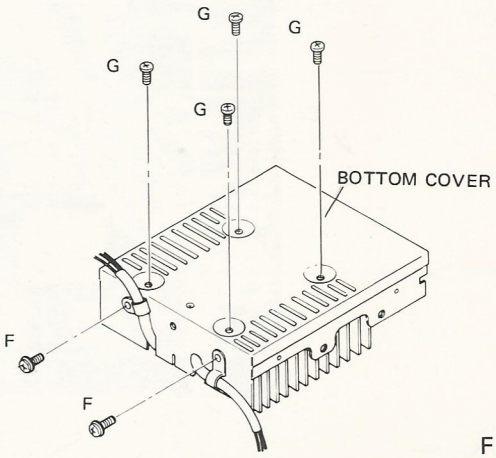

Figure 5

4. ADJUSTMENT

- **Connection Diagram**

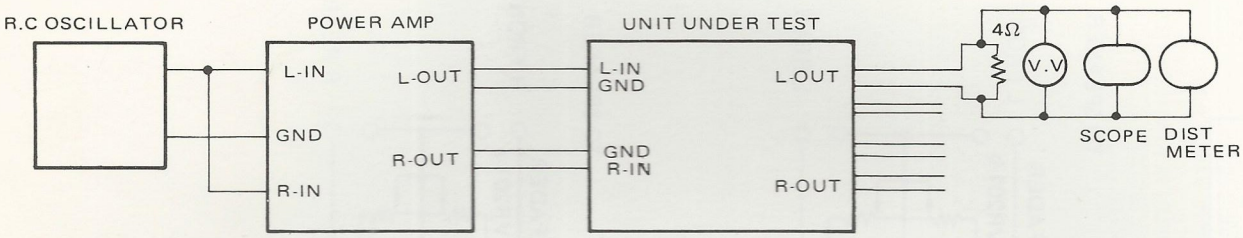

Figure 6

- **Control Settings**

Equializer Controls ..... Center position (Flat)
Fader Control ..... Rear side

- **Procedure**

PB-200F has not any other adjustable part than equalizer controls. So, only the measurement of input vs output characteristic will be required after one or more of the power ICs are replaced.
Figure 7 shows the typical characteristic curve.

1. Connect instruments as shown in figure 6.
2. Set the fader and equalizer controls as described above.
3. Adjust the test oscillator output for 0.02 volt inputs to the unit under testing.
4. Gradually increase the oscillator output until non-clipping maximum output is obtained watching the oscilloscope and read V.T.V.M. to measure the output level. The value should be no less than 10 volts.

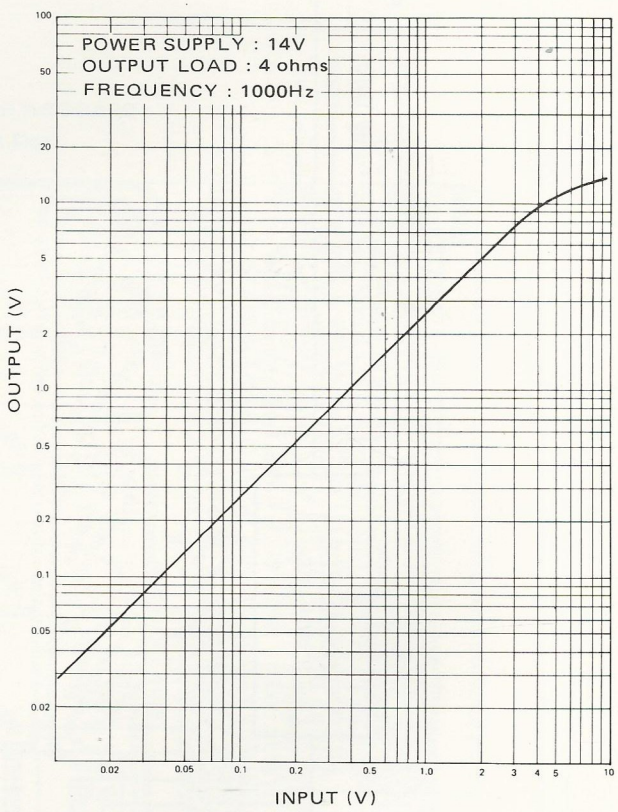

Figure 7

5. BLOCK DIAGRAM

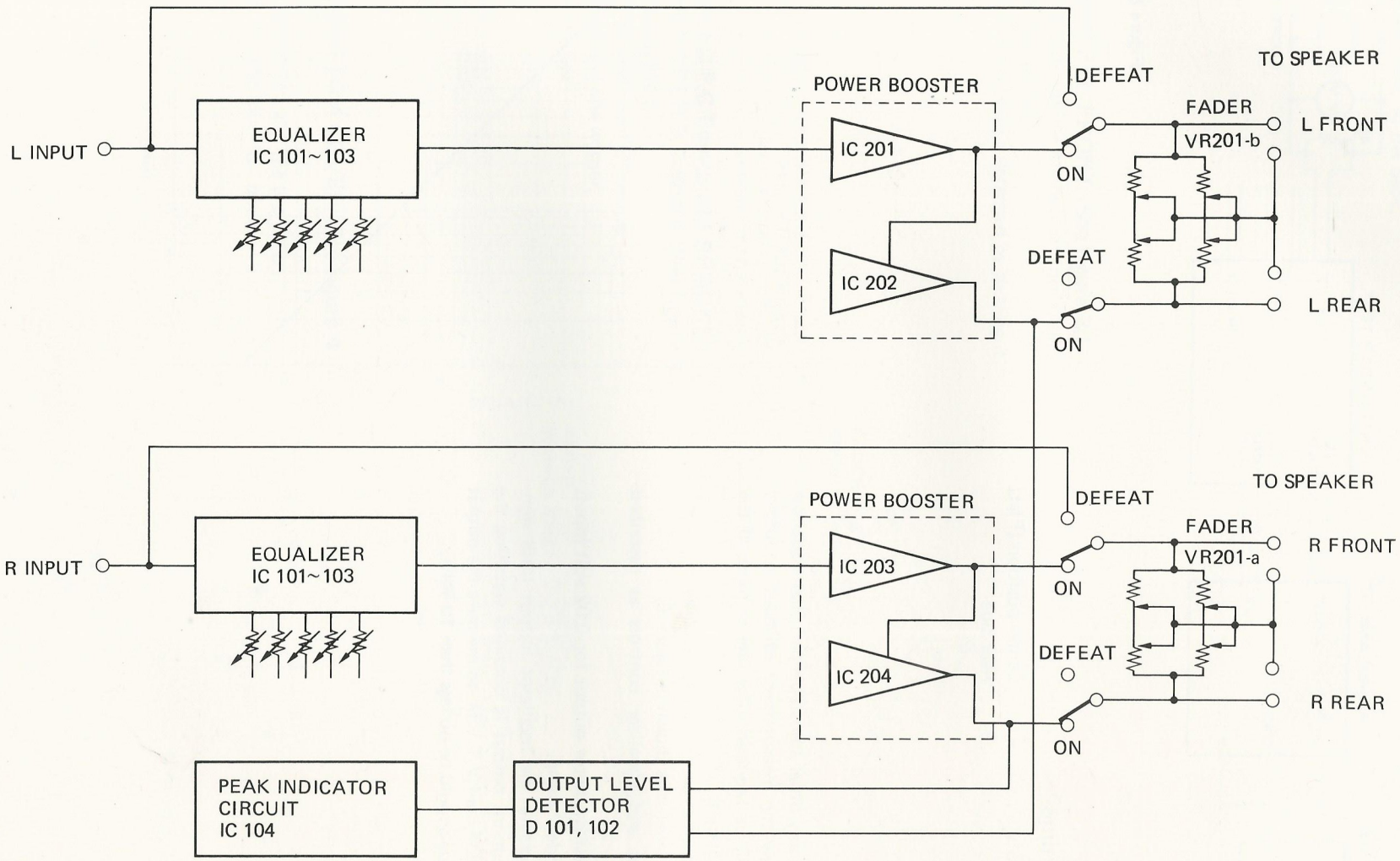

Figure 8

6. WIRING DIAGRAM

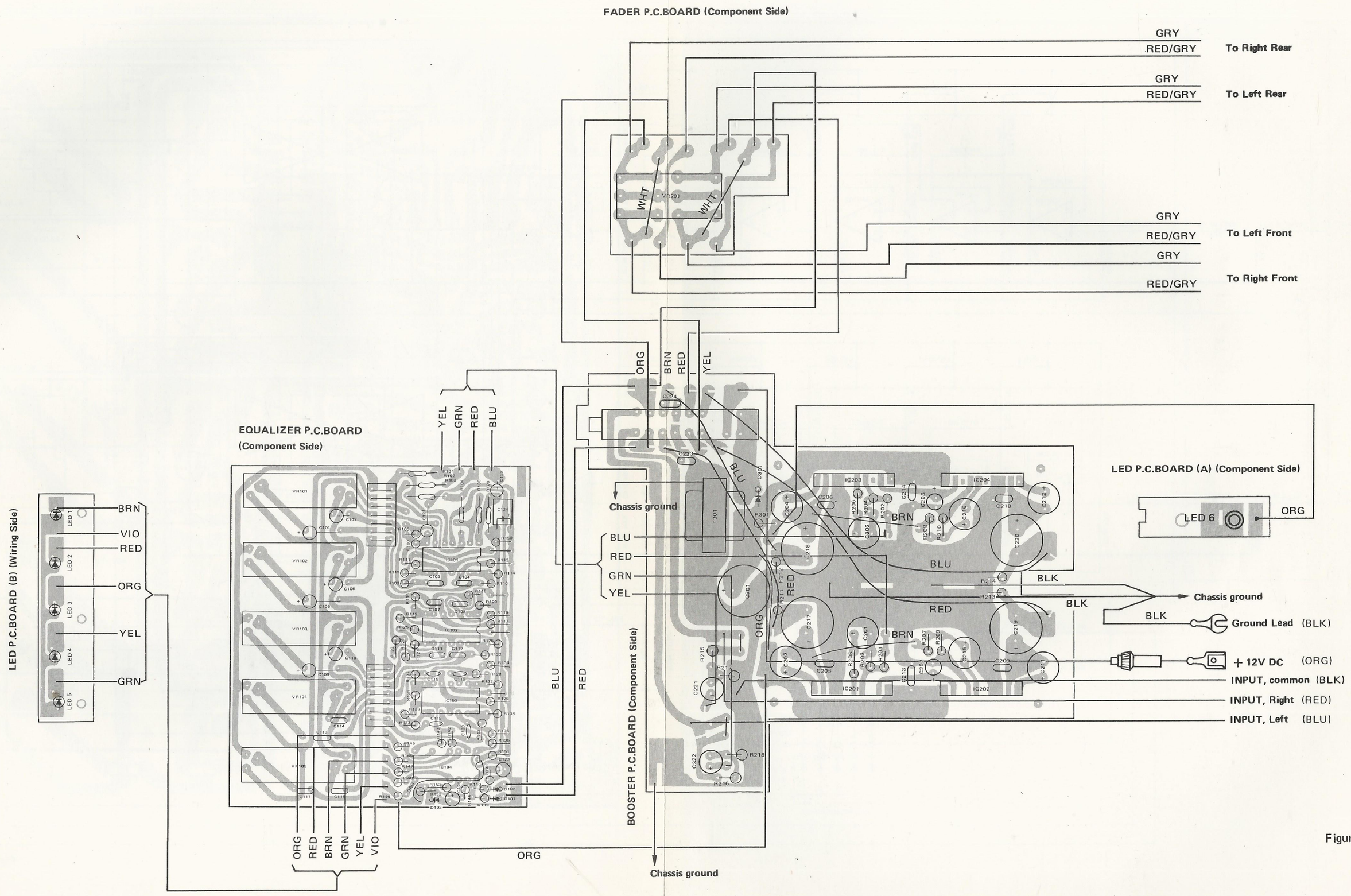

Figure 9

7. SCHEMATIC DIAGRAM

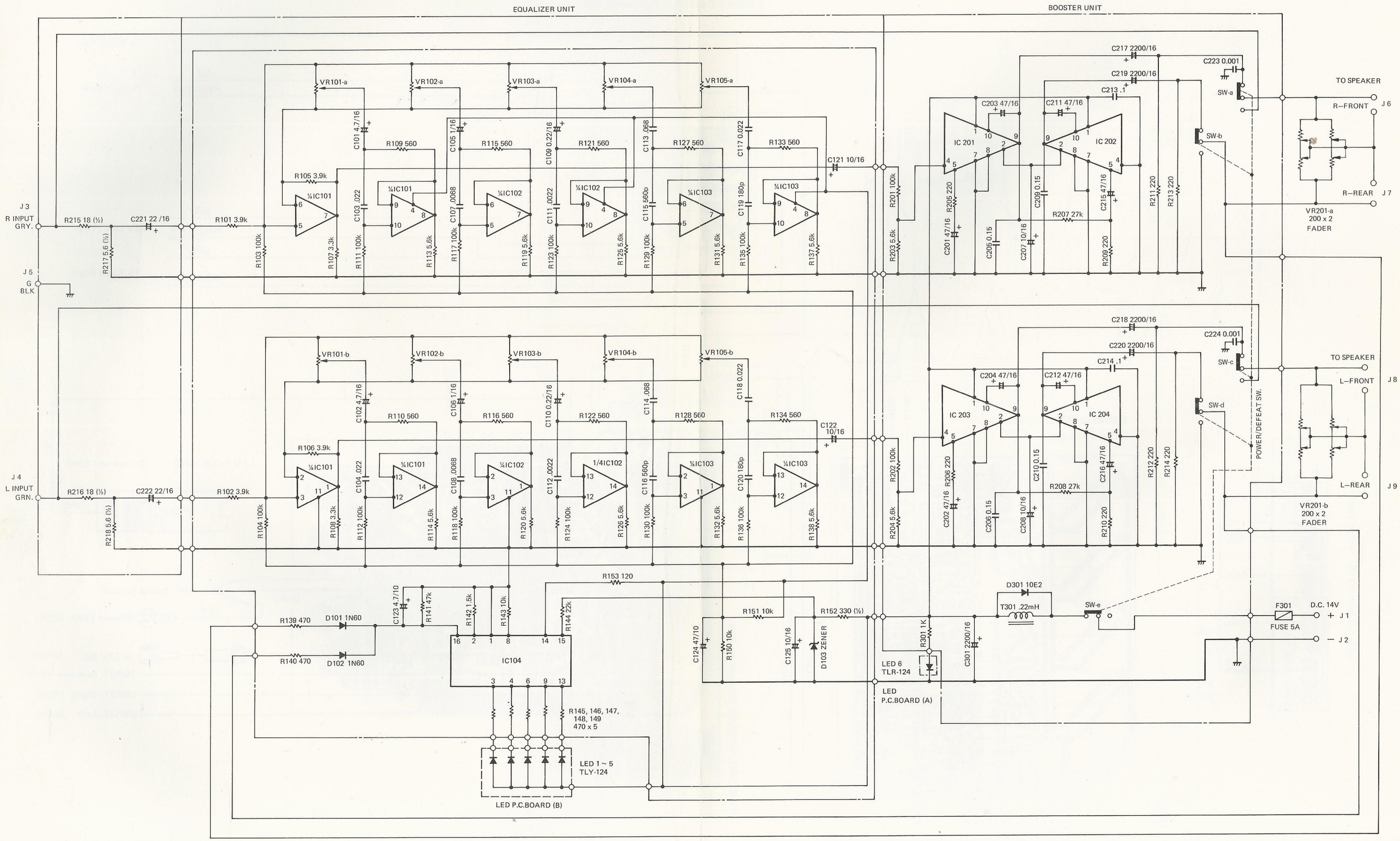

Figure 10

8. PRINTED CIRCUIT BOARDS

8-1 EQUALIZER P.C.BOARD

- Top View

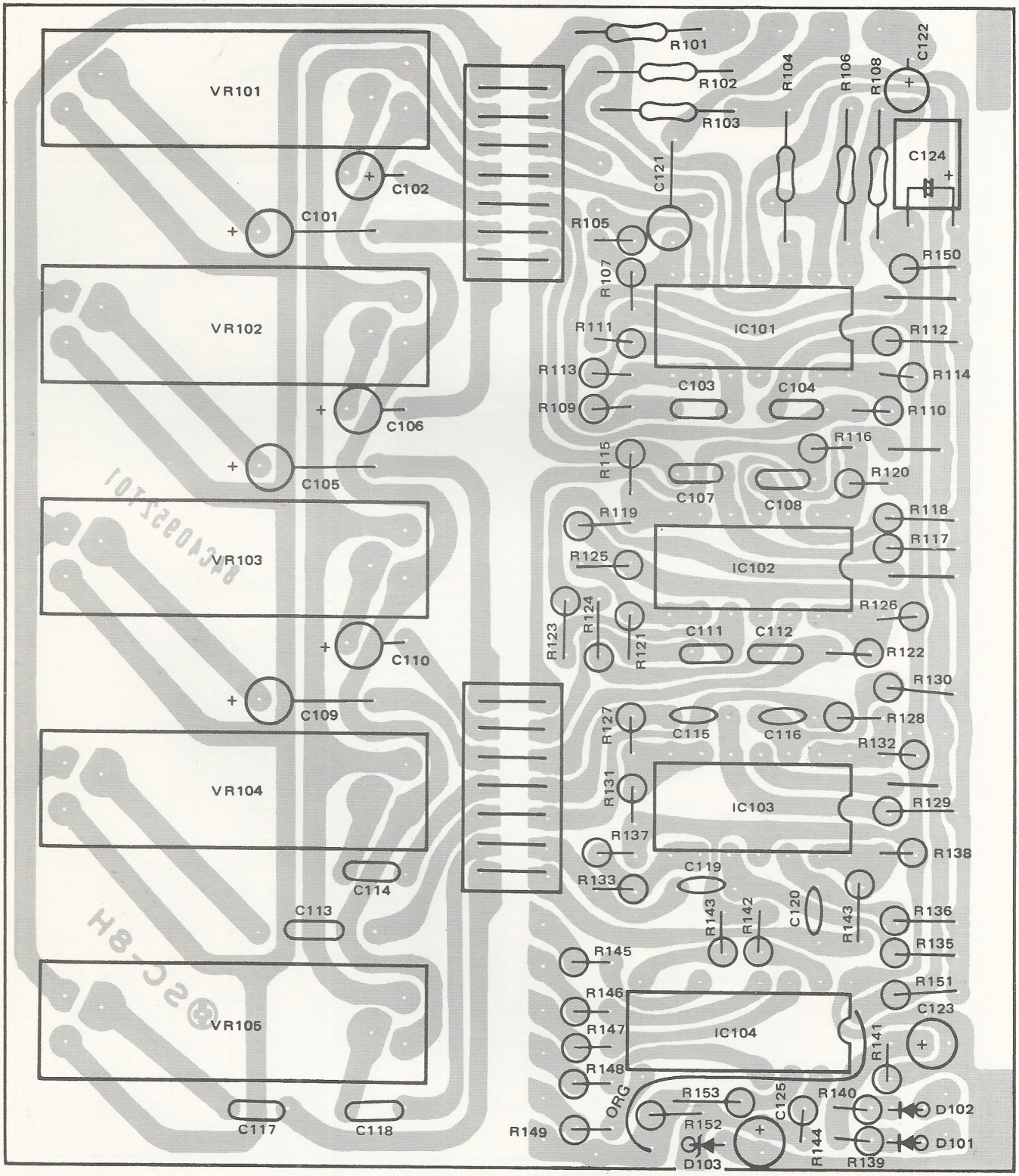

Figure 11

- Bottom View

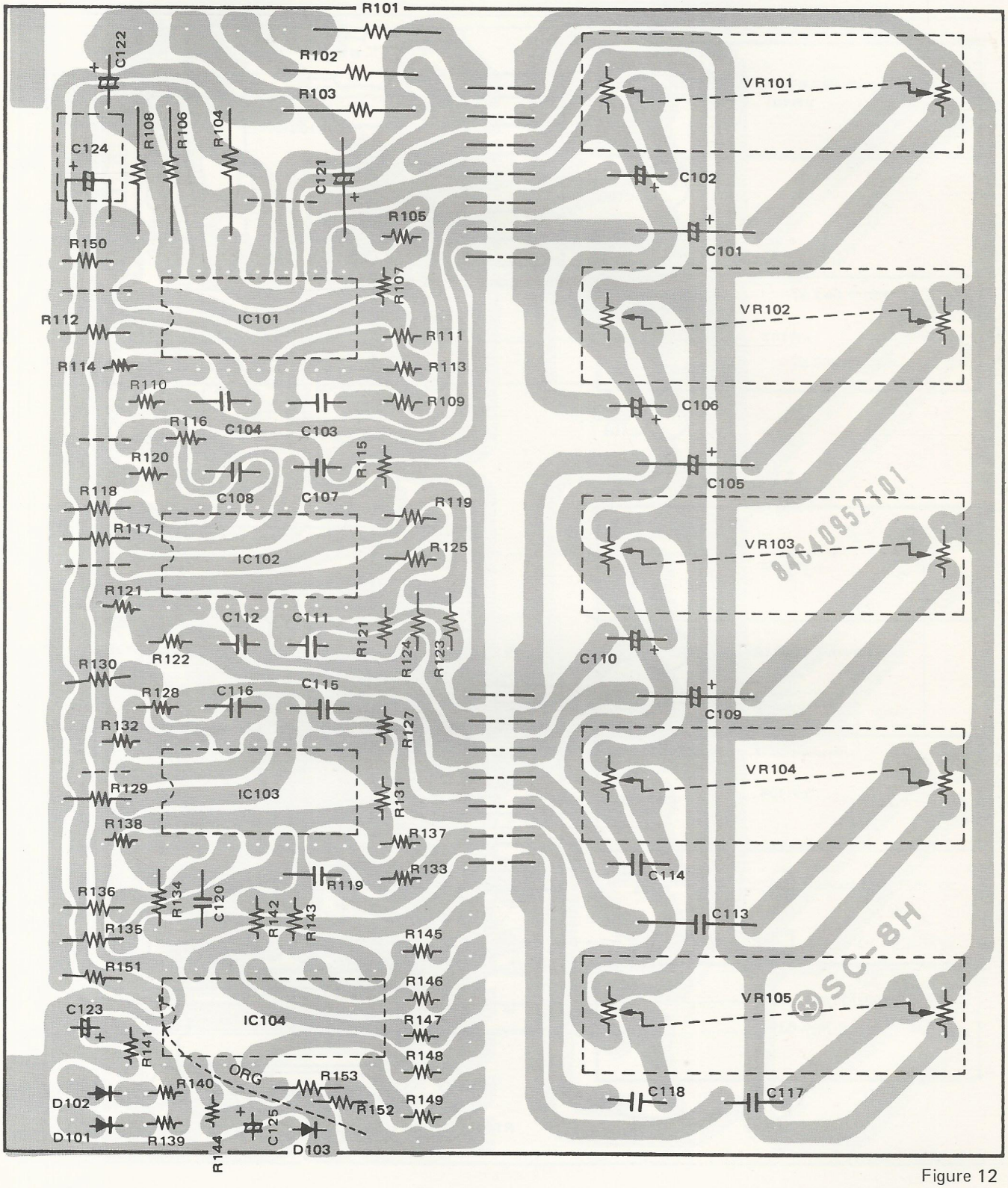

Figure 12

8-2 BOOSTER P.C.BOARD

- Top View

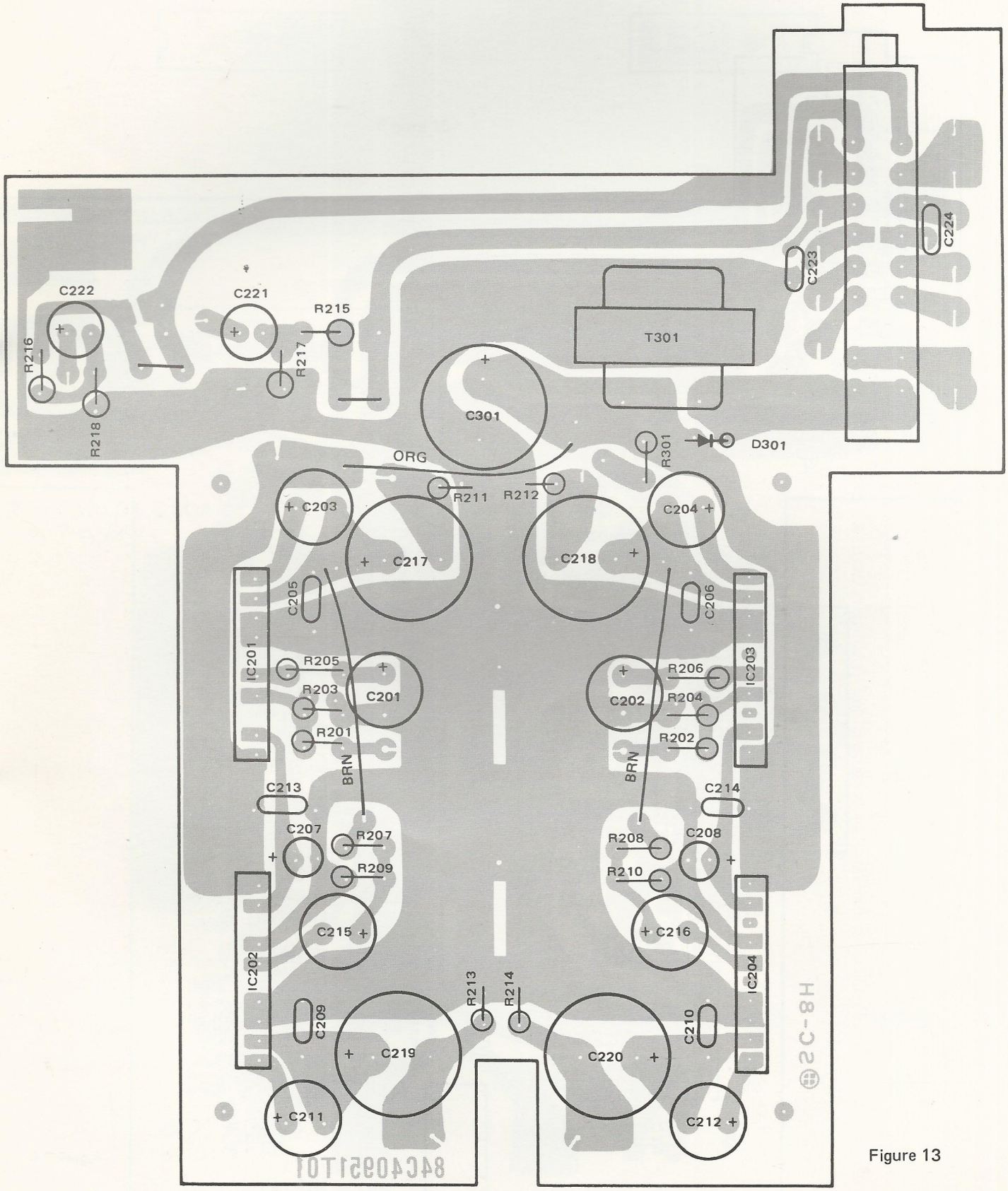

Figure 13

- Bottom View

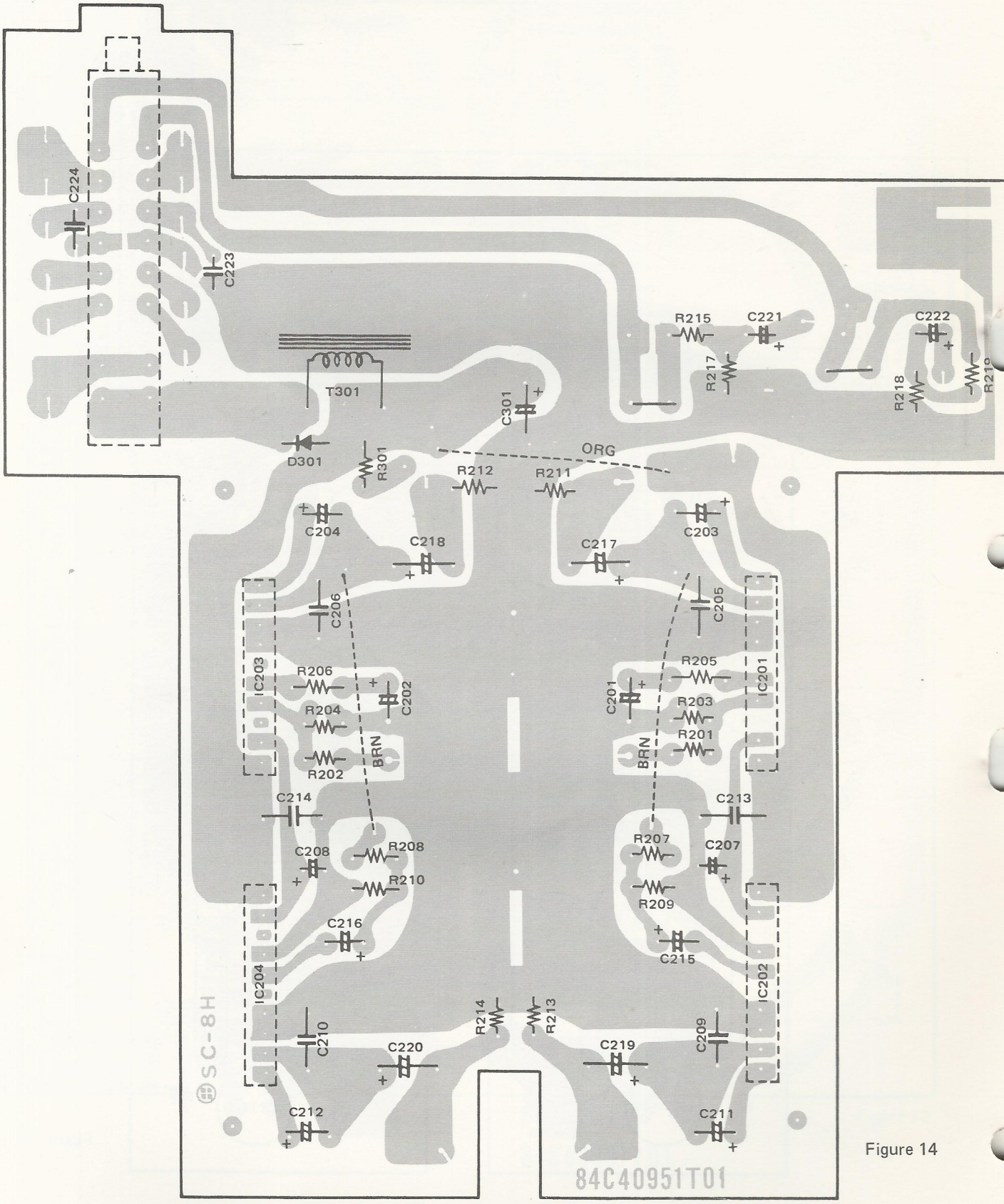

Figure 14

8-3 L.E.D. P.C.BOARD (A)

- Top View

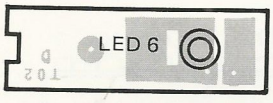

Figure 15

- Bottom View

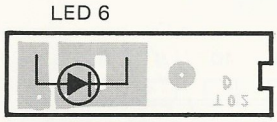

Figure 16

8-4 L.E.D. P.C.BOARD (B)

- Top View

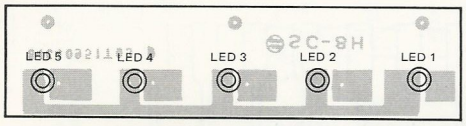

Figure 17

- Bottom View

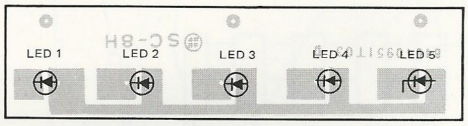

Figure 18

8-5 FADER P.C.BOARD

- Top View

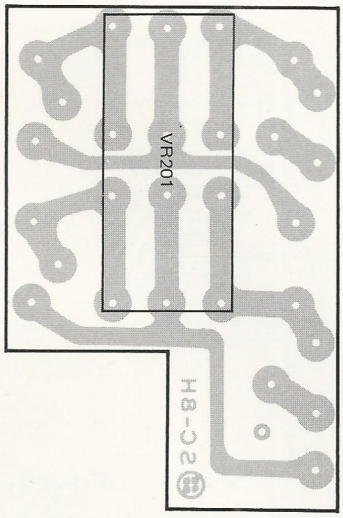

Figure 19

- Bottom View

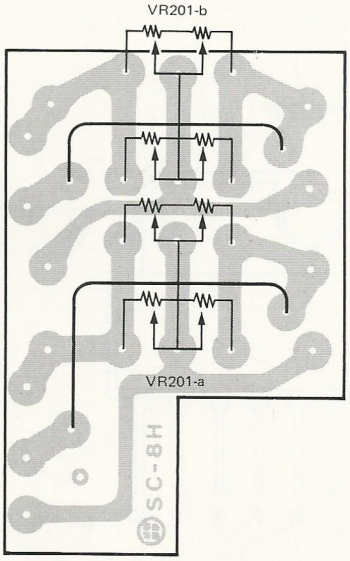

Figure 20

9. SEMICONDUCTOR LEAD IDENTIFICATION

TA75902P

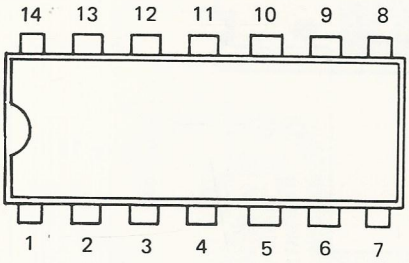

TA7612P

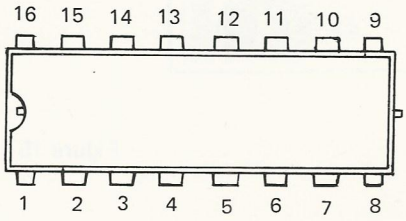

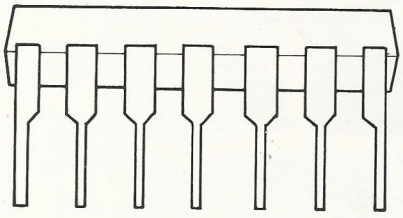

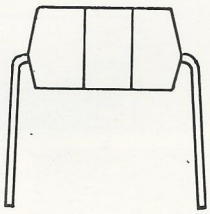

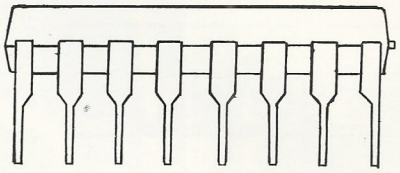

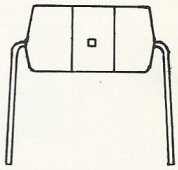

TA7222P

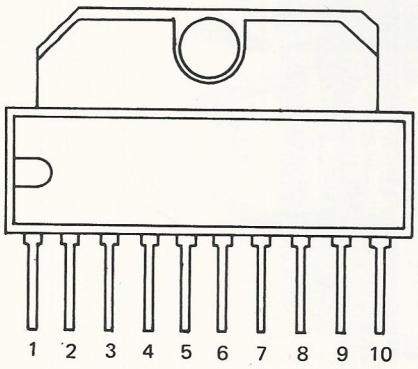

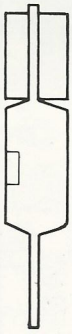

Figure 21

10. EXPLODED VIEW

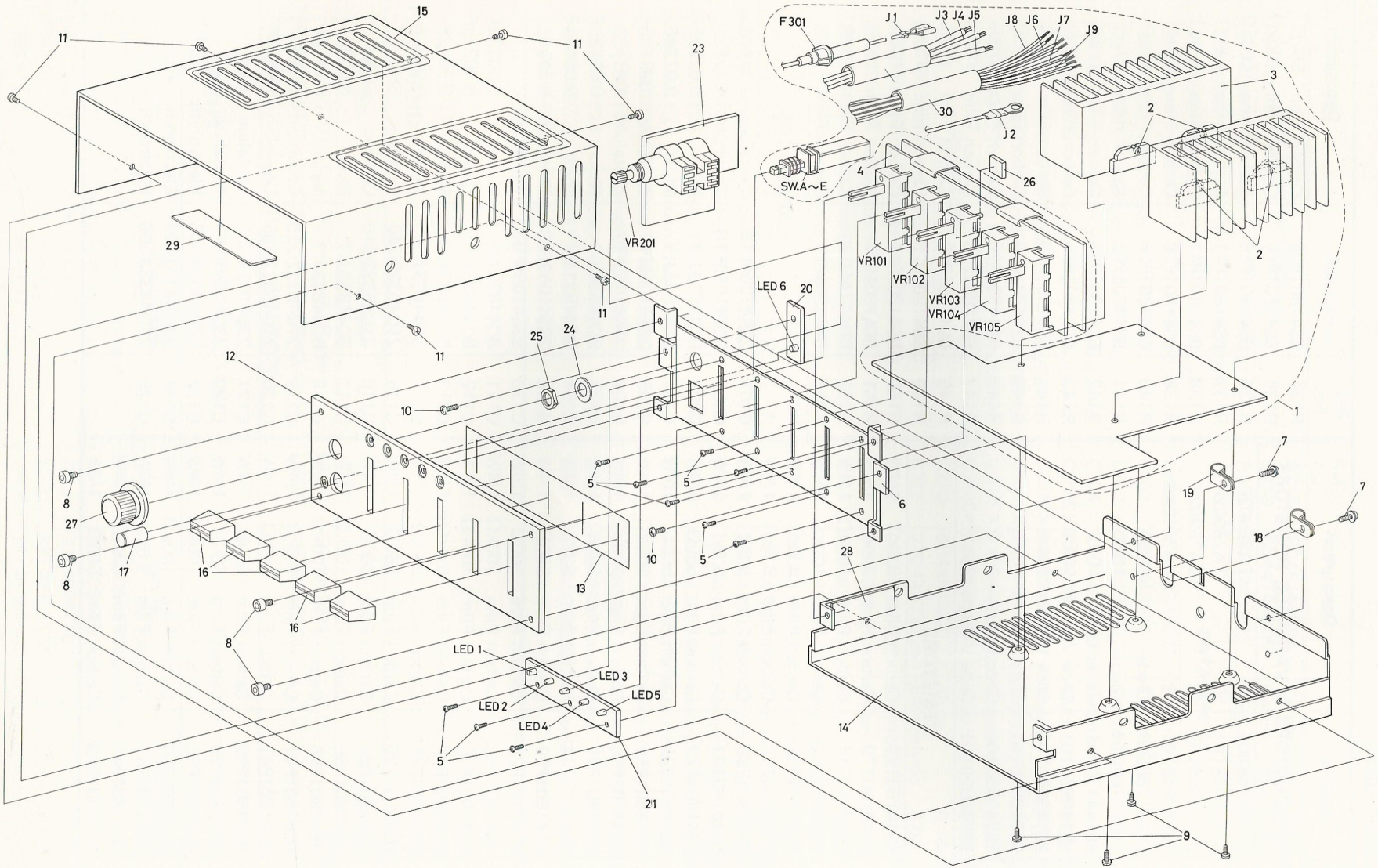

Figure 22

11. PARTS LIST

EQUALIZER UNIT

Ref. No.	Part No.	Description		
SEMICONDUCTORS & VARIABLE RESISTORS				
IC101	51T40948T01	IC	TA75902P	
IC102	51T40948T01	IC	TA75902P	
IC103	51T40948T01	IC	TA75902P	
IC104	51T40949T01	IC	TA7612AP	
D101	48B41768G01	Diode	1N60	
D102	48B41768G01	Diode	1N60	
D103	48T44170P01	Zener Diode	10V	
VR101	18T40950T01	Slide Volume	20k-BX2	
VR102	18T40950T01	Slide Volume	20k-BX2	
VR103	18T40950T01	Slide Volume	20k-BX2	
VR104	18T40950T01	Slide Volume	20k-BX2	
VR105	18T40950T01	Slide Volume	20k-BX2	
RESISTORS				
R101	6S40150T79	Carbon Film	3.9kΩ	1/4W
R102	6S40150T79	Carbon Film	3.9kΩ	1/4W
R103	6S40151T14	Carbon Film	100kΩ	1/4W
R104	6S40151T14	Carbon Film	100kΩ	1/4W
R105	6S41801P39	Carbon Film	3.9kΩ	1/4W
R106	6S40150T79	Carbon Film	3.9kΩ	1/4W
R107	6S41801P38	Carbon Film	3.3kΩ	1/4W
R108	6S40150T77	Carbon Film	3.3kΩ	1/4W
R109	6S41801P29	Carbon Film	560Ω	1/4W
R110	6S41801P29	Carbon Film	560Ω	1/4W
R111	6S41801P56	Carbon Film	100kΩ	1/4W
R112	6S41801P56	Carbon Film	100kΩ	1/4W
R113	6S41801P41	Carbon Film	5.6kΩ	1/4W
R114	6S41801P41	Carbon Film	5.6kΩ	1/4W
R115	6S41801P29	Carbon Film	560Ω	1/4W
R116	6S41801P29	Carbon Film	560Ω	1/4W
R117	6S41801P56	Carbon Film	100kΩ	1/4W
R118	6S41801P56	Carbon Film	100kΩ	1/4W
R119	6S41801P41	Carbon Film	5.6kΩ	1/4W
R120	6S41801P41	Carbon Film	5.6kΩ	1/4W
R121	6S41801P29	Carbon Film	560Ω	1/4W
R122	6S41801P29	Carbon Film	560Ω	1/4W
R123	6S41801P56	Carbon Film	100kΩ	1/4W
R124	6S41801P56	Carbon Film	100kΩ	1/4W
R125	6S41801P41	Carbon Film	5.6kΩ	1/4W
R126	6S41801P41	Carbon Film	5.6kΩ	1/4W
R127	6S41801P29	Carbon Film	560Ω	1/4W
R128	6S41801P29	Carbon Film	560Ω	1/4W
R129	6S41801P56	Carbon Film	100kΩ	1/4W
R130	6S41801P56	Carbon Film	100kΩ	1/4W
R131	6S41801P41	Carbon Film	5.6kΩ	1/4W
R132	6S41801P41	Carbon Film	5.6kΩ	1/4W
R133	6S41801P29	Carbon Film	560Ω	1/4W
R134	6S41801P29	Carbon Film	560Ω	1/4W
R135	6S41801P56	Carbon Film	100kΩ	1/4W
R136	6S41801P56	Carbon Film	100kΩ	1/4W
R137	6S41801P41	Carbon Film	5.6kΩ	1/4W
R138	6S41801P41	Carbon Film	5.6kΩ	1/4W
R139	6S41801P28	Carbon Film	470Ω	1/4W
R140	6S41801P28	Carbon Film	470Ω	1/4W
R141	6S41801P52	Carbon Film	47kΩ	1/4W
R142	6S41801P34	Carbon Film	1.5kΩ	1/4W
R143	6S41801P44	Carbon Film	10kΩ	1/4W
R144	6S41801P48	Carbon Film	22kΩ	1/4W
R145	6S41801P28	Carbon Film	470Ω	1/4W
R146	6S41801P28	Carbon Film	470Ω	1/4W
R147	6S41801P28	Carbon Film	470Ω	1/4W
R148	6S41801P28	Carbon Film	470Ω	1/4W
R149	6S41801P28	Carbon Film	470Ω	1/4W
R150	6S41801P44	Carbon Film	10kΩ	1/4W
R151	6S41801P44	Carbon Film	10kΩ	1/4W
R152	6D44744G26	Carbon Film	330Ω	1/2W
R153	6S41801P21	Carbon Film	120Ω	1/4W
CAPACITORS				
C101	23S41059P18	Tantalum	4.7μF	16V
C102	23S41059P18	Tantalum	4.7μF	16V
C103	8C44833J17	Mylar	0.022μF	50V
C104	8C44833J17	Mylar	0.022μF	50V
C105	23S41059P07	Tantalum	1μF	16V
C106	23S41059P07	Tantalum	1μF	16V
C107	8C44833J11	Mylar	0.0068μF	50V
C108	8C44833J11	Mylar	0.0068μF	50V
C109	23S41059P03	Tantalum	0.22μF	16V
C110	23S41059P03	Tantalum	0.22μF	16V
C111	8C44833J05	Mylar	0.0022μF	50V
C112	8C44833J05	Mylar	0.0022μF	50V
C113	8C44833J23	Mylar	0.068μF	50V
C114	8C44833J23	Mylar	0.068μF	50V
C115	21C45322G40	Ceramic	560pF	50V
C116	21C45322G40	Ceramic	560pF	50V
C117	8C44833J17	Mylar	0.022μF	50V
C118	8C44833J17	Mylar	0.022μF	50V
C119	21C45322G35	Ceramic	180pF	50V
C120	21C45322G35	Ceramic	180pF	50V
C121	23S41059P26	Tantalum	10μF	16V
C122	23S41059P26	Tantalum	10μF	16V
C123	23D44333G05	Electrolytic	4.7μF	10V
C124	23D44333G24	Electrolytic	47μF	10V
C125	23D44333G08	Electrolytic	10μF	16V

BOOSTER UNIT

Ref. No.	Part No.	Description		
SEMICONDUCTORS				
IC201	51T40947T01	IC	TA7222P	
IC202	51T40947T01	IC	TA7222P	
IC203	51T40947T01	IC	TA7222P	
IC204	51T40947T01	IC	TA7222P	
D301	48C40235G02	Diode	10E2	
T301	25T40945T01	Choke Trans.	0.2mH	
SW-A	40T40336U01	Push Switch	Power/Defeat	
B	40T40336U01	Push Switch	Power/Defeat	
C	40T40336U01	Push Switch	Power/Defeat	
D	40T40336U01	Push Switch	Power/Defeat	
E	40T40336U01	Push Switch	Power/Defeat	
RESISTORS				
R201	6S41801P56	Carbon Film	100kΩ	1/4W
R202	6S41801P56	Carbon Film	100kΩ	1/4W
R203	6S41801P41	Carbon Film	5.6kΩ	1/4W
R204	6S41801P41	Carbon Film	5.6kΩ	1/4W
R205	6S41801P24	Carbon Film	220Ω	1/4W
R206	6S18001P24	Carbon Film	220Ω	1/4W
R207	6S41801P49	Carbon Film	27kΩ	1/4W
R208	6S41801P49	Carbon Film	27kΩ	1/4W
R209	6S41801P24	Carbon Film	220Ω	1/4W
R210	6S41801P24	Carbon Film	220Ω	1/4W
R211	6S41801P24	Carbon Film	220Ω	1/4W
R212	6S41801P24	Carbon Film	220Ω	1/4W
R213	6S41801P24	Carbon Film	220Ω	1/4W
R214	6S41801P24	Carbon Film	220Ω	1/4W
R215	6C44652G21	Metal Film	18Ω	1/2W
R216	6C44652G21	Metal Film	18Ω	1/2W
R217	6D44744G05	Carbon Film	5.6Ω	1/2W
R218	6D44744G05	Carbon Film	5.6Ω	1/2W
R301	6S41801P32	Carbon Film	1k	1/4W
CAPACITORS				
C201	23D44333G25	Electrolytic	47μF	16V
C202	23D44333G25	Electrolytic	47μF	16V
C203	23D44333G25	Electrolytic	47μF	16V
C204	23D44333G25	Electrolytic	47μF	16V
C205	8C44833J27	Mylar	0.15μF	50V
C206	8C44833J27	Mylar	0.15μF	50V
C207	23D44333G08	Electrolytic	10μF	16V
C208	23D44333G08	Electrolytic	10μF	16V
C209	8C44833J27	Mylar	0.15μF	50V
C210	8C44833J27	Mylar	0.15μF	50V
C211	23D44333G25	Electrolytic	47μF	16V
C212	23D44333G25	Electrolytic	47μF	16V
C213	8C44833J25	Mylar	0.1μF	50V
C214	8C55833J25	Mylar	0.1μF	50V
C215	23D44333G25	Electrolytic	47μF	16V
C216	23D44333G25	Electrolytic	47μF	16V
C217	23D44333G60	Electrolytic	2200μF	16V
C218	23D44333G60	Electrolytic	2200μF	16V
C219	23D44333G60	Electrolytic	2200μF	16V
C220	23D44333G60	Electrolytic	2200μF	16V
C221	23D44333G13	Electrolytic	22μF	16V
C222	23D44333G13	Electrolytic	22μF	16V
C223	8C44833J01	Mylar	0.001μF	50V
C224	8C44833J01	Mylar	0.001μF	50V
C301	23D44333G60	Electrolytic	2200μF	16V

L.E.D. P.C.BOARD

Ref. No.	Part No.	Description		Ref. No.	Part No.	Description	
LED1	48T40955T01	L.E.D.	TLR-124	LED4	48T40955T01	L.E.D.	TLR-124
LED2	48T40955T01	L.E.D.	TLR-124	LED5	48T40955T01	L.E.D.	TLR-124
LED3	48T40955T01	L.E.D.	TLR-124				

MISCELLANEOUS

Ref. No.	Part No.	Description	Ref. No.	Part No.	Description
J1	1D40889P31	Assy., Fuse Receptacle	J7	30T40944T04	Cable Output
J2	30B43308G09	Earth, Wire Assy.	J8	30T40944T01	Cable Connector
J3	30T41532U01	Cable Input R	J9	30T40944T03	Cable Output
J4	30T41531U01	Cable Input L	LED6	48T40955T01	L.E.D. TLR-124
J5	30T41548U01	Cable Input G	VR201	18T40359U02	Fader Control
J6	30T40944T02	Cable Connector			

GENERAL ASSEMBLY PARTS

Ref. No.	Part No.	Description	Q'ty
1	1V42300U26	Assy., Booster Panel	1
2	3S44205G03	Scr., Tap Tite (M3x8)	4
3	7B42154U01	Bkt., Heat Sink	2
4	1V43100U49	Assy., EQ Panel	1
5	3S40011G33	Scr., Mch. (M2x4)	10
6	7B40872T01	Bkt., Front	1
7	3S40018G02	Scr., Tpg. (M3x8)	2
8	3B40942T01	Scr., Hex Socket	4
9	3S44205G19	Scr., Tap Tite (M3x8)	4
10	3S44205G01	Scr., Tap Tite (M3x6)	2
11	3S44205G23	Scr., Tap Tite (M3x4)	6
12	13B43754U01	Bezel Front	1
13	14A40964T01	Cover Dust	1
14	15C40875T02	Cover Bottom	1
15	15C41540U01	Cover Top	1
16	36B40878T02	Knob Control	5
17	36B40879T02	Knob Push	1
18	42B41424G03	Clamp Cord	1
19	42B41424G02	Clamp Cord	1
20	84C40951T02	Panel L.E.D. (A)	
21	1V42300U28	Assy., Panel L.E.D. (B)	1
22	37S44468G21	UL/CSA Tube Vinyl	1
23	84B41778U01	Panel Fader	1
24	4S40070G28	Washer (9.1x14x0.5)	1
25	2S40000G15	Nut	1
26	43A40784T01	Spacer Holder	1

Ref. No.	Part No.	Description	Q'ty
27	36T43766U01	Knob Fader	1
28	14A42215J05	Insulator Fiber	1
29	14A44511U04	Insulator Fiber	1
30	37S44468G18	UL/CSA Tube	1
	< ASSY., PACKING >		
101	56B40990T21	Sack, Polyethylene	1
102	56C40939T01	Tray, Packing	2
103	42B40994G05	Strap, Receiver MTG	1
104	7B40251T01	Bracket, MTG	1
105	56A42967U01	Pad Sheet	1
106	56C41534U01	Carton Packing (Ind.)	1
107	56C41535U01	Carton Packing (Master)	1/6
108	56A43276P04	Pad Packing	2/6
109	1V40500T82	Assy., Kit Installation	1
109-1	56B40230G27	Sack, Polyethylene	1
109-2	3A43315G02	Scr., Mch.	3
109-3	4S40072G11	Washer Tooth Lock	3
109-4	3S40012G39	Screw., TPG (M5-20)	3
109-5	45K5388873	Arm, Adopter	1
109-6	9A60992A01	Connector	7
110	1V42300U31	Assy., Pamphlet	1
110-1	56B40230G12	Sack, Polyethylene	1
110-2	68P44360P60	Owner's Guide	1

12. PACKING METHOD

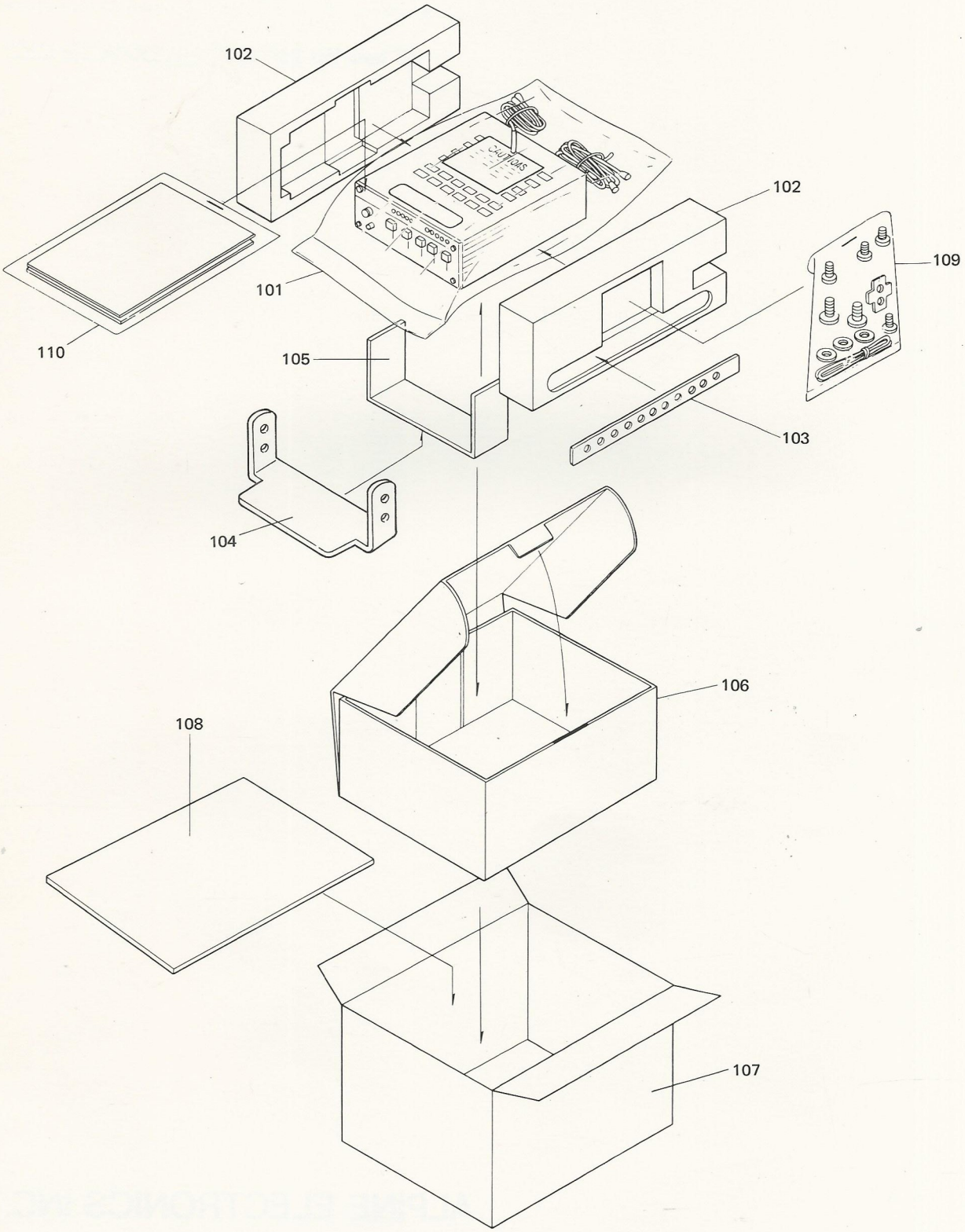

Figure 23