PHILIPS Service notes

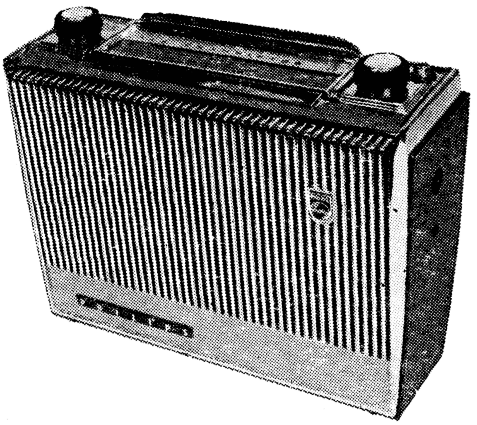

MODEL PA3

Automate

SPECIFICATIONS

Tuning range	520-1620 kc/s.
Intermediate frequency	455 kc/s.
Power supply—battery	Type 2761 (9V)
Battery consumption	see table below

ALIGNMENT

Location of the various trimming points used in alignment is shown in the interconnection drawing.

I.F. Alignment

Fully open tuning capacitor, apply signal generator through normal I.F. dummy to base of TR1. Detune secondaries of 1st and 2nd I.F.Ts by screwing out cores about one turn. Peak cores in the following order at the quoted frequencies:

3rd I.F.T.	455 kc/s.
2nd I.F.T. primary	454 kc/s.
1st I.F.T. primary	454 kc/s.
2nd I.F.T. secondary	456 kc/s.
1st I.F.T. secondary	456 kc/s.

Repeak 3rd I.F.T. at 455 kc/s.

R.F. Alignment (Car)

Position aerial switch for car use, put volume control at maximum. Apply the signal generator to the aerial socket through a dummy consisting of a capacitor of 120 pF across the socket and another of 15 pF in series with the generator lead. Fully close the tuning capacitor and adjust the dial cursor to the stop mark of the dial scale.

Tune to 600 kc/s. (7ZL) and with generator at that frequency, peak cores of oscillator coil and aerial coil.

Tune to 1500 kc/s (3AK) and with generator at that frequency, peak oscillator and aerial trimmers.

Repeat these adjustments until tracking is satisfactory.

R.F. Alignment (Portable)

Position aerial switch for portable use. Apply the signal generator via a coupling turn around the rod aerial assembly.

At this stage, the correct position of the rod aerial assembly for minimum 910 kc/s instability must be determined. Tune receiver and adjust generator to 600 kc/s and position aerial coil, on rod for peak. Open the tuning capacitor until plates are 90° to the frame. The rod aerial assembly should be positioned such that the distance between the nearest point of the vanes of the oscillator section of the capacitor to the mid-point of the aerial coil is greater than or equal to 5/16 inch.

Tune to 600 kc/s (7ZL) and with generator at that frequency, adjust aerial coil position for peak.

Tune to 1500 kc/s (3AK) and with generator at that frequency, peak aerial trimmer (ceramic).

Repeat these adjustments until tracking is satisfactory.

OUTPUT TRANSISTOR ADJUSTMENT

Provision is made by means of metering points for easy insertion of a meter for adjustment of output transistor current by means of R108. Current should be adjusted, at no signal, in accordance with the following table. This table also includes total receiver current.

Temp. °F.	TR103/104 Current mA.	Receiver Current mA.
50	2.25	13.2
55	2.6	13.7
60	2.95	14.2
65	3.3	14.7
70	3.65	15.2
75	4.0	15.6
80	4.3	16.0
85	4.6	16.5
90	4.9	16.9
95	5.2	17.4
100	5.5	17.85
105	5.8	18.4
110	6.2	19.0
115	6.6	19.8

MODULE REMOVAL

Remove case back.

The R.F. module can be checked from the underside by unclipping from its can mounting base. This unit can also be readily replaced if necessary at this point.

The audio module can be checked from the components side while in situ, but for inspection of the underside, or replacement, it is first necessary to free the common mounting board as follows:—

Remove both control knobs.

Unsolder earthing lug from grille to aerial switch mounting bracket.

Remove four mounting screws.

Turn cursor to low frequency end and withdraw mounting board assembly until tuning spindle and aerial switch knob are clear of escutcheon.

Pivot board upwards through 90° at the same time releasing cursor.

Straighten module mounting spills and separate module from mounting board. The audio module may now be replaced.

December, 1965

Published by Philips Electrical Pty. Ltd., Australia
Branches in all States

PA3

MECHANICAL PARTS LIST

Description	Code No.
Aerial socket parts—	
body (soldered to control bracket assy.)	A3.822.52
corrugated spring	A3.647.84
contact	A3.647.82
bush	P5.172.48
Badge — Philips	CS.436.534
Bush — aerial switch	CS.116.547
Carrying handle	CS.432.436
Case back assy. (back and wedges)— maroon	CR.570.788
grey	CR.570.789
Dial scale, S.A./W.A.	CS.412.474
Dial scale, N.S.W./TAS.	CS.412.475
Dial scale, VIC./QLD.	CS.412.476
Dial cord, 29″ required, bulk	CE.085.91
Dial cord spring	CS.200.044
Dial cursor assy.	CR.480.687
Dial drum assy.	CR.382.210

Description	Code No.
Dial window	CS.412.495
Escutcheon—front	CS.430.154
Escutcheon—top	CS.430.153
Knob—tuning and volume, 2x	CR.523.573
Knob—aerial switch	CS.432.585
Pin—handle pivot, 2x	CS.351.805
Plug—2 pin pol. (battery lead)	CZ.365.120 C/F.691-5-2
Plug—ext. speaker	CZ.365.054
Socket—ext. speaker	CZ.369.942
Spring—carrying handle, 2x	CS.200.043
Switch—aerial changeover	CZ.220.704
Screw—case base back fastening	CS.258.896
Screw—dial scale mtg., 2x	CH.496.214.0G
Screw—top escutcheon to front, 2x	CS.283.022
Tuning spindle assy.	CR.371.240

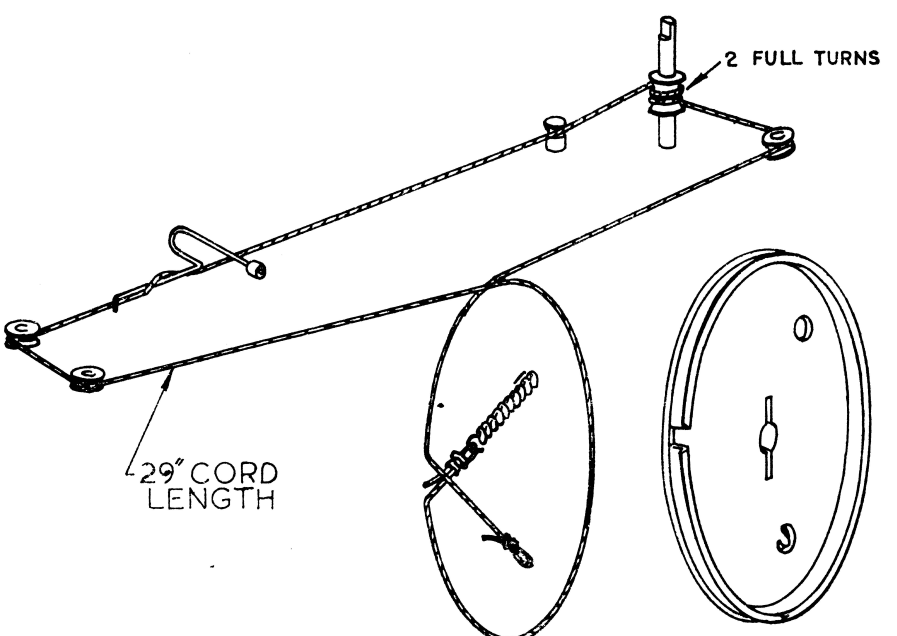

EXPLODED VIEW FROM FRONT, SHOWING GANG CONDENSER IN CLOSED POSITION.

PA3

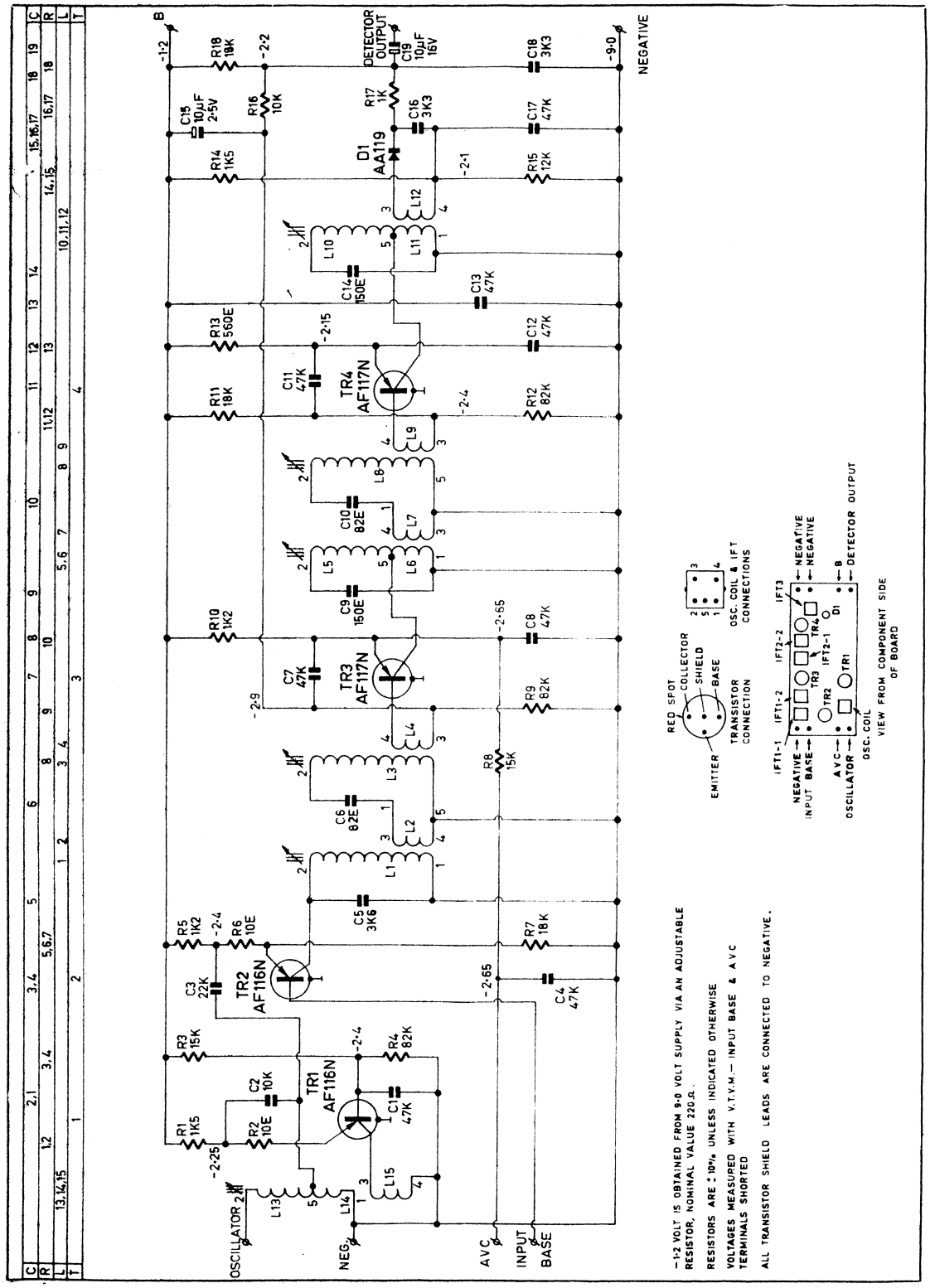
B
-1·2
R18 18K
-2·2
DETECTOR OUTPUT
C19 10µF 16V
C18 3K3
-9·0
NEGATIVE
C15 10µF 2·5V
R16 10K
R17 1K
C16 3K3
C17 47K
D1 AA119
R14 1K5
-2·1
R15 12K
L12
L10
L11
C14 150E
C13 47K
R13 560E
-2·15
C12 47K
C11 47K
TR4 AF117N
R11 18K
-2·4
R12 82K
L9
L8
L7
C10 82E
L5
L6
C9 150E
R10 1K2
-2·65
C8 47K
C7 47K
TR3 AF117N
-2·9
R9 82K
L4
L3
R8 15K
C6 82E
L2
L1
C5 3K6
R5 1K2
-2·4
R6 10E
R7 18K
C3 22K
TR2 AF116N
C4 47K
-2·65
R3 15K
-2·4
R4 82K
C2 10K
TR1 AF116N
C1 47K
R1 1K5
R2 10E
-2·25
L15
L13
L14
OSCILLATOR
NEG.
AVC
INPUT BASE
RED SPOT
COLLECTOR
SHIELD
BASE
EMITTER
TRANSISTOR CONNECTION
OSC. COIL & IFT CONNECTIONS
IFT1-1
IFT1-2
IFT2-2
IFT3
NEGATIVE
INPUT BASE
AVC
OSCILLATOR
TR2
TR1
TR3
IFT2-1
TR4
D1
B
DETECTOR OUTPUT
OSC. COIL
VIEW FROM COMPONENT SIDE OF BOARD
-1·2 VOLT IS OBTAINED FROM 9·0 VOLT SUPPLY VIA AN ADJUSTABLE RESISTOR, NOMINAL VALUE 220Ω.
RESISTORS ARE ± 10% UNLESS INDICATED OTHERWISE
VOLTAGES MEASURED WITH V.T.V.M.— INPUT BASE & AVC TERMINALS SHORTED
ALL TRANSISTOR SHIELD LEADS ARE CONNECTED TO NEGATIVE.

L	201 · 202-3-4		205 - 6						(L1 - L15)					207
R									(R1 - R18)			201	(R101 - R111)	
C	202, 201	300		203	208	204 - 205	206 - 207		(C1 - C19)	209	210		(C101 - C106)	
TR									(TR1 - TR4)				(TR101 - TR104)	

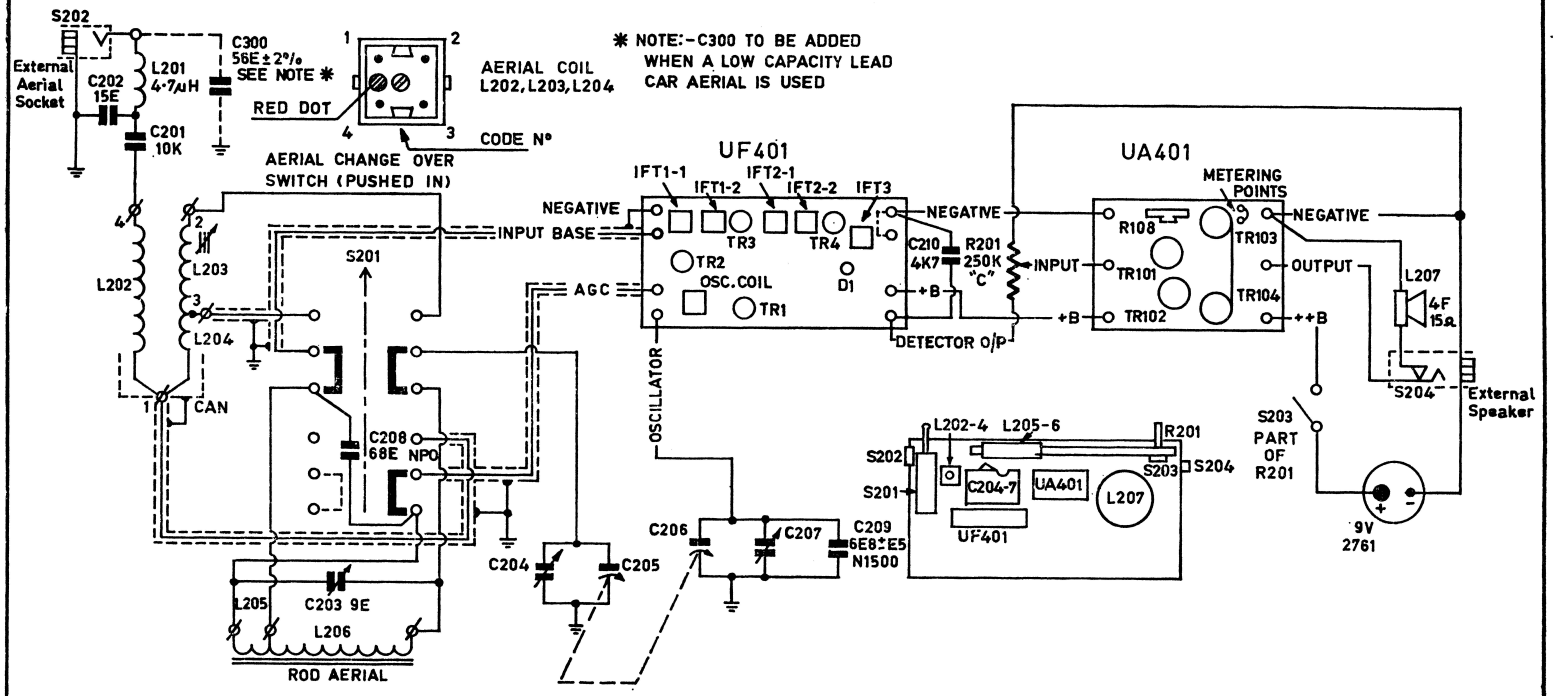

PA3

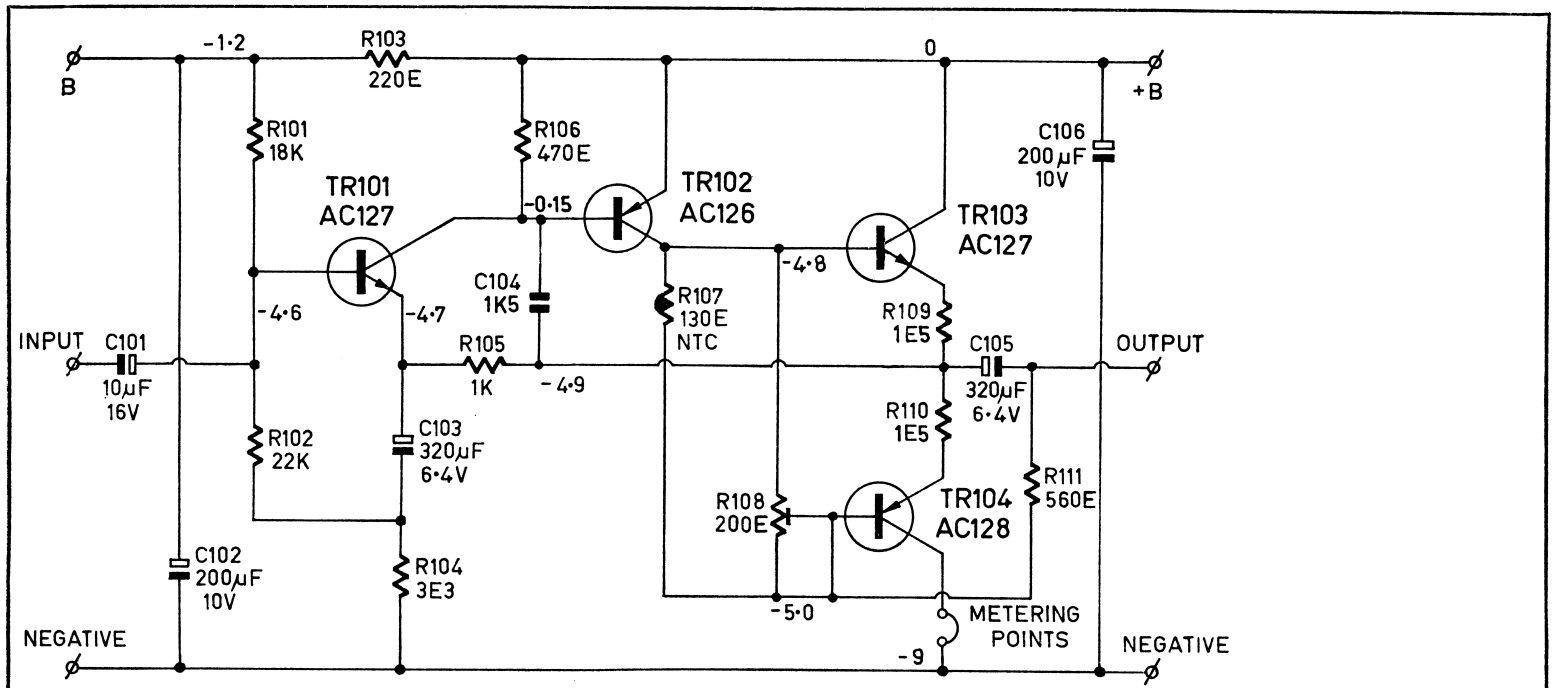

NOTE ON CONDENSERS:
WHOLE NUMBERS - pF UNLESS INDICATED OTHERWISE.
TOLERANCE POLYESTERS: ± 10%
TOLERANCE ELECTROLYTICS: -10 + 50%

RESISTORS ARE ± 10% UNLESS INDICATED OTHERWISE.

VOLTAGES MEASURED WITH VTVM AND 1K5 ± 10% CONNECTED BETWEEN B AND NEGATIVE.

ZERO SIGNAL COLLECTOR CURRENT TR103/TR104 IS SET BY MEANS OF R108 TO 4·0mA AT 75°F.

COLLECTOR PNP: RED SPOT.
COLLECTOR NPN: BLUE SPOT.

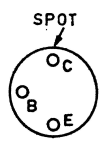

TRANSISTOR CONNECTIONS

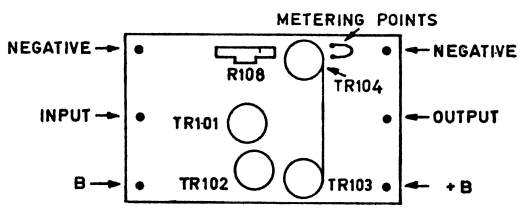

VIEW FROM COMPONENT SIDE OF BOARD

PA3

ELECTRICAL PARTS LISTS

CAPACITORS

C. No.	Description	V.W.	Tol. ±%	Type or Code No.
1	47K ceramic	25	+80—20	Ducon CDR
2	10K ceramic	25	+80—20	Ducon CDR
3	22K ceramic	25	+80—20	Ducon CDR
4	47K ceramic	25	+80—20	Ducon CDR
5	3K6 Styroflex	100	5	C.285.AA/B3K6
6	Part of 1st I.F.			
7	47K ceramic	25	+80—20	Ducon CDR
8	47K ceramic	25	+80—20	Ducon CDR
9	Part of 2nd I.F.			
10	Part of 2nd I.F.			
11	47K ceramic	25	+80—20	Ducon CDR
12	47K ceramic	25	+80—20	Ducon CDR
13	47K flat foil	40	20	C.280.AA/P47K
14	Part of 3rd I.F.			
15	10M electrolytic	2.5		C.426.AS/A10
16	3K3 ceramic, pin up		—20+50	C.322.BA/H3K3
17	47K ceramic	25	+80—20	Ducon CDR
18	3K3 ceramic, pin up		—20+50	C.322.BA/H3K3
19	10M electrolytic	16		C.426.AR/E10
101	10M electrolytic	16		C.426.AR/E10
102	200M electrolytic	10		C.426.AR/D200
103	320M electrolytic	6.4		C.426.AR/C320
104	1K5 Polyester	400	10	C.296.AC/A1K5
105	320M electrolytic	6.4		C.426.AR/C320
106	200M electrolytic	10		C.426.AR/D200
201	10K Polyester	160	10	C.296.AA/A10K
202	15E ceramic, NPO		10	C.304.GB/A15E
203	9E ceramic trimmer			C.004.CA/9E
204-5	Tuning capacitor			CZ.107.610
206-7	and trimmers			MSP.K2XT
208	68E ceramic, NPO		5	C.304.GB/B68E
209	6E8 ceramic, N1500		0.5pF	Ducon CTR
210	4K7 Polyester	400	10	C.296.AC/A4K7

RESISTORS

R. No.	Description	W.	Tol. ±%	Type or Code No.
1	1K5 carbon	½	10	1RC BTS
2	10E carbon	½	10	1RC BTS
3	15K carbon	½	10	1RC BTS
4	82K carbon	½	10	1RC BTS
5	1K2 carbon	½	10	1RC BTS
6	10E carbon	½	10	1RC BTS
7	22K carbon	½	10	1RC BTS
8	15K carbon	½	10	1RC BTS
9	82K carbon	½	10	1RC BTS
10	1K2 carbon	½	10	1RC BTS
11	18K carbon	½	10	1RC BTS
12	82K carbon	½	10	1RC BTS
13	560E carbon	½	10	1RC BTS
14	1K5 carbon	½	10	1RC BTS
15	12K carbon	½	10	1RC BTS
16	10K carbon	½	10	1RC BTS
17	1K carbon	½	10	1RC BTS
18	18K carbon	½	10	1RC BTS
101	18K carbon	½	10	1RC BTS
102	22K carbon	½	10	1RC BTS
103	220E carbon	½	10	1RC BTS
104	3E3 metal oxide	¼	10	E.017.BC/A3E3
105	1K carbon	½	10	1RC BTS
106	470E carbon	½	10	1RC BTS
107	130E NTC disc.	1	10	E.201.BC/A130E
108	200E carbon potentiometer, pre-set (bias adj.)			E.086.AC/200E
109	1E5 metal oxide	¼	10	E.017.BC/A1E5
110	1E5 metal oxide	¼	10	E.017.BC/A1E5
111	560E carbon	½	10	1RC BTS
201	250K carbon potentiometer, taper C, with D.P.S.T. rotary switch (volume —on/off)			CZ.032.048 1RC series 200

INDUCTORS

L. No.	Description	Code No.
1, 2	Primary and coupling 1st I.F.T.	CZ.651.000
3, 4	Secondary and coupling 1st I.F.T.	CZ.651.001
5, 6, 7	Primary and coupling 2nd I.F.T.	CZ.651.002
8, 9	Secondary and coupling 2nd I.F.T.	CZ.651.001
10, 11, 12	3rd I.F.T.	CZ.651.005
13, 14, 15	Oscillator coil	CZ.652.000
201	Aerial choke, 4.7μH	CZ.122.707 1RC CLA
202, 203	Aerial coil	CZ.323.099
204	Screw core assy. for above	A3.960.20
205, 206	Rod aerial assy.	CZ.323.083
	Ferroxcube rod for above	CS.152.478 cut to 6 5/16"
207	Speaker, Rola 4F, F97, 15—Ω—	CZ.161.009