Auto cassette deck P6

Version 5

Service
Service
Service

Service Manual

12 V

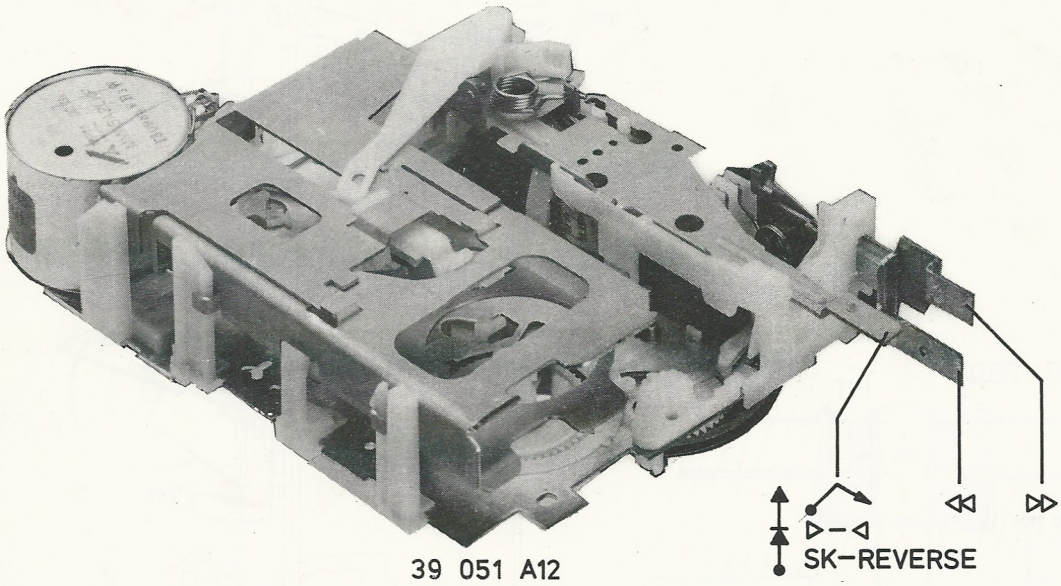

39 051 A12

SPECIFICATION

Tape speed	: 4.76 cm/sec. ± 2% (10-45°C)
Working voltage	: 8.4-15 V
Wow and flutter	: ⩽ 0.3% (10-45°C)
Crosstalk	: ⩾ 35 dB (1 kHz)
Fast-wind time (C60)	: ⩽ 110 sec.
Number of tracks	: 2 x 2

Documentation Technique Service Dokumentation Documentazione di Servizio Huolte-Ohje Manual de Servicio Manual de Serviçio
Subject to modification
GB 4822 725 20853
Printed in The Netherlands
Published by
Service Consumer Electronics

OPERATION OF TAPE TRANSPORT (Figs. 1 ... 5)

In the aforementioned Figures arrows indicate the movements made by the parts to accomplish a definite operation.
The appended tables show the sequence of the movements as they should be read in the Figures.
For this, the following system has been adopted:

1 → 3, 2 : movement of two different parts

1 → 2, 2a : movement of a part composed of several pieces, which, for improved clarity of the Figure, is drawn at different places (e.g. friction).

Fig. 1 indicates the initial position
Figs. 2 ... 5 show the situation at the end of the sequence of movements starting from the situation shown in Fig. 1 (cassette inserted; tape transport in PLAY position).

MAINTENANCE

It is recommended to clean the tape transport and lubricate the principal points at regular intervals.

1. To be cleaned with alcohol or spirit

- playback head
- capstans
- pressure rollers
- pulleys

To clean head, pressure roller and capstan it is also possible to use a drop-in cleaning cassette (SBC114-4822 389 20015).

2. Lubricating instructions

- See exploded view 38 962E.

SERVICING HINTS

In a few places parts are locked by synthetic bosses. To be able to demount these parts, the bosses have to be bent, displaced, etc.
Gearwheels 107b, 128b and pressure roller brackets 119 are attached to the spindles by means of a snap connection. These parts can be demounted with a screwdriver.
If gearwheel 107b (or 128b) has to be replaced, the corresponding bracket 107a (or 128a) should be replaced also.
For replacement of the various parts see Figs. 6 ... 10.

ADJUSTMENTS AND CHECKS

(Measuring equipment required

– Universal test cassette	SBC419-4822 397 30069
– Universal test cassette	SBC420-4822 397 30071
– Friction test cassette	4822 395 30054
– AC millivoltmeters	
– Spring scale 3-55 gr	
– Wow-and flutter meter	

1. Azimuth (Figs. 11, 12)

- Apply a 4 Ω load to both loudspeaker outputs.
- Connect an AC millivoltmeter across both loudspeaker outputs.
- Play the 10 kHz signal of test cassette SBC419 or SBC420.
- Adjust screw A for the average of the max. output voltages.
- The maximum allowed difference between both channels is 4 dB.
- Switch over to "reverse".
- If the value measured difffers from the previously measured value, bearing 118 in the front flywheel ("reverse") should be displaced.

2. Play tape-up torque and supplying reel drag

- Insert the friction test cassette.
  The play tape-up torque should be 45 to 55 g.cm (both directions), measured after a 2-minute run-in time.
- The supplying reel drag should be 4-6 g.cm both directions.
- In case of deviating values, the relevant play take-up torque or supplying reel drag should be replaced.

3. Pressure roller 119

- Check acc. to Fig. 13.

The pressure of the pressure roller cannot be adjusted; in case of a deviating value spring 172 should be replaced.

4. Wow and flutter/tape speed

This check should be performed on a complete carradio. Proceed as follows:
- Connect wow-and-flutter meter to loudspeaker outputs.
- Insert test cassette SBC419 or SBC420 and play the 3150 Hz signal.
- The wow-and-flutter value should be max. 0.3%.
- The tape speed should be 4.76 cm/sec ± 2%.
  The speed can be adjusted with screw B (Fig. 11).

In case of excessive wow-and-flutter values the following components should be checked for correct working (adjustment).
- motor 132
- pressure rollers 119
- friction clutches 103
- flywheels 116, 137
- belt 117

5. Flywheel 116, 137

- See Fig. 14.

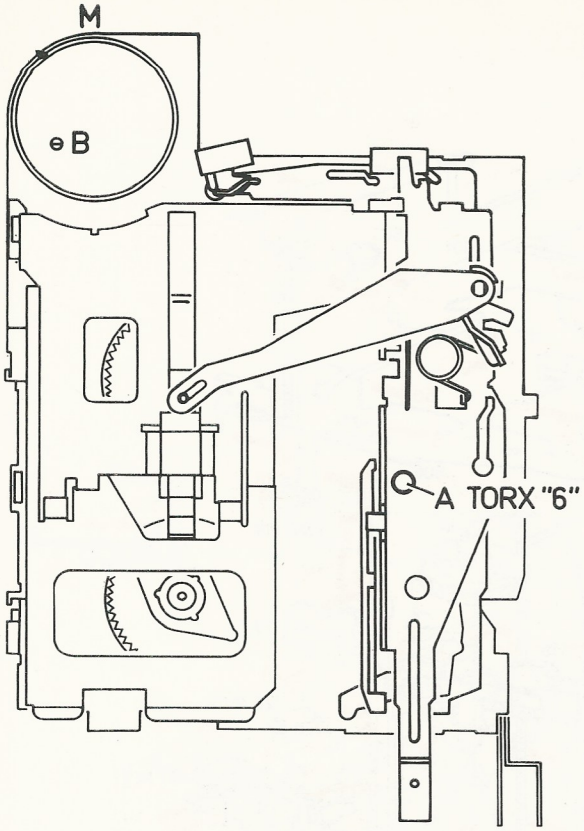

35 977 B12

Fig. 11

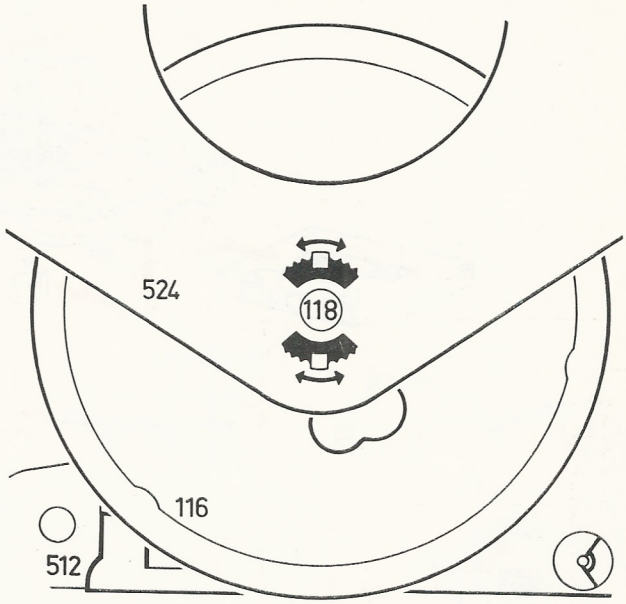

Fig. 12

35 978 A12

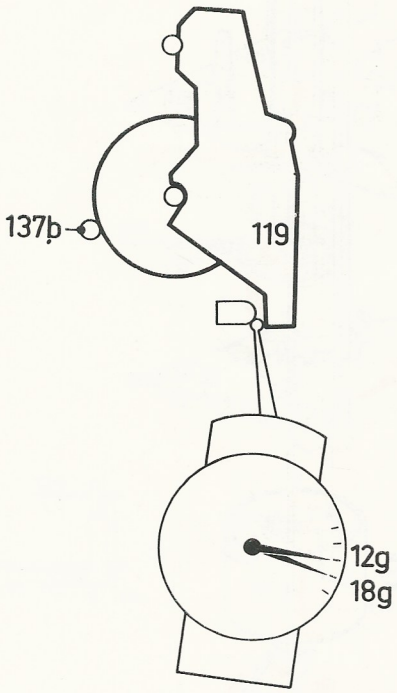

35 979 A12

Fig. 13

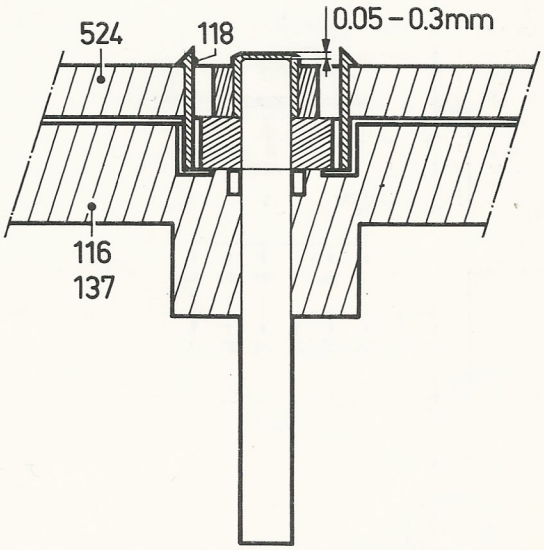

35 980 A12/A

Fig. 14

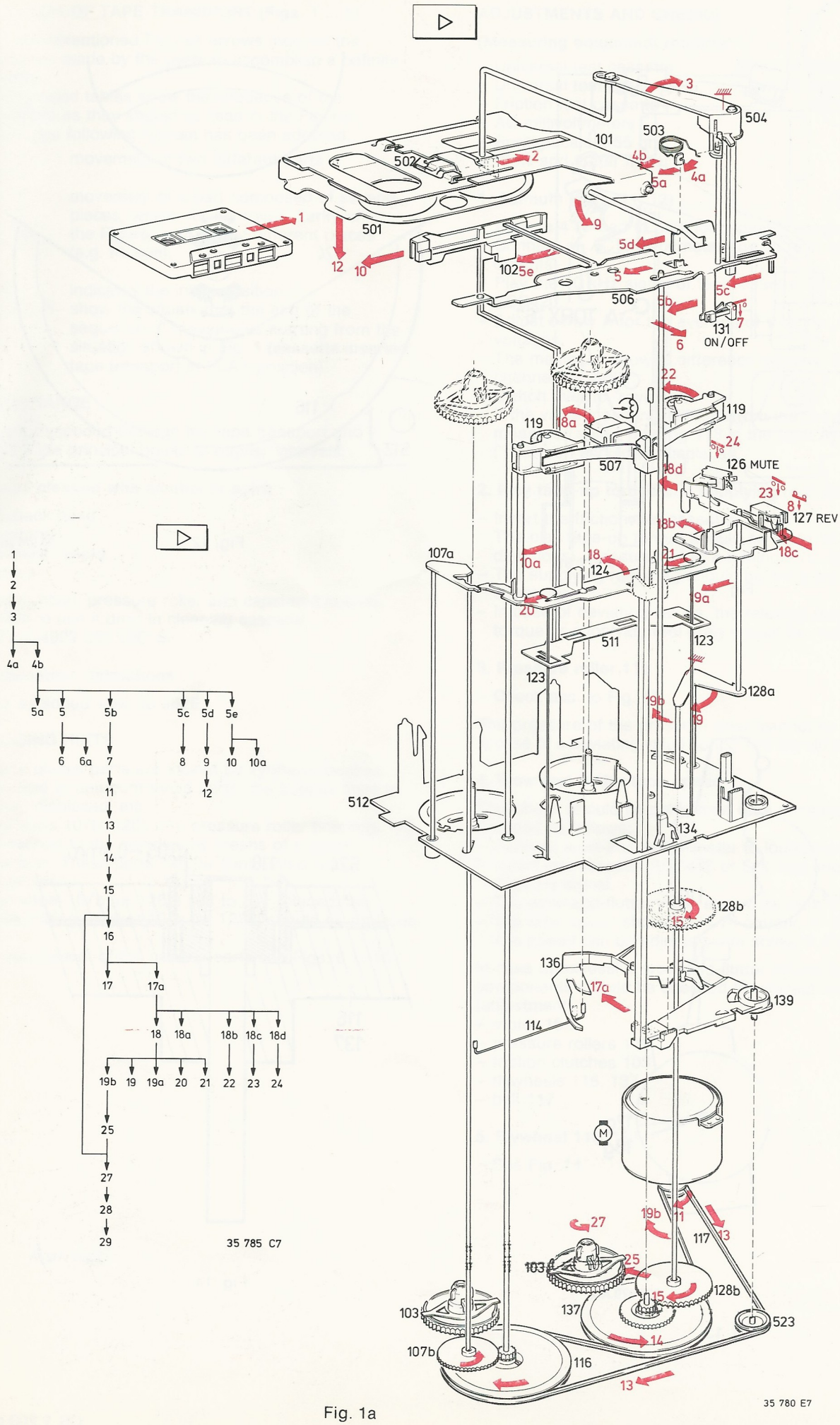
504
503
101
502
501
102
506
131
ON/OFF
119
507
126 MUTE
127 REV
107a
124
511
123
128a
512
134
128b
136
139
114
117
103
137
523
107b
116
35 780 E7
35 785 C7

Fig. 1a

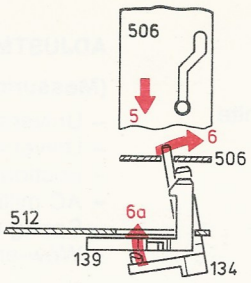

Fig. 1b

35 768 A7

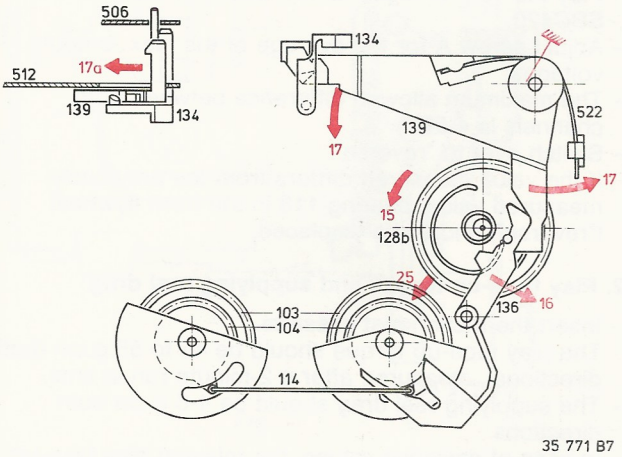

35 771 B7

Fig. 1c

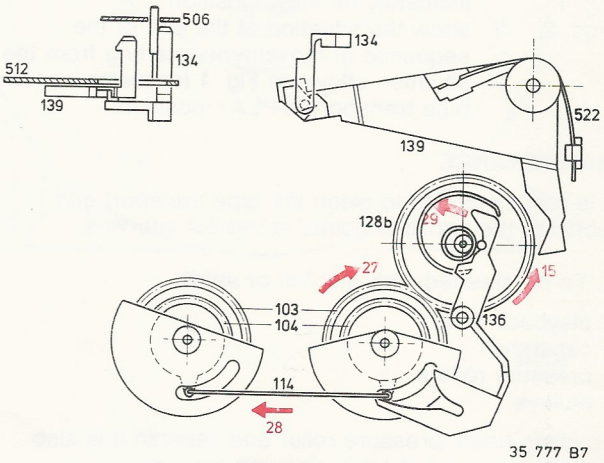

35 777 B7

Fig. 1d

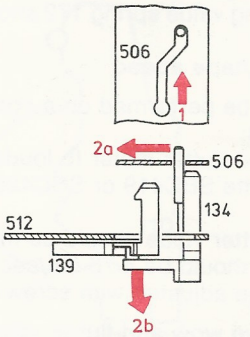

36 026 A7

Fig. 2b

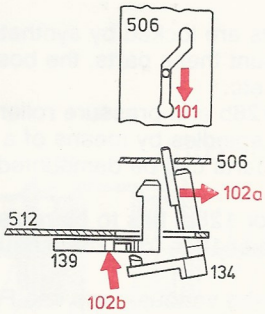

35 767 A7

Fig. 2c

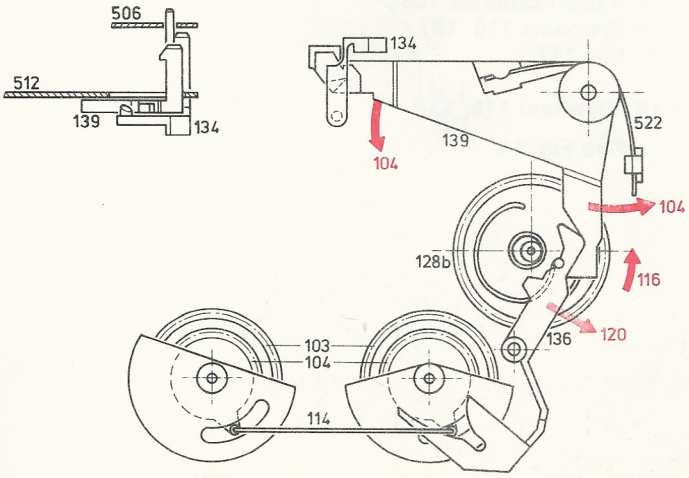

35 773 B7

Fig. 2d

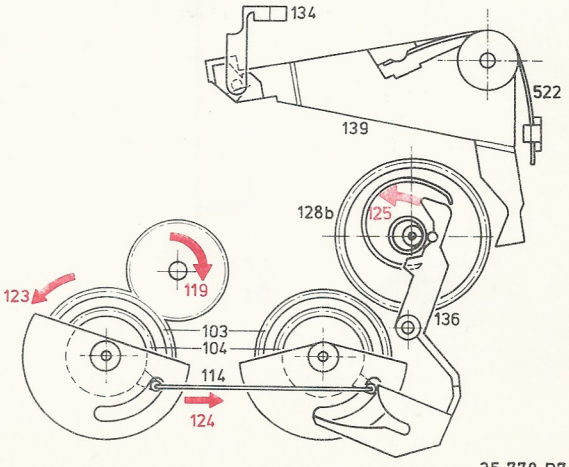

35 778 B7

Fig. 2e

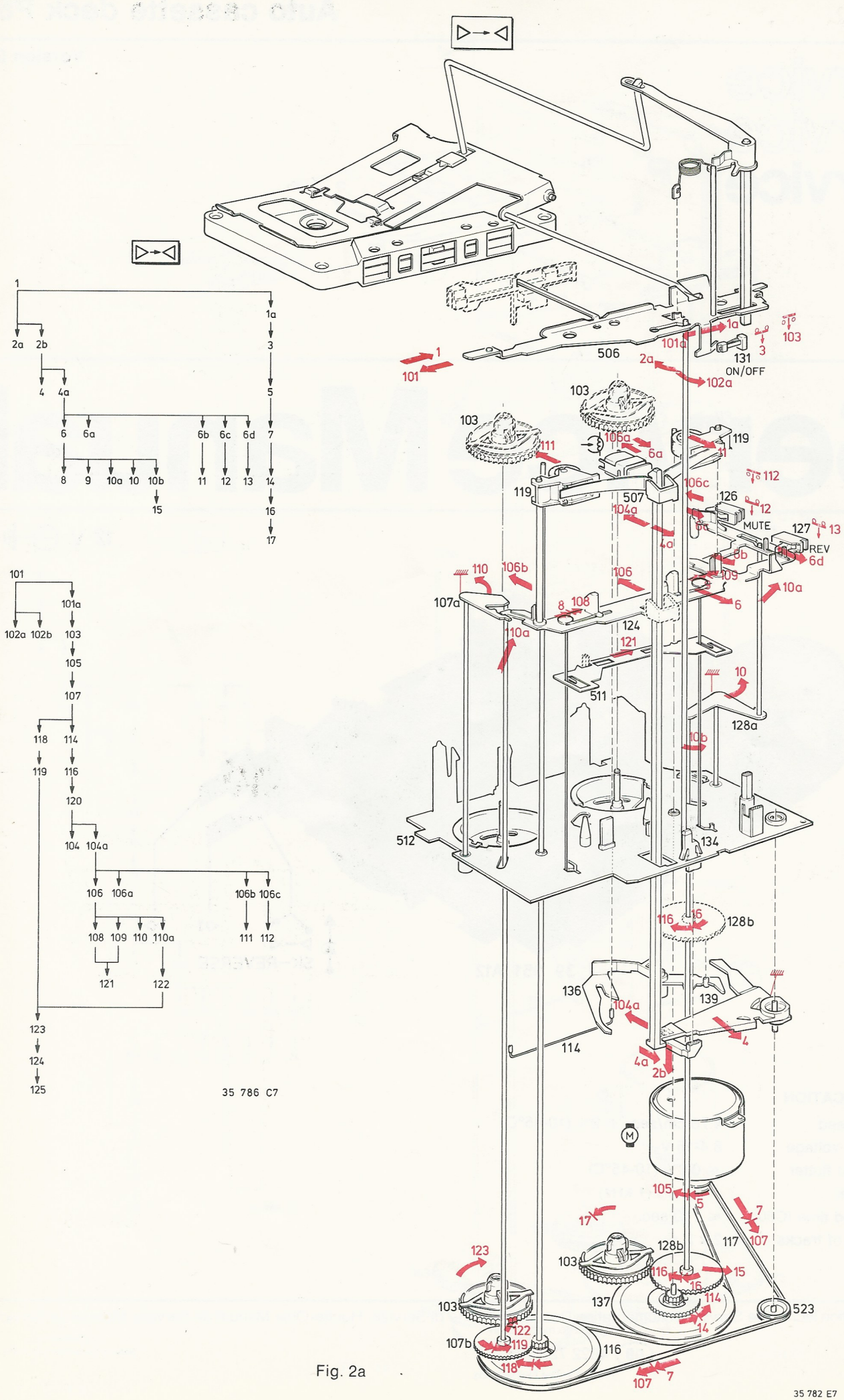
1
1a
2a 2b
3
4 4a
5
6 6a 6b 6c 6d 7
8 9 10a 10 10b 11 12 13 14
15
16
17
101
101a
102a 102b 103
105
107
118 114
119 116
120
104 104a
106 106a 106b 106c
108 109 110 110a 111 112
121 122
123
124
125
35 786 C7
506
131
ON/OFF
103
119
507
126
MUTE
127
REV
124
511
128a
512
134
128b
136
139
114
117
137
523
107b
116
35 782 E7

Fig. 2a

TAPE END

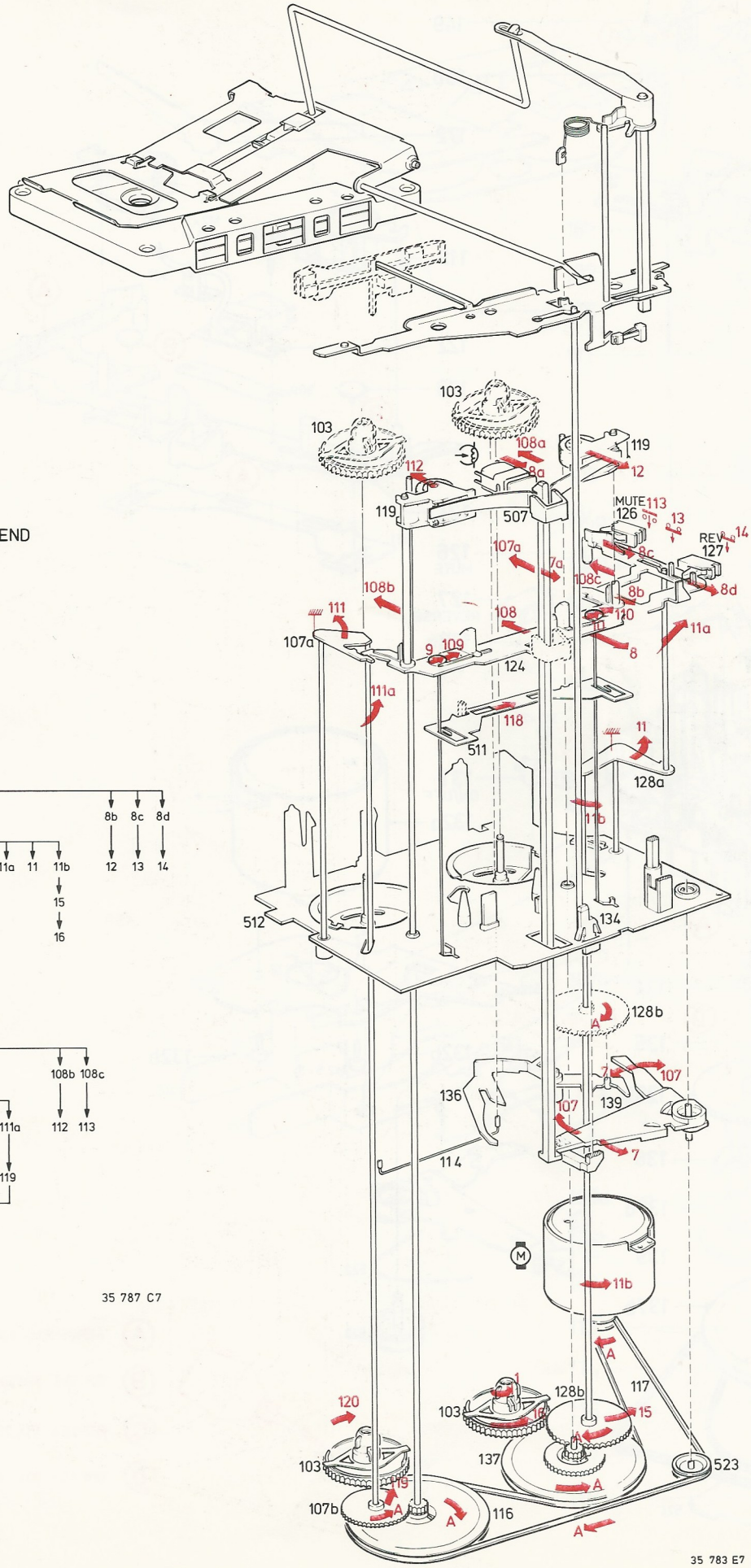

TAPE END

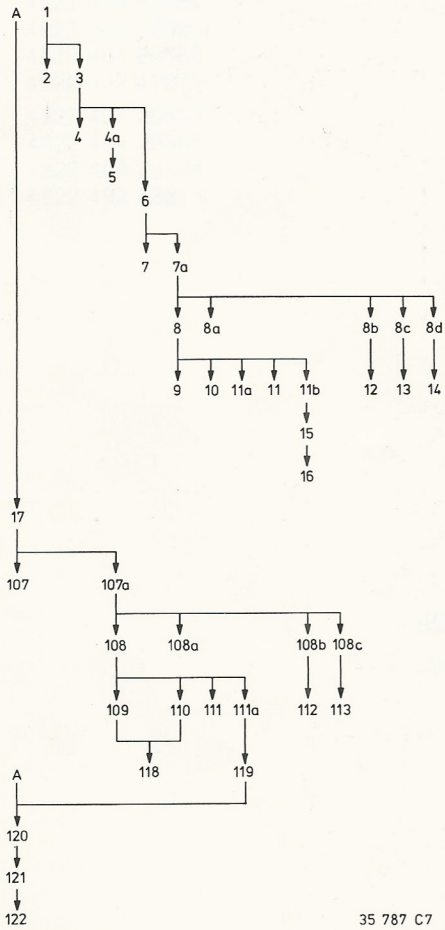

Fig. 3a

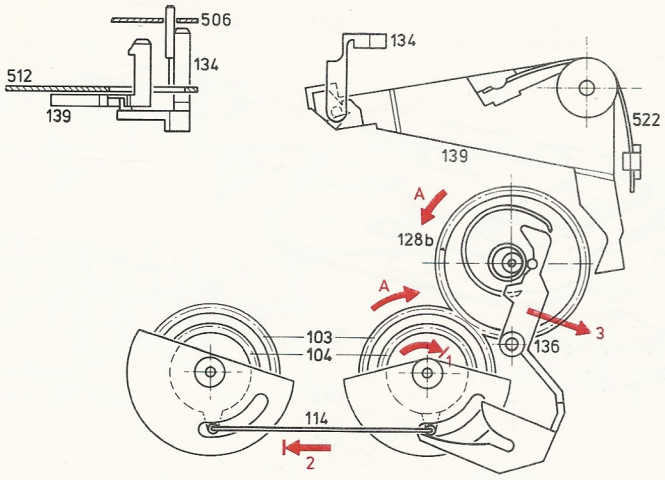

Fig. 3b

35 776 B7

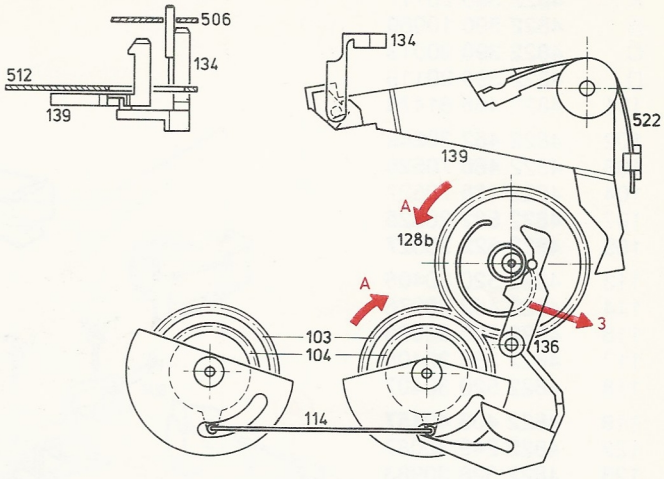

Fig. 3c

35 775 B7

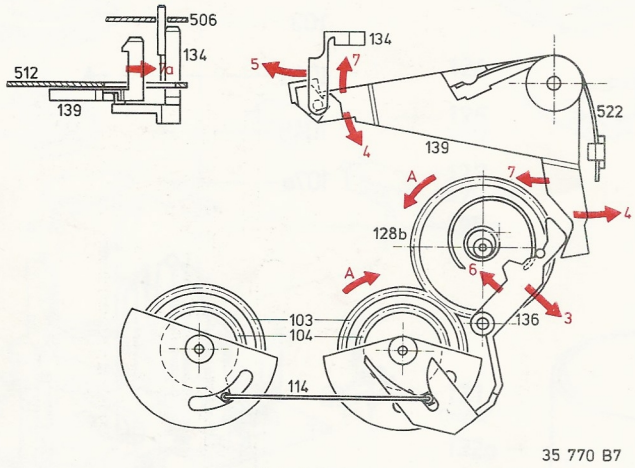

Fig. 3d

35 770 B7

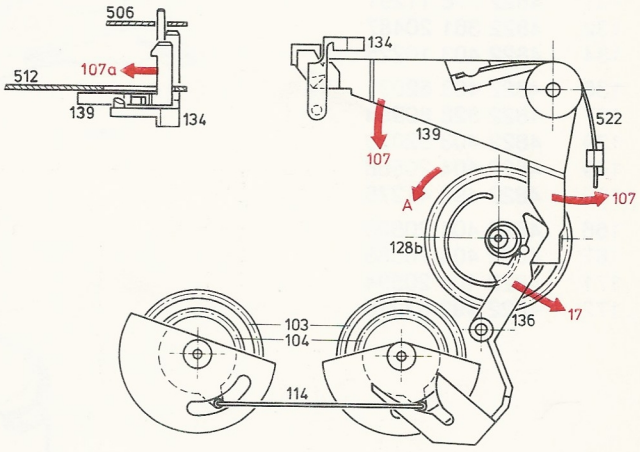

Fig. 3e

35 772 B7

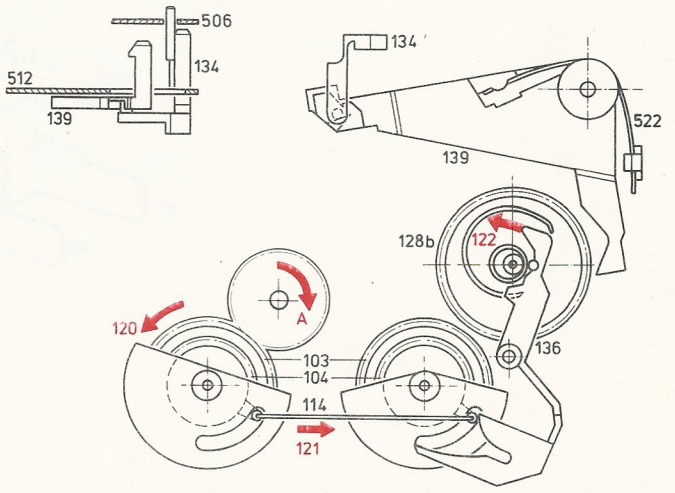

Fig. 3f

35 779 B7

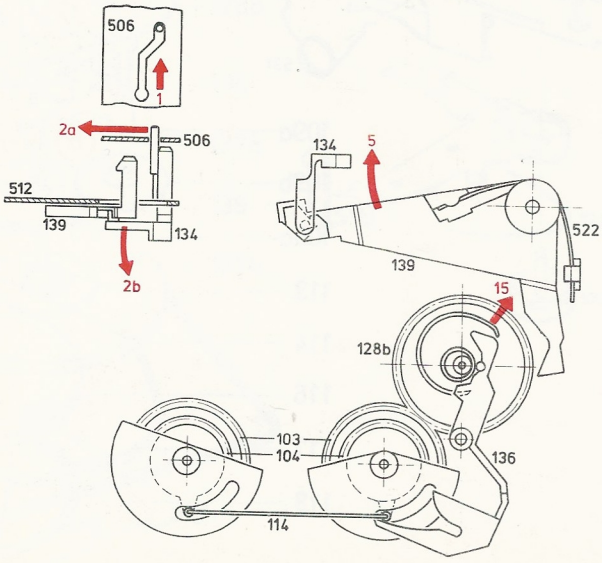

Fig. 4b

35 774 B7

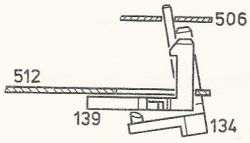

35 769 A7

Fig. 4c

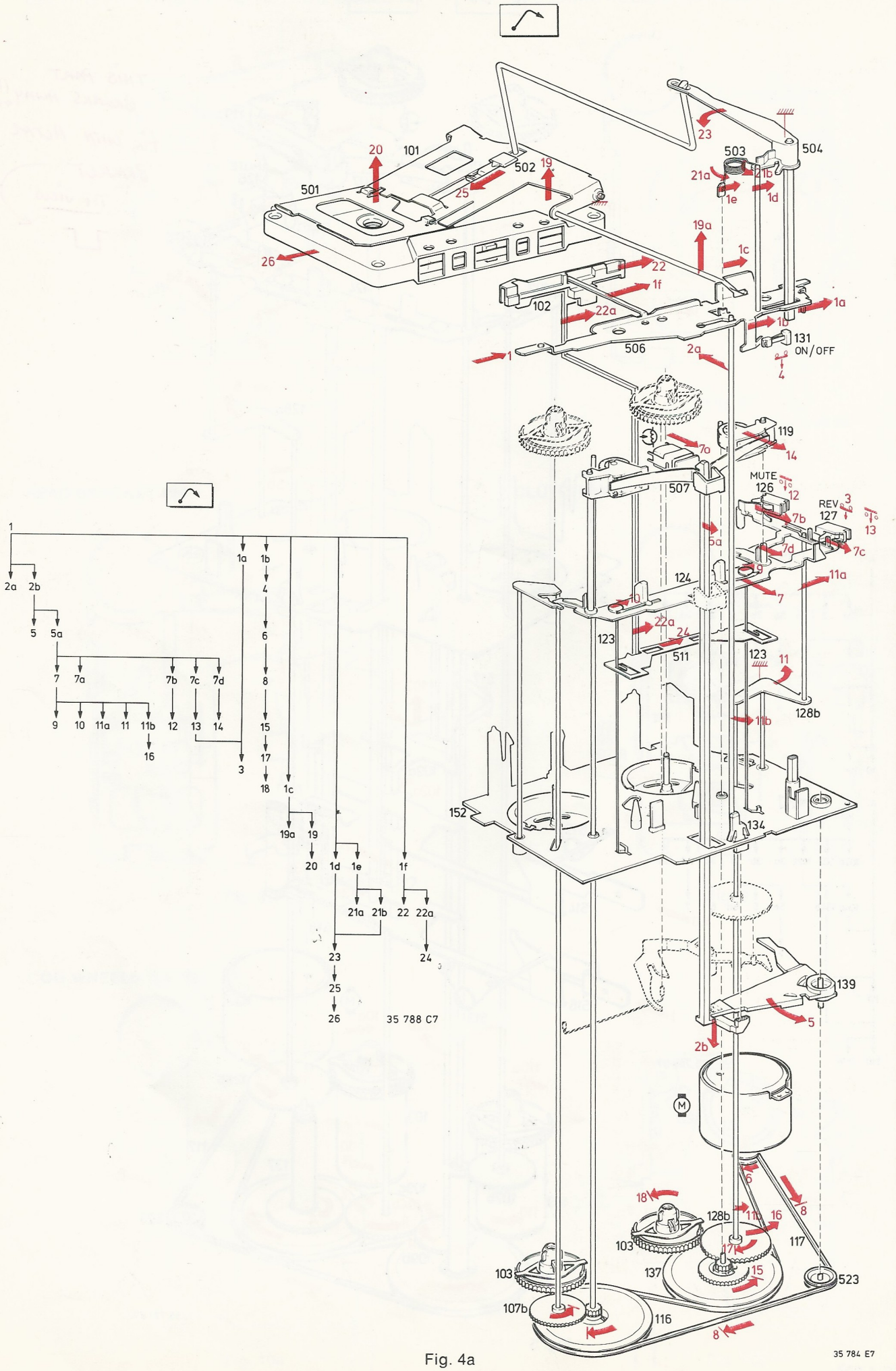
101
501
502
503
504
506
507
102
119
126
127
128b
131
ON/OFF
MUTE
REV
123
124
511
134
139
152
103
107b
116
117
137
523
M
35 788 C7
35 784 E7

Fig. 4a

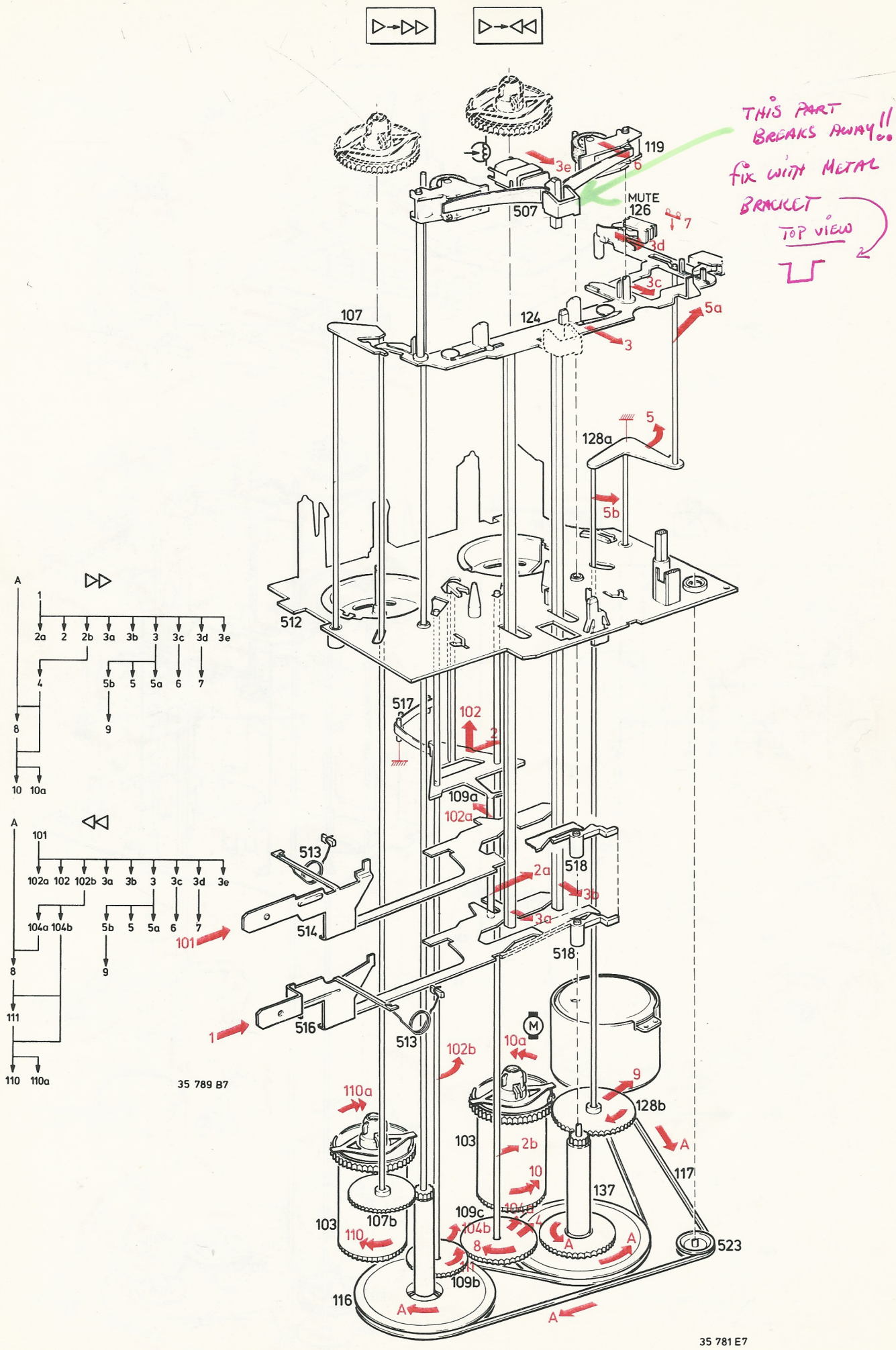
THIS PART BREAKS AWAY!!
fix WITH METAL BRACKET
TOP VIEW
119
3e
6
MUTE
126
7
507
3d
3c
107
124
5a
3
5
128a
5b
512
517
102
2
109a
102a
513
518
2a
3b
3a
514
101
518
516
513
1
102b
10a
M
9
128b
110a
103
2b
A
117
10
137
109c
104a
104b
4
107b
103
110
8
A
A
523
111
109b
116
A
A
35 781 E7
A
1
2a 2 2b 3a 3b 3 3c 3d 3e
4
5b 5 5a 6 7
8
9
10 10a
A
101
102a 102 102b 3a 3b 3 3c 3d 3e
104a 104b
5b 5 5a 6 7
8
9
111
110 110a
35 789 B7

Fig. 5

BELT 117, FLY WHEELS 116, 137, COG WHEEL 107

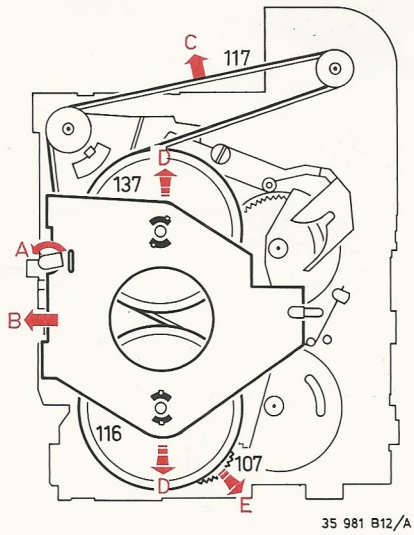

Fig. 6

PRESSURE ROLLER 119, HEAD 122

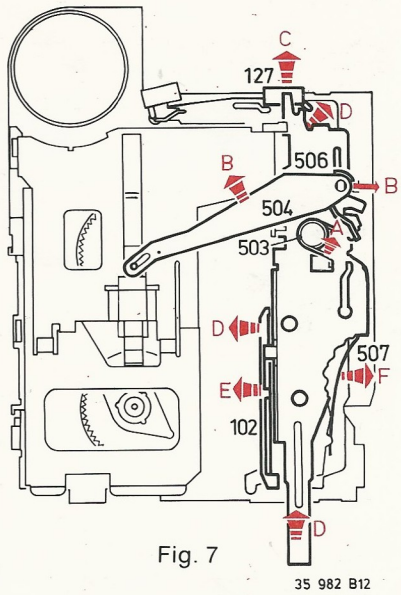

Fig. 7

HEAD BRACKET 124

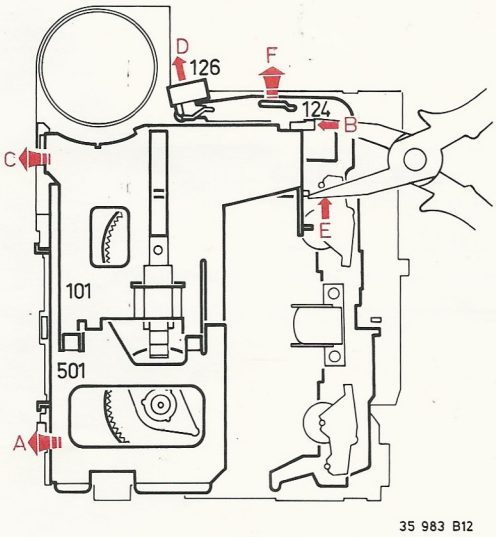

Fig. 8

CLUTCH 103

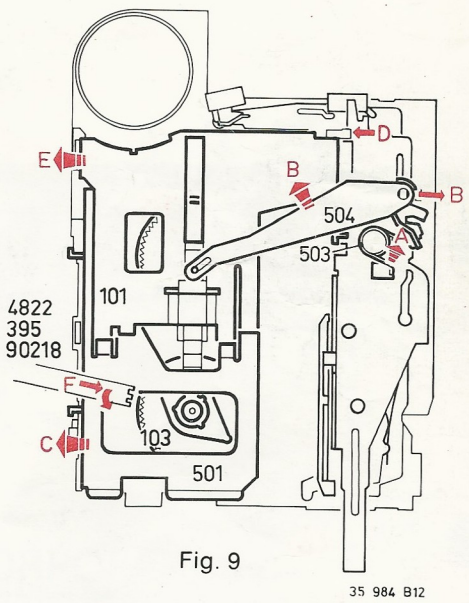

Fig. 9

COG WHEELS 109, 128

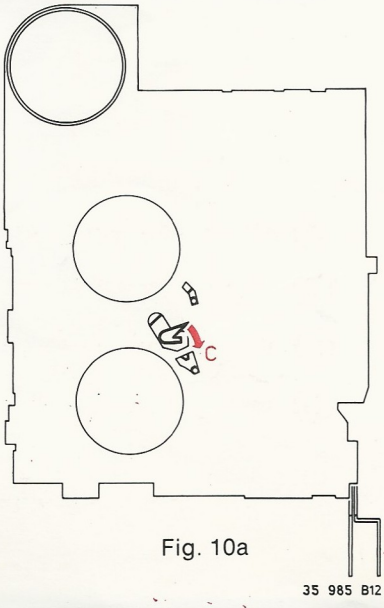

Fig. 10a

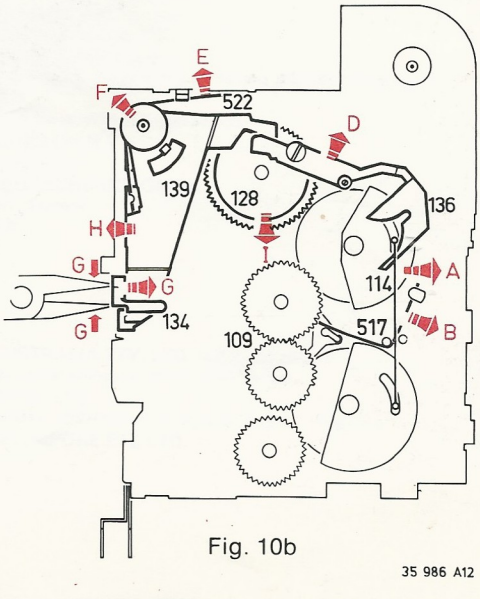

Fig. 10b

A	4822 390 20117
B	4822 390 10069
C	4822 390 20013
D	4822 390 20116
101	4822 466 81479
102	4822 462 30242
103	4822 466 70526
104	4822 466 70527
107	4822 522 20325
109	4822 522 20327
113	4822 520 30406
114	4822 492 90076
116	4822 528 80985
117	4822 358 30405
118	4822 520 30407
119	4822 403 40157
122	4822 249 30087
123	4822 528 80983
124	4822 459 80209
126	4822 277 10749
127	4822 277 10748
128	4822 522 20326
131	4822 276 11291
132	4822 361 20487
134	4822 403 10225
136	4822 403 52031
137	4822 528 80984
139	4822 403 52029
149	4822 404 20568
150	4822 492 41275
166	4822 404 20593
167	4822 404 20585
171	4822 404 20594
172	4822 492 63216

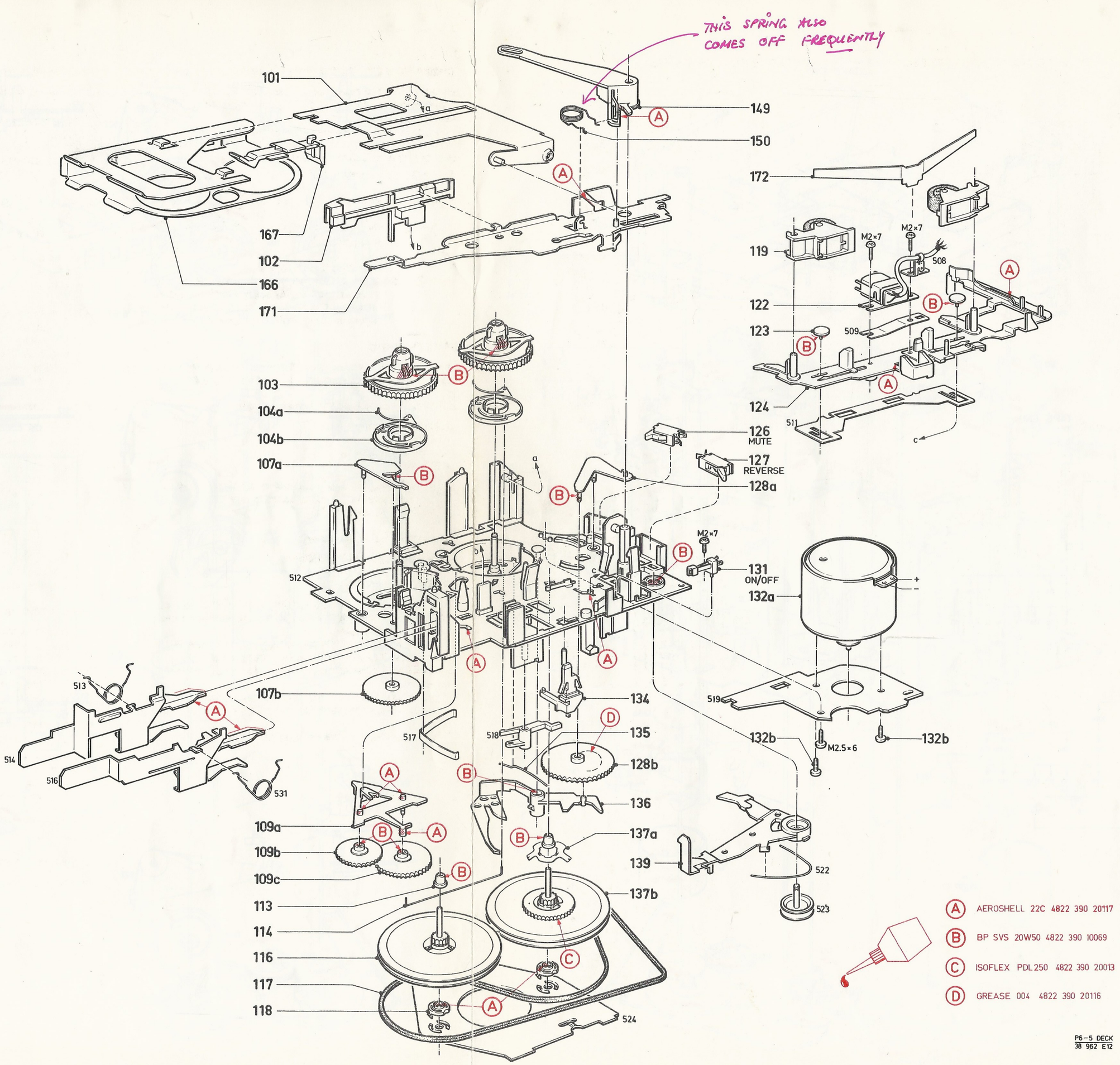

P6-5 DECK
38 962 E12

Service
Service
Service Information

1986 - 10-22

Auto Cassette Deck P6-0
P6-4

86-001

All P6 are the same except for the following variations :-

P6 version 0

P6 version 4

A 4822 390 10069

B 4822 390 20027