Service
Service
Service

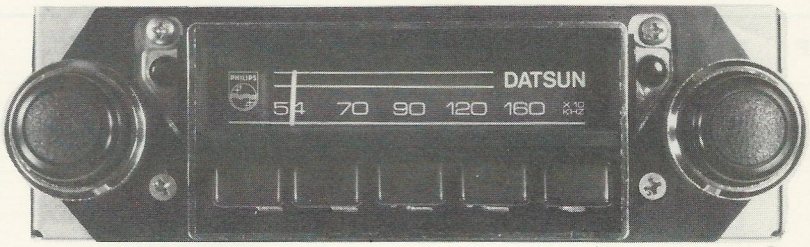

Service Manual

12 V

SPECIFICATIONS

Tuning Range	530 to 1605kHz
Intermediate Frequency	455kHz
Power Output	3 watts (T.H.D. 10%)
Speaker Impedance	4 ohms
Semiconductors	2 IC's
Voltage	12v Negative to Earth
Current	210mA (No signal)

BLOCK DIAGRAM

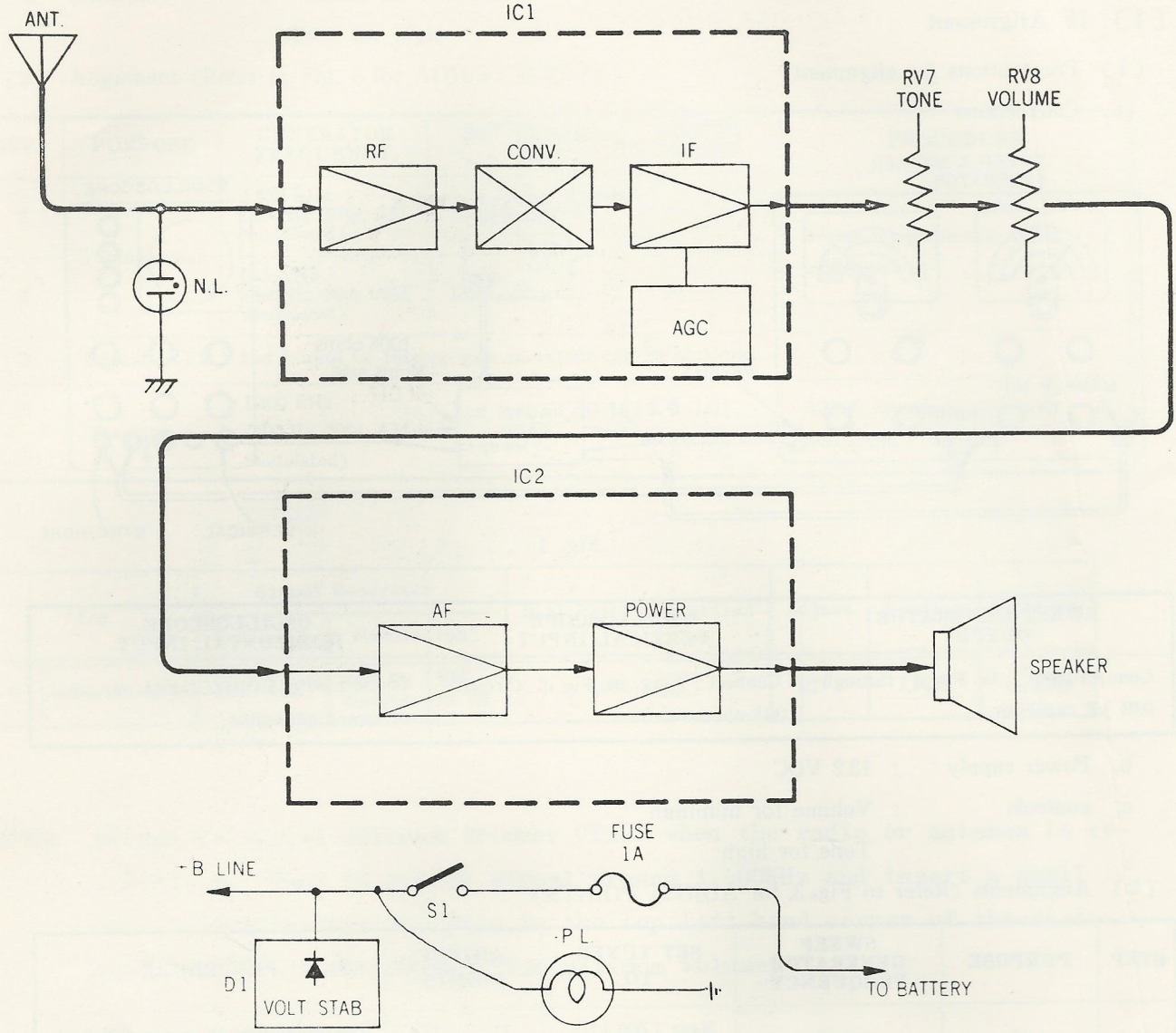

REPLACEMENT PARTS LIST

CT101	Antenna Trimmer	4802 125 67037
CT102) CT103)	Trimmer 50pF	4802 125 57052
RT1	Pot. Semi Variable 2Kohm	4802 100 10029
RV7) RV8)	Pot 50Kohm	4802 102 27074
IC1	HA1199	4802 209 87122
IC2	HA1306W	4802 209 87003
T1	AM IF	4802 153 17182
T2	AM IF	4802 156 17047
T3	AM IF	4802 153 17183
L1	Choke	4802 157 57057
L4	Oscillator	4802 156 37015
L5	Choke	4802 157 57074
L7	Choke	4802 156 37024

Knob (front)	4802 413 47134
Knob (rear)	4802 413 47133
Escutcheon (hot stamped)	4802 459 57031
Dial Scale (printed)	4802 331 37031
Rivet (nylon)	4802 535 37019
Speaker 4ohm 7" x 5"	4802 240 27031
Tuner	4802 210 17084
Antenna Socket	4802 267 17011
Fuse	4802 253 47004
Neon Lamp	4822 134 20016
Lamp	4802 134 47017
Power Unit (6 pin)	4802 214 57085
Power Unit (3 pin)	Order by description

ALIGNMENT

〔1〕 IF Alignment

(1) Preparations for alignment

a. Connections

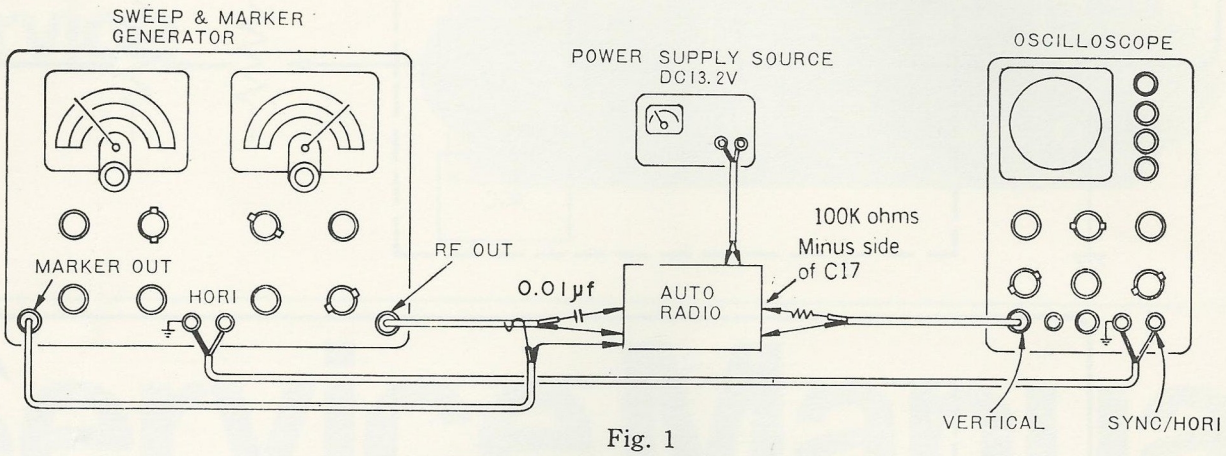

Fig. 1

SWEEP GENERATOR OUTPUT	OSCILLOSCOPE VERTICAL INPUT	OSCILLOSCOPE HORIZONTAL INPUT
Connect TP1 in Fig. 4. through 0.01 μF capacitor	Connect TP2 in Fig. 4. through 100k-ohm resistor	Connect with HORIZONTAL terminal of sweep generator

b. Power supply : 13.2 VDC

c. controls : Volume for minimun
Tone for high

(2) Alignments (Refer to Fig. 3. for ADJUST POINTS.)

STEP	PURPOSE	SWEEP GENERATOR FREQUENCY	SET TUNER TO	ADJUST POINTS	PROCEDURE
1	IF	455 kHz	Near 1,000 kHz no signal exists	T1 T2 T3	Get maximum IF curve and best symmetry on both sides.
2	Repeat STEP 1 until no further gain in output can be obtained.				

〔2〕 Tracking Alignment

(1) Preparations for alignment

a. Connections

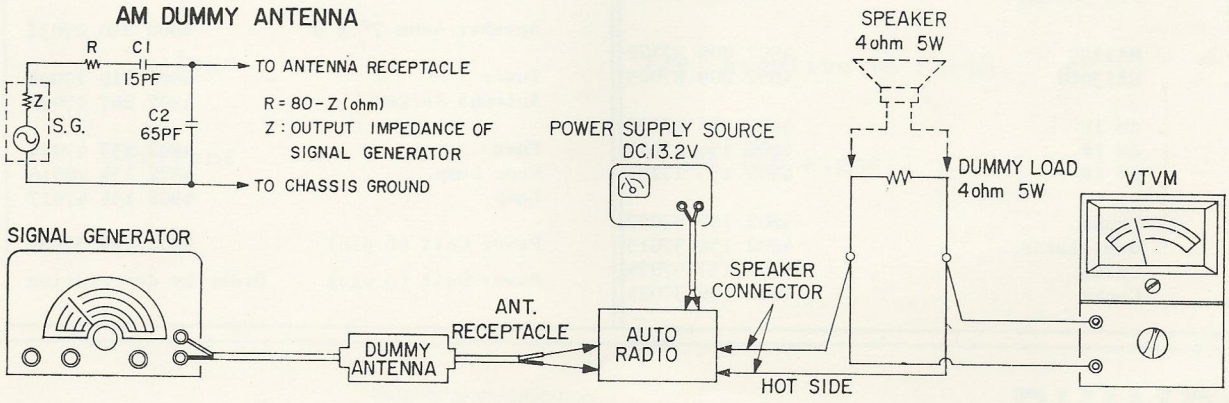

b. Power supply : 13.2 VDC

c. Controls : Volume for maximum

Tone for high

(2) Alignment (Refer to Fig. 6 for ADJUST POINTS.)

STEP	PURPOSE	GENERATOR FREQUENCY	SET TUNER TO	ADJUST POINTS	PROCEDURE
1	Tuning range	1,630 kHz (400 Hz, 30%, AM modulated)	High-end stop	CT 103	Adjust for maximum meter indication.
2		515 kHz (400 Hz, 30%, AM modulated)	Low-end stop	L 4	
3	Repeat STEP 1 and 2 until no further gain in output can be obtained.				
4	Tracking	1,400 kHz (400 Hz, 30%, AM modulated)	Just tune in SG frequency	CT 101	Adjust for maximum meter indication.
5				CT 102	

Item		Signal Generator		Dial Pointer Position	Adjust	Reading	Remarks
		Frequency	Modulation				
6	Sensitivity	1000 kHz	400 Hz 30% Output: 12 dB	1000 kHz	RT 1	1.41V	———

NOTE: Always re-adjust antenna trimmer CT101 when the radio or antenna is re-installed. Tune in a weak signal around 1,400KHz and insert a small screwdriver through the hole in the top left hand corner of the dial scale to adjust the trimmer for maximum volume.

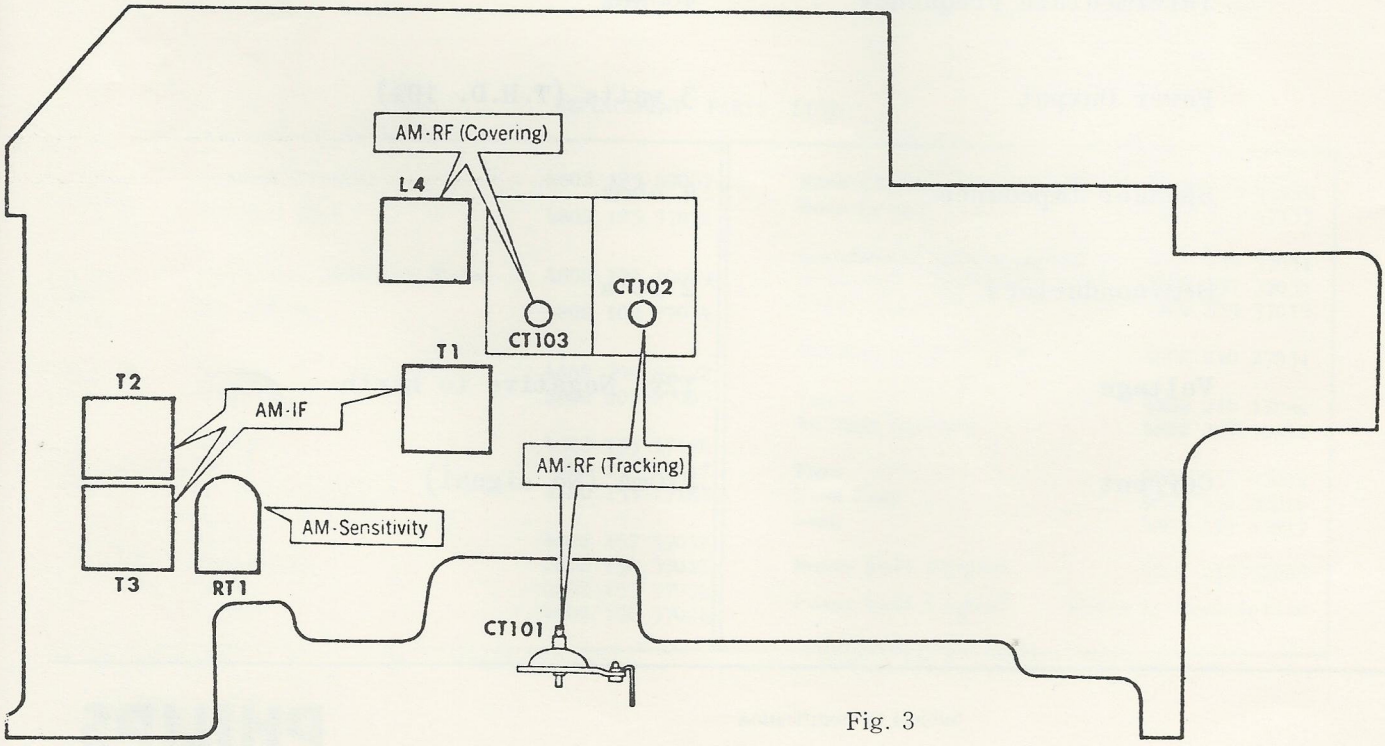

Fig. 3

CIRCUIT BOARD DIAGRAM

: EARTH : SIGNAL, +B

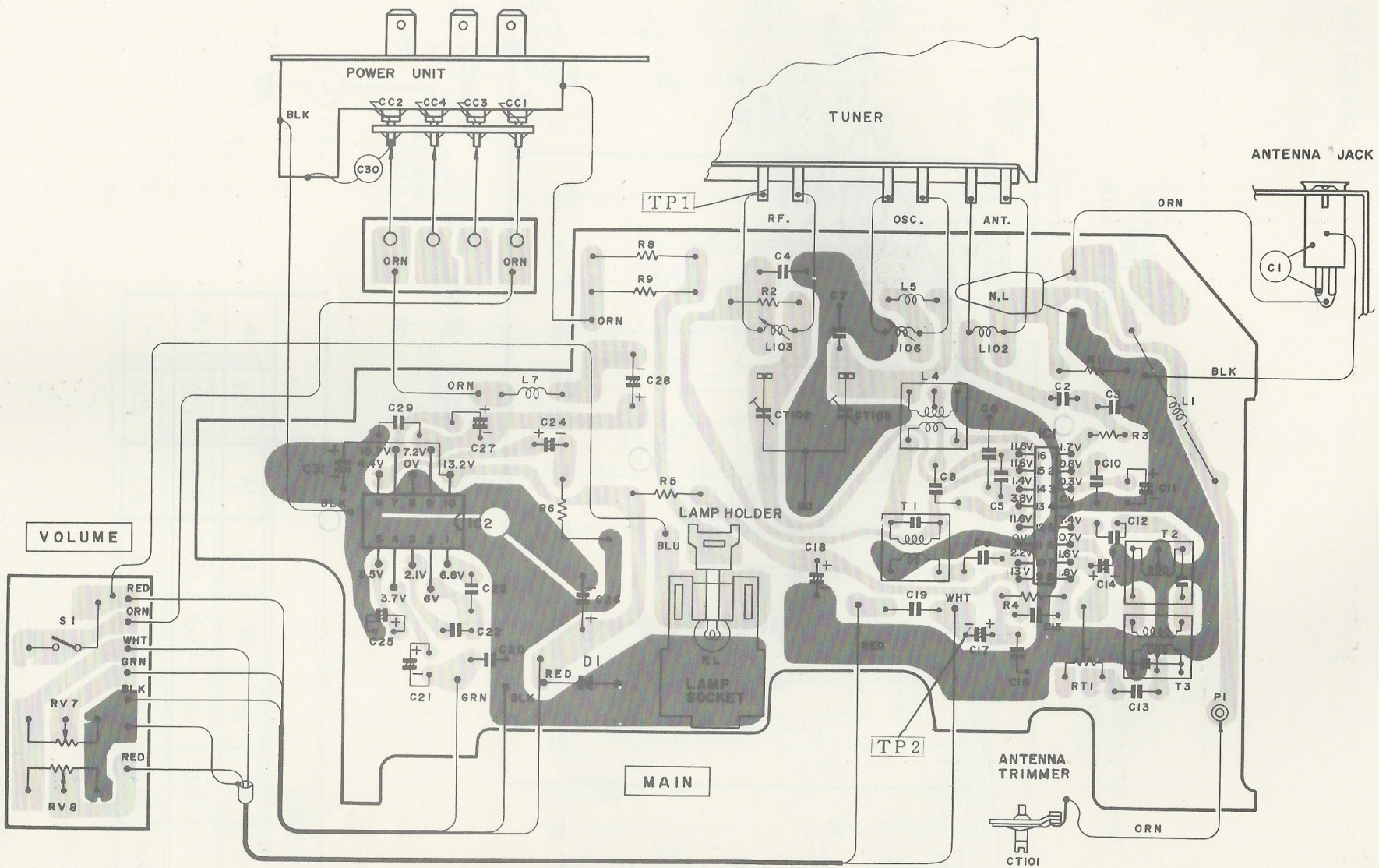

FIG 4

DISASSEMBLY

1. Removal of upper cover

1-1.

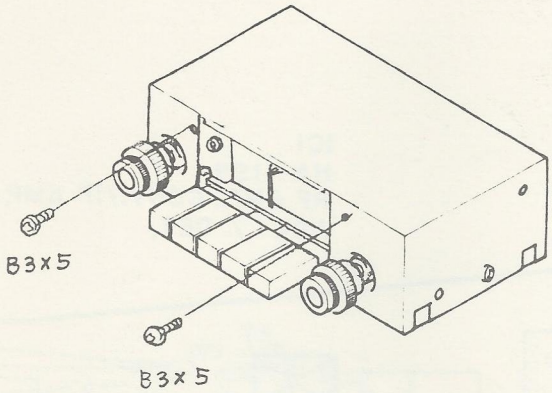

1-2.

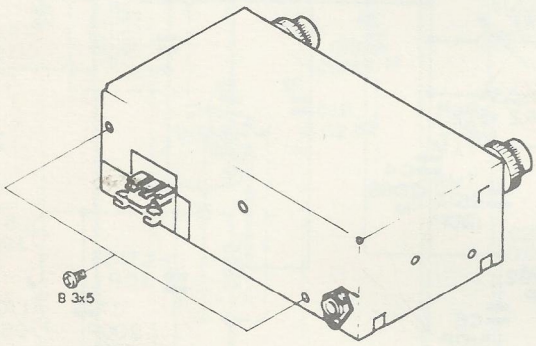

1-3.

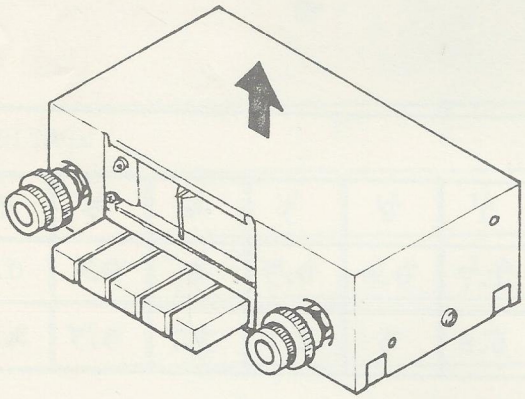

2. Removal of Cylindric Ceramic Capacitor

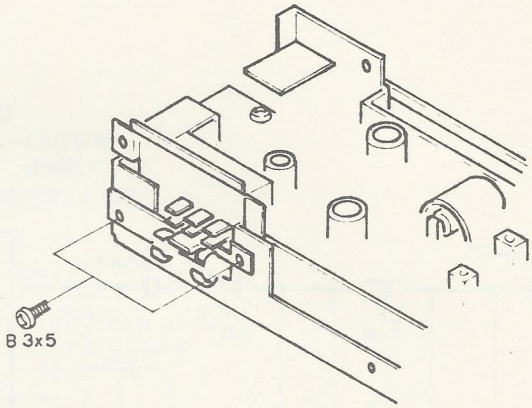

3. Removal of main P.C.B.

3-1.

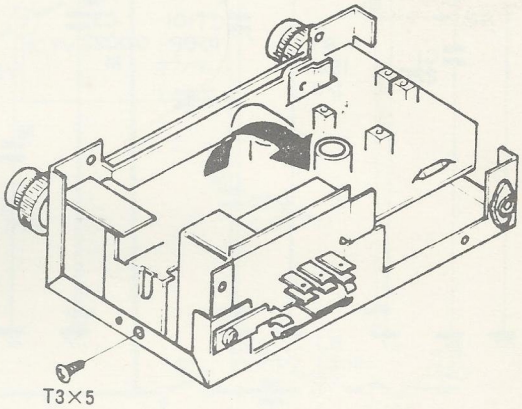

3-2.

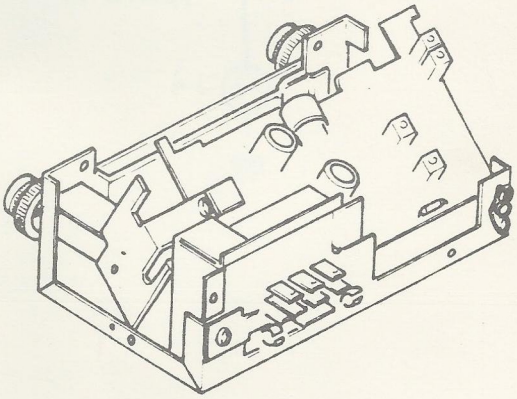

NOTE: The only difference between OP59A and OP59B is in the power/speaker outlet located at the rear of the set.

OP59A has a 6 pin outlet.

OP59B has a 3 pin outlet.

In all other respects the sets are identical.

SCHEMATIC DIAGRAM

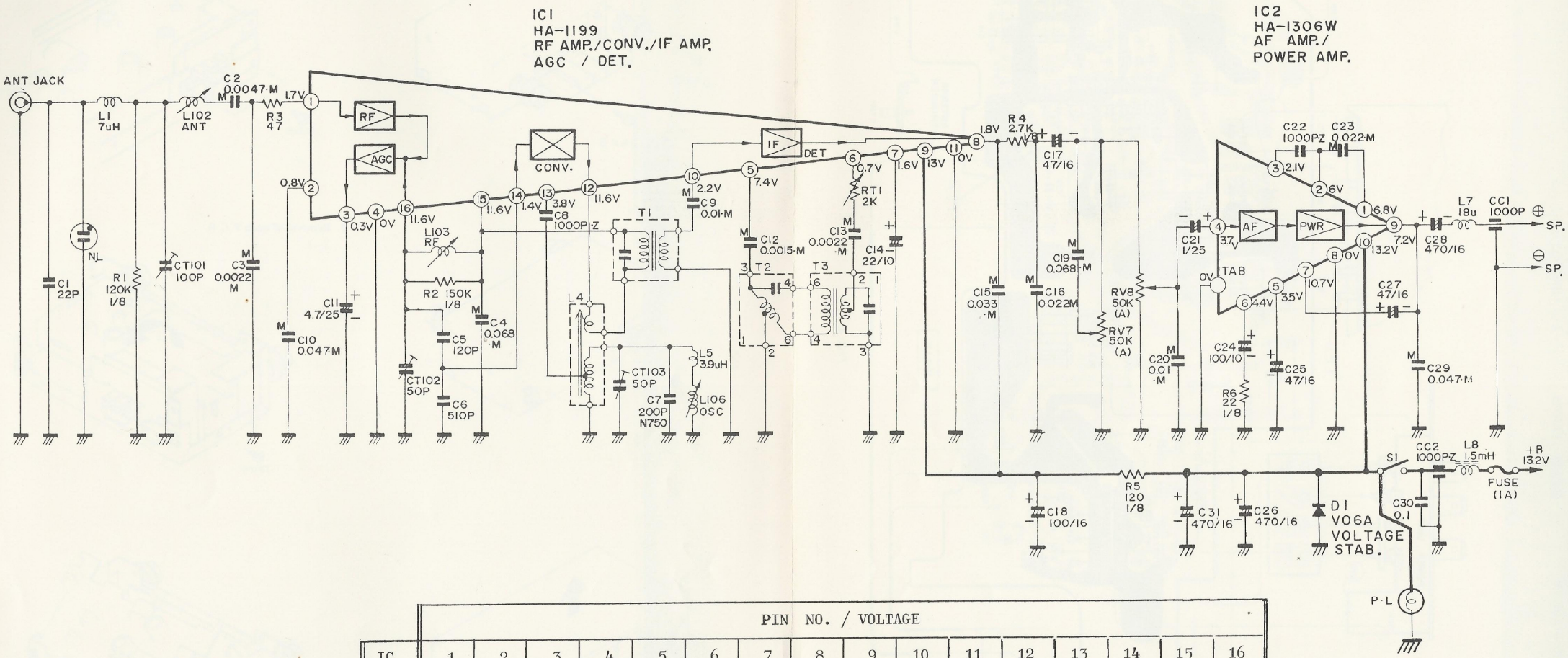

IC	PIN NO. / VOLTAGE															
	1	2	3	4	5	6	7	8	9	10	11	12	13	14	15	16
IC1	1.7	0.8	0.3	0	7.4	0.7	1.6	1.8	13	2.2	0	11.6	3.8	1.4	11.6	11.6
IC2	6.8	6	2.1	3.7	3.5	4.4	10.7	0	7.2	13.2	-	-	-	-	-	-

NOTE:

a) All voltages are measured at the base of the chassis with no signal and the volume control set at minimum.

b) All resistors and condensers are standard values and tolerances unless specified otherwise.