AM CAR RADIO OP51A

Service
Service
Service

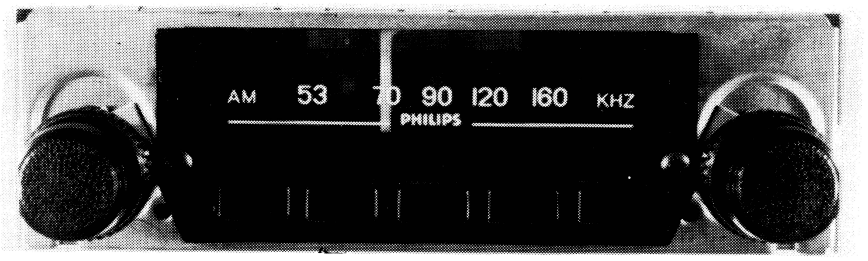

12 V

Service Manual

PRODUCED FOR AUSTRALIAN MOTOR INDUSTRIES LTD FOR FITMENT TO:

TOYOTA COROLLA 1977 MODEL

SPECIFICATIONS

Tuning Range	525 to 1605 KHz
Intermediate Frequency	455 KHz
Sensitivity	26dB or better (at 0.5 Watt Output)
Power Output	3 Watts Min Rms (at T.H.D.) = 10%
Electrical Fidelity	–3 dB or better at 100 Hz
	–18dB or better at 4 Hz
Speaker Impedance	4 ohms
IC.s	2 IC.s
Voltage	13.2 VDC Negative to Earth
Current	Max. 0.3 amp.

WARNING

Connect Power Lead of Receiver to Positive Battery Terminal only. Receiver will be damaged if connected to incorrect polarity.

PHILIPS

Subject to modification
4802 725 17011
Printed in Australia

PHILIPS

REPLACEMENT PARTS LIST

REF. NO.			DESCRIPTION	PART NO.
CAPACITORS				
C2	30ρF	50V	Ceramic	4802 122 47048
C3, 15, 24	.01μF	25V	Ceramic	4822 122 30043
C4, 26, 27, 30	.0022μ F	50V	Ceramic	4822 122 30114
C5	50ρF		Trimmer	4802 125 57042
C6, 18	.047μF	25V	Ceramic	4802 122 47054
C7, 22, 28	4.7μF	25V	Electrolytic	4802 124 47034
C8	120ρF	50V	Ceramic	4822 122 30093
C9	.001μF	50V	Ceramic	4802 122 47022
C10	.1μF	50V	Mylar	4802 121 47134
C11	22μF	16V	Electrolytic	4802 124 47021
C12	200ρF	50V	Ceramic	4802 122 47047
C13	.001μF	50V	Styrol	4802 121 57032
C14	50ρF	Osc.	Trimmer	4802 125 57038
C16	6ρF	50V	Ceramic	4822 120 21048
C17, 35	470μF	16V	Electrolytic	4802 124 47093
C19	100μF	10V	Electrolytic	4802 124 47002
C20, 36	.022μF	50V	Mylar	4802 121 47163
C21	200ρF	50V	Ceramic	4802 122 47047
C23	2ρF	50V	Ceramic	4822 120 21035
C25	.1μF	12V	Ceramic	4802 122 47055
C29	100ρF	10V	Electrolytic	4802 124 47002
C31	47μF	16V	Electrolytic	4802 124 47025
C32	.047μF	50V	Ceramic	4822 121 41152
C33	33μF	10V	Electrolytic	4802 124 47013
C34	.1μF	100V	Mylar	4802 121 47134
RESISTORS AND CONTROLS				
Note:	All Resistors are standard values and Tolerances unless specified otherwise.			
R9, R10, S1	Volume Control	10K		
	Tone Control	10K		4802 102 27065
	On/Off Switch			

REF. NO.	DESCRIPTION	PART NO.
IC.s COILS AND TRANSFORMERS		
IC1	RF Conv. IF and Det.	4802 209 87122
IC2	Driver and Power Output	4802 209 87123
L1	Choke 6.2μH	4802 157 57046
L4	Choke, Filter 6.2μH	4802 158 17103
T1	Transformer, Osc.	4802 153 27016
T2, 3	Transformer, IF. 455 kHz	4802 153 17165
T4, 5	Transformer, IF. 455 kHz	4802 153 17166
Tuner	Pushbuttons Coil Assemblies Tuning Shaft/Trimmer	4802 210 17074
	Tuning Shaft/Trimmer	4802 528 77047
MISCELLANEOUS ELECTRICAL		
PL1	Dial Lamp	4802 134 47058
	Socket (PL1)	4802 255 27008
C37, 38	1000pf Feed Thru.	4802 122 77004
C39	.022μF 50V Ceramic	4802 122 47108
L6	Choke, Filter 2.7μH	4802 158 17076
L7	Choke, Filter 50μH	4802 158 17042
L8	Choke, Filter .74μH	4802 158 17077
MISCELLANEOUS		
	Dial Scale Printed	4802 331 27028
	Pointer	4802 450 87087
	Knob (Front)	4802 413 47131
	Knob (Rear)	4802 413 97138
	Speaker	4802 240 27031
	Baffle	4802 459 27095
	Gasket	4802 466 37001
	Nut (Potentiometer)	4802 505 17016
	Washer (Potentiometer)	4802 532 17014

AM ALIGNMENT

IF Alignment

Preparations

(1) Connection:

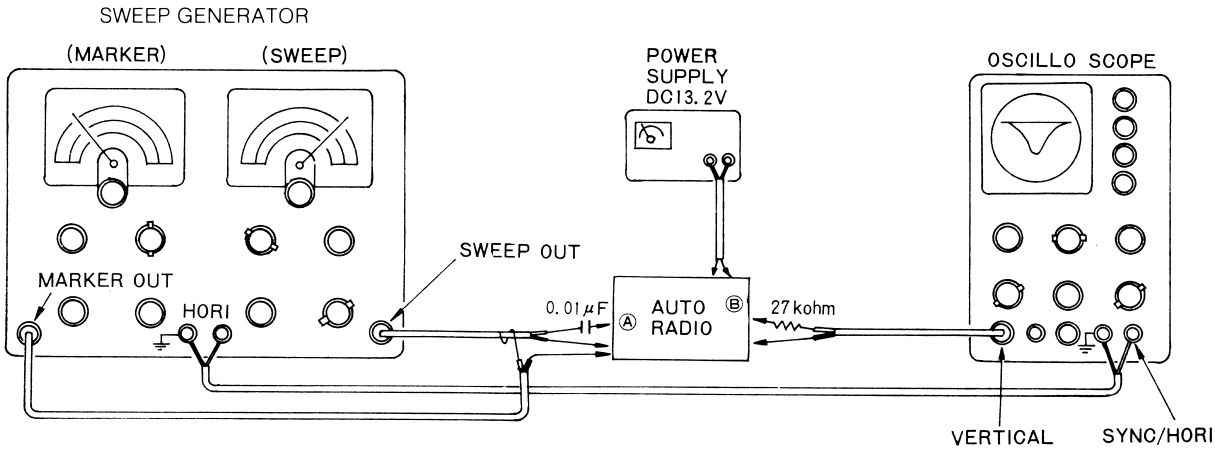

Fig. 3

(2) Controls: Volume for minimum, Tone for high

(3) Dial pointer: Place the pointer near to 1,000 kHz where no signal exists.

(4) Power supply: 13.2 VDC

Alignments (See Fig. 5)

STEP	ADJUST POINTS	ADJUST
1	$T_{2,3,4,5}$	Get waveform maximum and best symmetry.
2	Same as above	Repeat above adjustment two or three times.

Tuning range and Tracking Alignment

Preparations

(1) Connection:

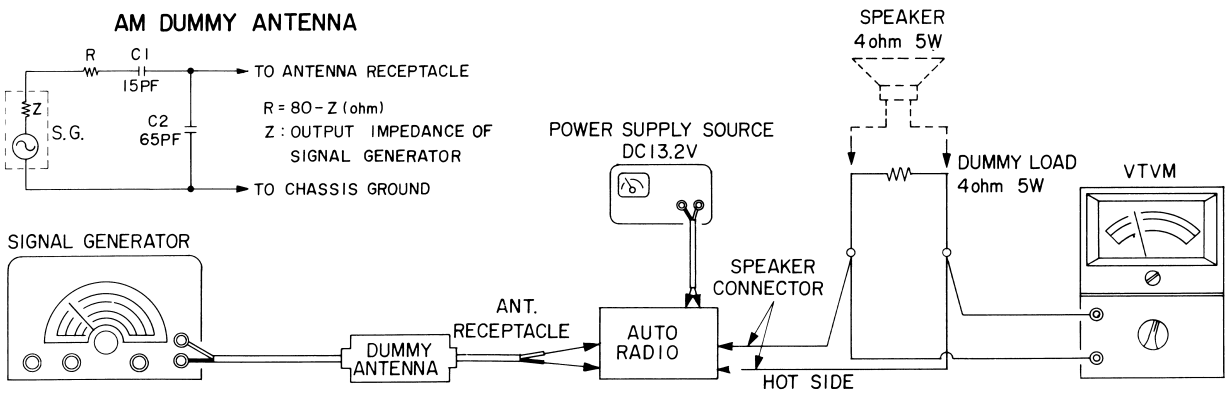

Fig. 4.

(2) Controls: Volume for maximum, Tone for high

(3) Power supply: 13.2 VDC

SCHEMATIC

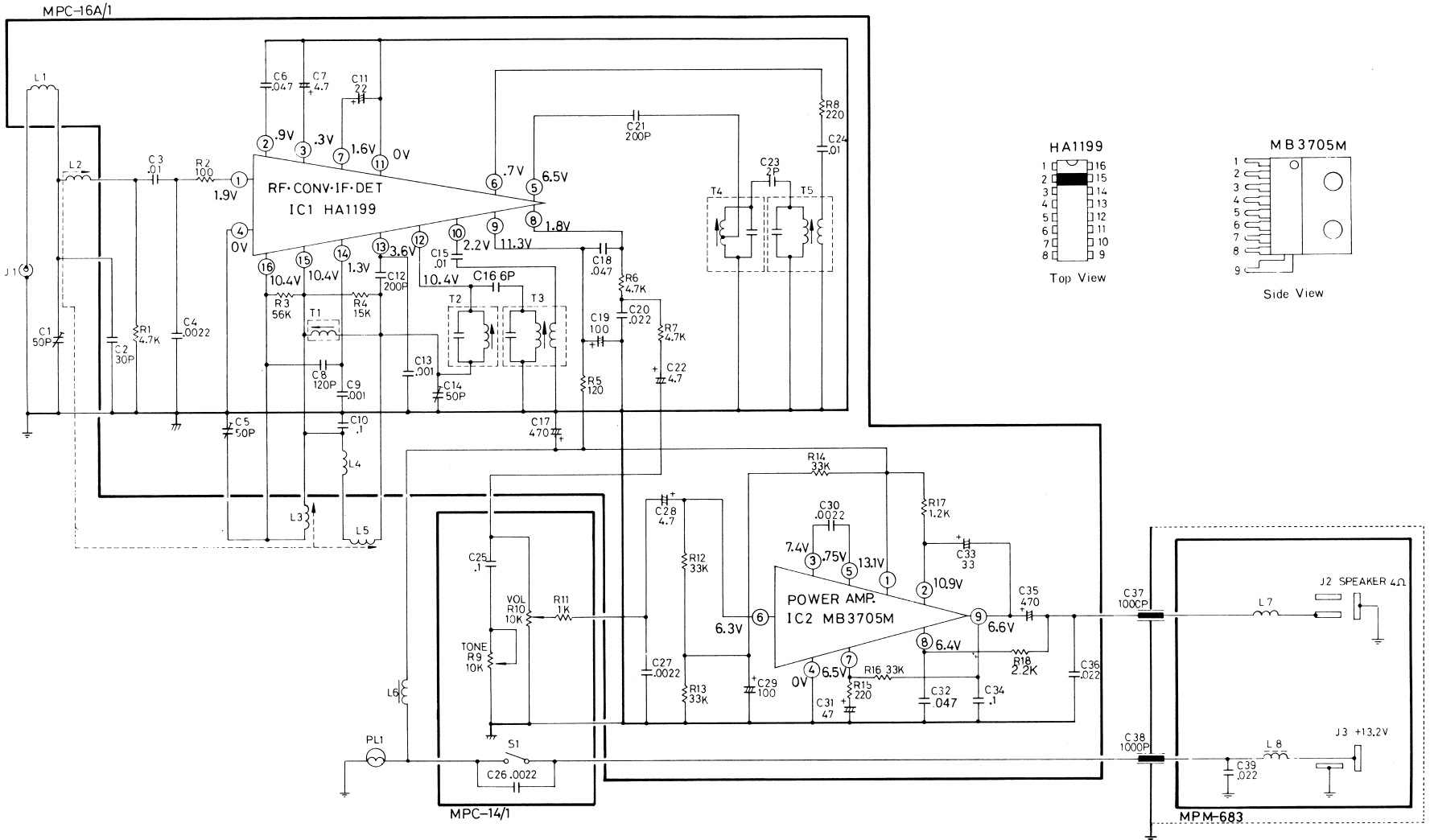

Fig. 1

NOTES: 1. All resistance in ohms, K=1,000

2. All capacitance in μF, P=$\mu\mu$F

3. DC voltages against the chassis measured with 100,000 ohm per volt meter, power supply set at +13.2 VDC, no signal input

WIRING ON PC BOARD

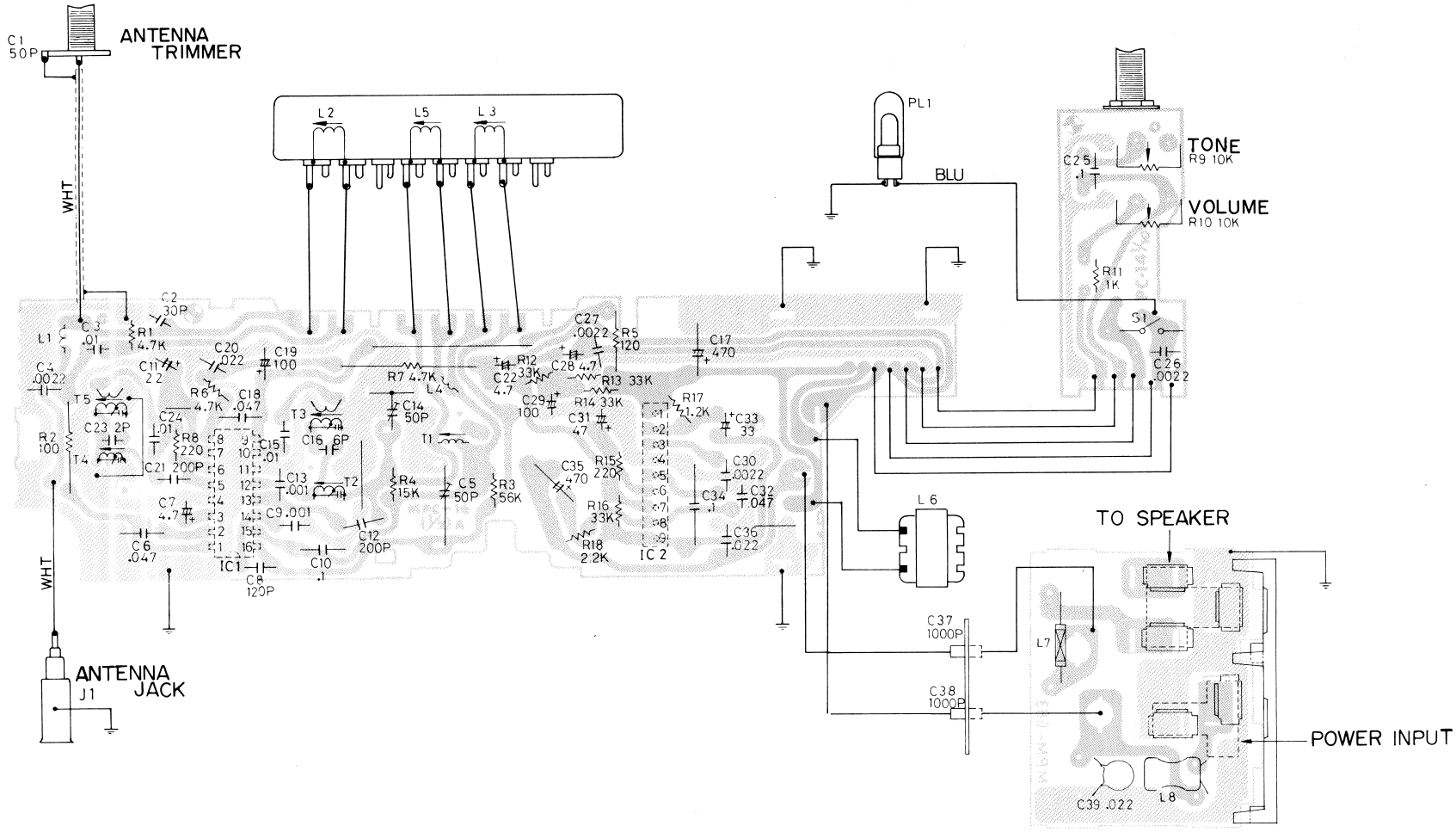

Fig. 2

Pin No.	IC 1
1	1.9V
2	.9V
3	.3V
4	0V
5	6.5V
6	.7V
7	1.6V
8	1.8V
9	11.3V
10	2.2V
11	0V
12	10.4V
13	3.6V
14	1.3V
15	10.4V
16	10.4V

Pin No.	IC 2
1	13.1V
2	10.9V
3	7.4V
4	0V
5	.75V
6	6.3V
7	6.5V
8	6.4V
9	6.6V

NOTES:
1. All resistance in ohms, K=1,000
2. All capacitance in μF, P=$\mu\mu$F
3. DC voltages against the chassis measured with 100,000 ohm per volt meter, power supply set at +13.2 VDC, no signal input
4. PC board (MPM-683) of line filter is shown components side view.

Alignments (See Fig. 5)

STEP	PROCEDURE	SSG FREQUENCY	DIAL POINTER	ADJUST
1	Tuning range	515 kHz	Low-end stop	Adjust T_1 to get output maximum.
2		1650 kHz	High-end stop	Adjust C_{14} to get output maximum.
3	Repeat STEP 1 and 2 three or four times until no further gain can be obtained.			
4	Tracking	1400 kHz	Tune in SSG frequency accurately	Adjust C_5 to get output maximum.
5				Adjust C_1 to get output maximum.

NOTE: Always re-adjust antenna trimmer C_1 to get maximum volume tuning in a weak signal near 1,400 kHz, when you install the radio in car or replace an antenna.

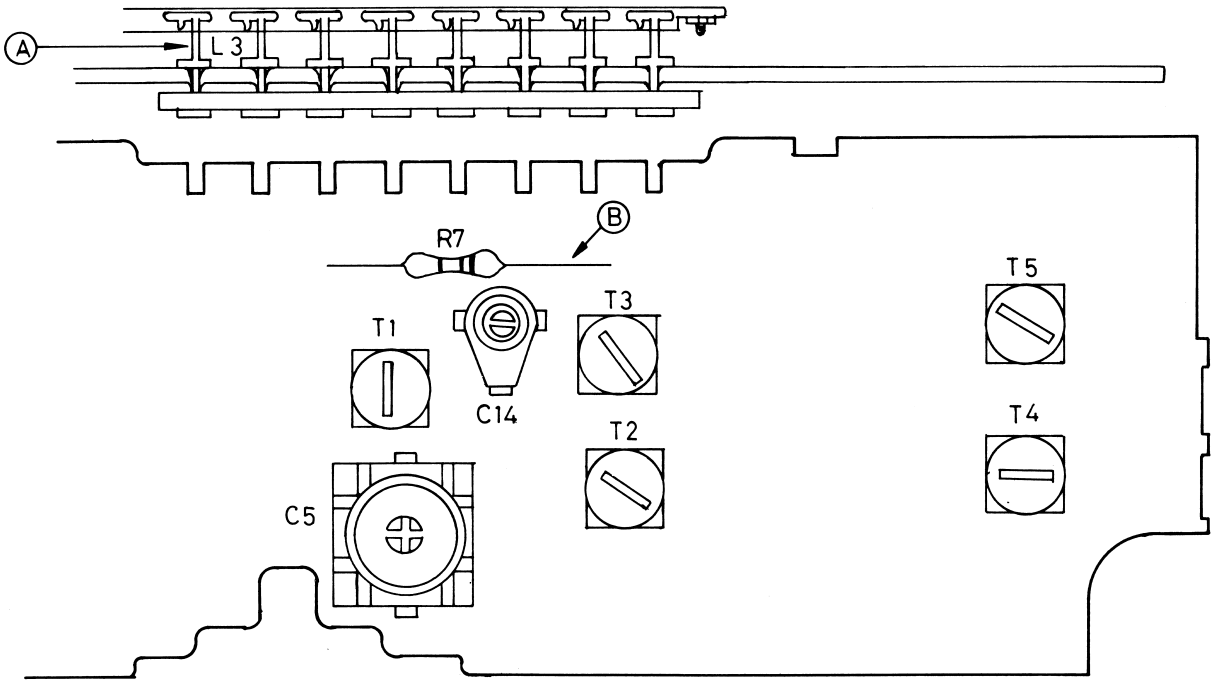

Fig. 5

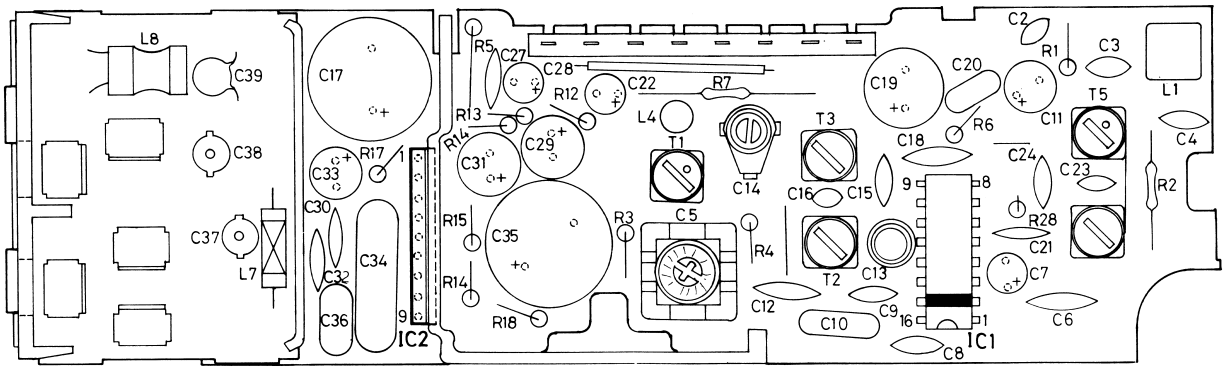

Fig. 6

WIRING ON PC BOARD

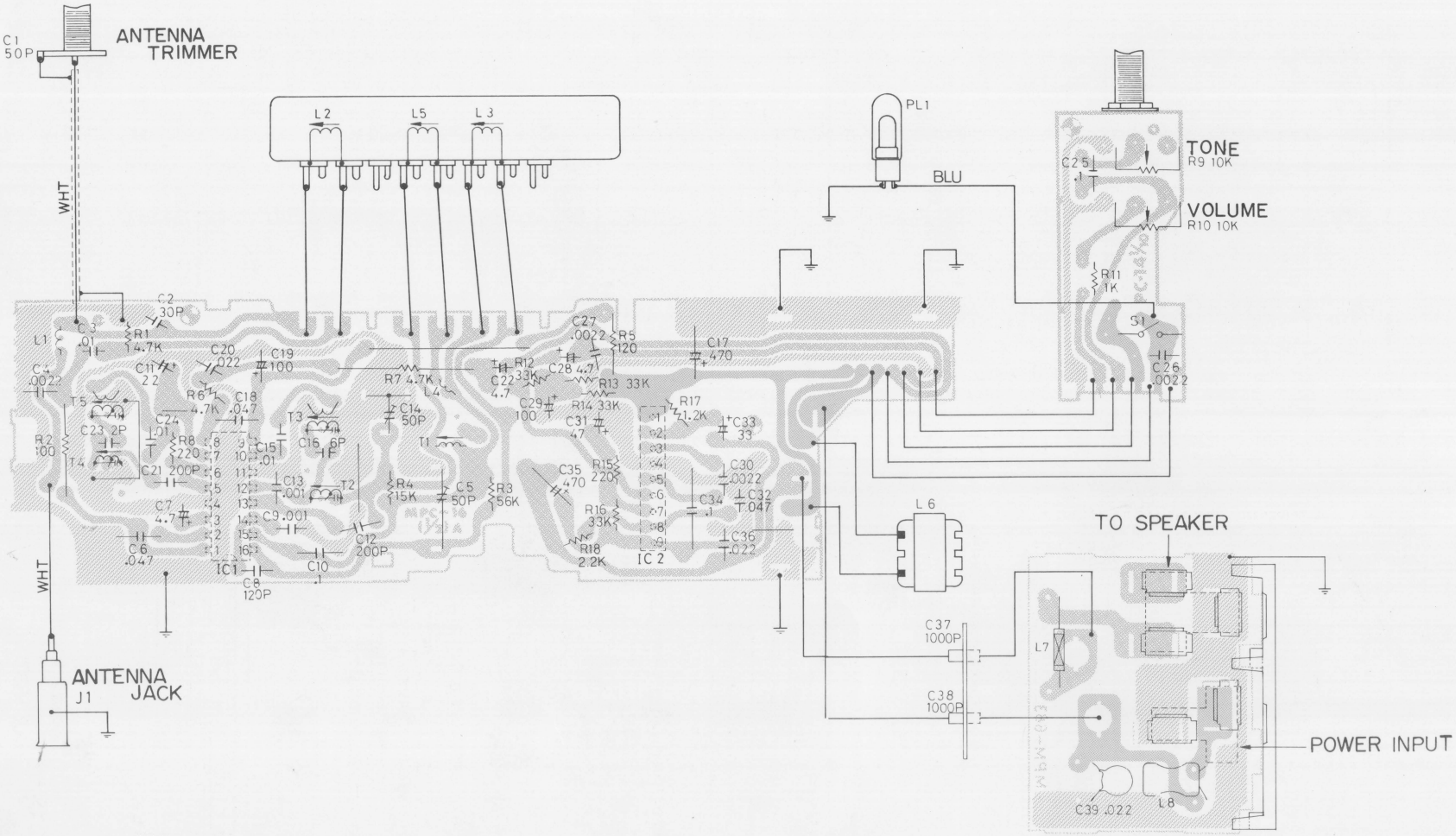

Fig. 2

Pin No.	IC 1
1	1.9V
2	.9V
3	.3V
4	0V
5	6.5V
6	.7V
7	1.6V
8	1.8V
9	11.3V
10	2.2V
11	0V
12	10.4V
13	3.6V
14	1.3V
15	10.4V
16	10.4V

Pin No.	IC 2
1	13.1V
2	10.9V
3	7.4V
4	0V
5	.75V
6	6.3V
7	6.5V
8	6.4V
9	6.6V

NOTES:

1. All resistance in ohms, K=1,000
2. All capacitance in μF, P=$\mu\mu$F
3. DC voltages against the chassis measured with 100,000 ohm per volt meter, power supply set at +13.2 VDC, no signal input
4. PC board (MPM-683) of line filter is shown components side view.