Service
Service
Service

Service Manual

12 V

SPECIFICATIONS

TUNING RANGE:	AM: 525~1605 kHz	FM: 88~108 MHz
INTERMEDIATE FREQUENCY:	AM: 455 kHz	FM: 10.7 MHz
SENSITIVITY:	AM: 26 dB or less	FM: 18dB or less
LIMITING SENSITIVITY:		FM: 10 ± 5 dB
SIGNAL TO NOISE RATIO:	AM: 21 dB or better (at 35 dB input) FM: 30 dB or better (at 18 dB input)	
ELECTRICAL FIDELITY:	AM: -4 ± 3 dB or better at 100 Hz -13 ± 5 dB or better at 4 kHz FM: 0 ± 3 dB or better at 100 Hz -15 ± 5 dB or better at 10 kHz	
SEPARATION:	25 dB or better (at 74 dB input)	
POWER OUTPUT:	4 watts or better (5 watts Max.)	
SPEAKER IMPEDANCE:	4 ohm, per channel	
POWER INPUT:	12-volt car battery, negative terminal to ground	
voltage:	13.2 VDC	
current:	Approx. 0.55 amperes (at 0.5 watts output)	
SEMICONDUCTOR:	3 transistors, 1 FET, 8 ICs, 2 Diodes	
DIMENSIONS:	180(W) x 50(H) x 130(D)mm (7-3/32", 2-31/32", 5-1/8"	
WEIGHT:	Radio receiver 1.1kg (2.5lbs)	

Subject to modification
4802 725 17132
Printed in Australia

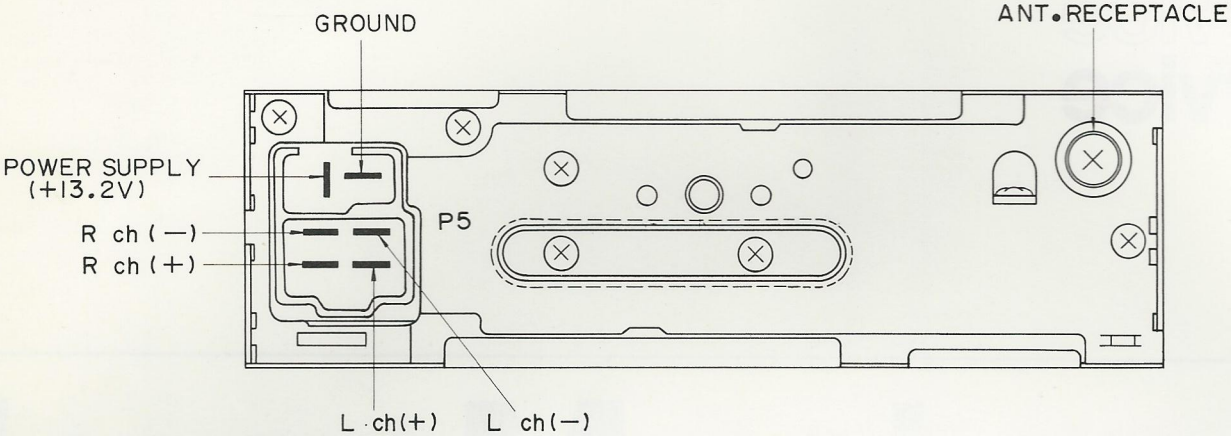

Fig 1

AM ALIGNMENT

* Standard adjustment condition

a. Power supply ..... 13.2 VDC

b. AM/FM changing switch ..... AM

c. Balance and tone control ..... Center

d. Volume ..... Adjust to get 1V output level.

[1] IF Alignment

(1) Connections

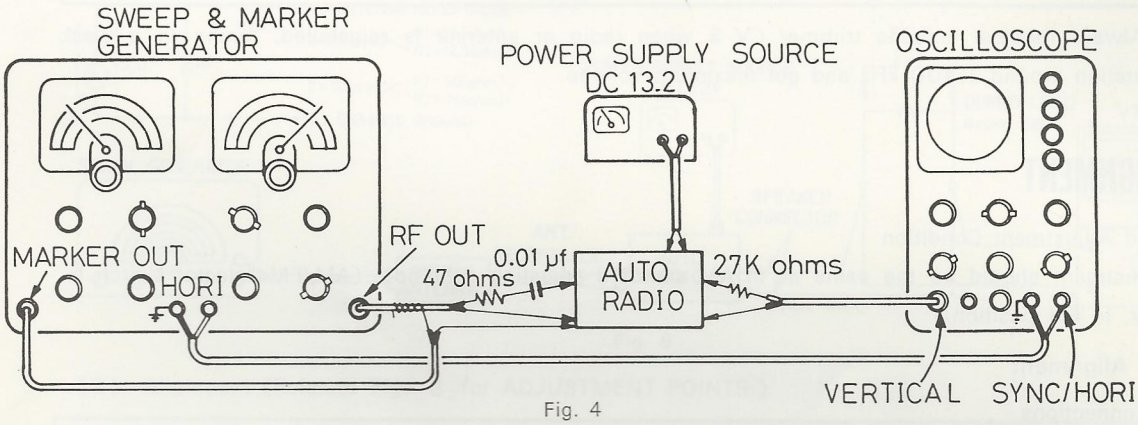

Fig. 4

SWEEP GENERATOR OUTPUT	OSCILLOSCOPE VERTICAL INPUT	OSCILLOSCOPE HORIZONTAL INPUT
Connect TP 1 in Fig. 9 through 0.01 μF capacitor & 47 ohm resistor	Connect TP 2 in Fig. 9 through 27k-ohm resistor	Connect with HORIZONTAL terminal of sweep generator

(2) Alignment (Refer to Fig. 9 for ADJUSTMENT POINTS.)

STEP	PURPOSE	SWEEP GENERATOR FREQUENCY	SET TUNER TO	ADJUSTMENT POINTS	PROCEDURE
1	IF	455 kHz	Near 1,000 kHz no signal exists	T 5	Get maximum IF curve and best symmetry on both sides.
2	Repeat STEP 1 until no further gain in output can be obtained.				

[2] Tracking Alignment

(1) Connections

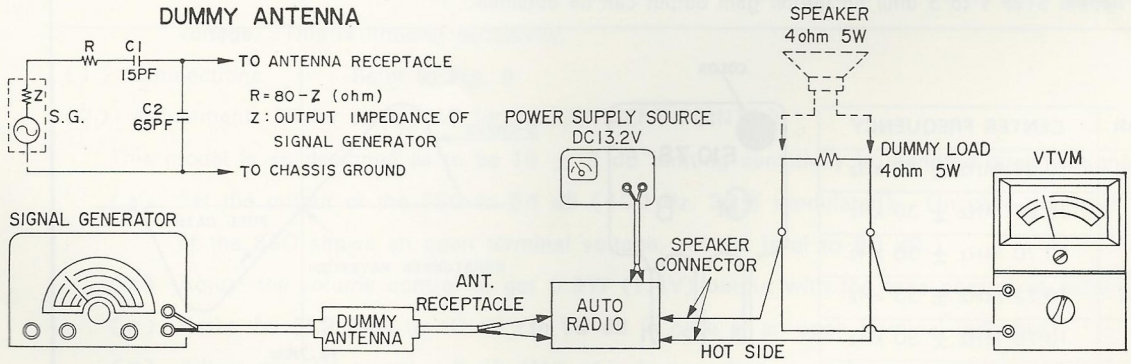

Fig. 5

(2) Alignment (Refer to Fig. 9 for ADJUSTMENT POINTS.)

STEP	PURPOSE	GENERATOR FREQUENCY	SET TUNER TO	ADJUSTMENT POINTS	PROCEDURE
1	Tuning range	1,635 kHz (400 Hz, 30% AM)	High-end stop	CV 5	Adjust for maximum meter indication.
2		505 kHz (400 Hz, 30% AM)	Low-end stop	T 4	
3	Repeat STEP 1 and 2 until no further gain in output can be obtained.				
4	Tracking	1,400 kHz (400 Hz, 30% AM)	Just tune in SG frequency	CV 4	Adjust for maximum meter indication.
5				CV 3	

NOTE: Always readjust antenna trimmer CV 3 when radio or antenna is reinstalled, tuning in a weak station around 1,400 kHz and get maximum volume.

FM ALIGNMENT

* Standard Adjustment Condition

FM adjustment should be the same as in AM standard adjusting condition, (AM/FM selector switch is, however, in FM position.)

[1] IF Alignment

(1) Connections

SWEEP GENERATOR OUTPUT	OSCILLOSCOPE VERTICAL INPUT	OSCILLOSCOPE HORIZONTAL INPUT
Connect TP 3 in Fig. 9 through 0.01 μF capacitor & 47 ohm resistor	Connect TP 4 in Fig. 9 through 27k-ohm resistor	Connect with HORIZONTAL terminal of sweep generator

(2) Alignment (Refer to Fig. 9 for ADJUSTMENT POINTS.)

STEP	PURPOSE	SWEEP GENERATOR FREQUENCY	SET TUNER TO	ADJUSTMENT POINTS	PROCEDURE
1	IF circuit	Center frequency varies according to the color of the ceramic filter (Refer to chart given below)	Near 98 MHz no signal exists	T 1	S-curve adjust for full gain and length of at linears. (See Fig. 7)
2					
3	Detector circuit			T 2	Keep S-curve straight at the center, and adjust waveform for best symmetry of S-curve against the axis as much as possible. (See Fig. 7)
4	Repeat STEP 1 to 3 until no further gain output can be obtained.				

COLOR	CENTER FREQUENCY
Black	10.64 MHz ± 30 kHz
Blue	10.67 MHz ± 30 kHz
Red	10.70 MHz ± 30 kHz
Orange	10.73 MHz ± 30 kHz
White	10.76 MHz ± 30 kHz

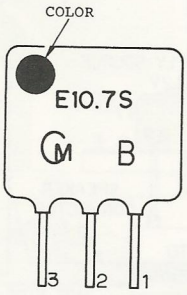

Fig. 6

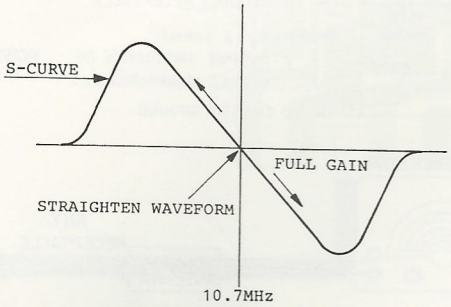

Fig. 7

NOTE: S curve center can be adjusted in the same manner by receiving local FM broadcast near 98.1 MHz.

◎Points to watch in replacing ceramic filter

In the FM circuit there are two ceramic filters. It is important that both filters have the same color. (i.e the same center frequency).

a. Readjustment is not necessary if a defective ceramic filter is replaced with one of the same color.

b. Both filters should be changed to the same color if one of them must be replaced with a different colored filter. Readjustment will be necessary because of the changed center frequency.

〔2〕 Tuning range alignment (Refer to Fig. 9 for ADJUSTMENT POINTS.)

(1) Connections

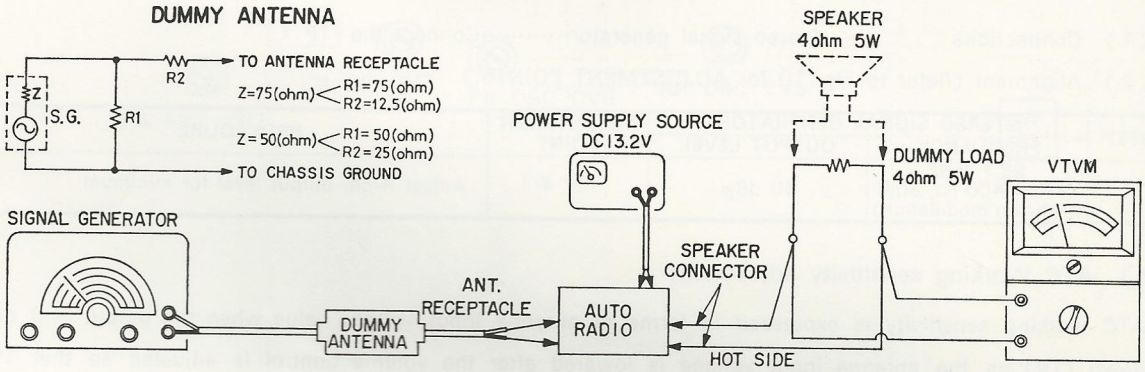

Fig. 8

(2) Alignment (Refer to Fig. 9 for ADJUSTMENT POINTS.)

STEP	PURPOSE	GENERATOR FREQUENCY	SET TUNER TO	ADJUSTMENT POINTS	PROCEDURE
1	Tuning range	87 MHz (400 Hz, 30% FM)	Low-end stop	CV 6	Adjust for maximum meter indication.
2		109.5 MHz (400 Hz, 30% FM)	High-end stop	—	106 MHz must be received.
3	Tracking	98 MHz (400 Hz, 30% FM)	Just tune in SG frequency	CV 1	Adjust for maximum meter indication.
4				CV 2	

〔3〕 Limiting Sensitivity

◎ Limiting sensitivity is defined as the antenna input voltage measured in the undermentioned procedure.

(a) Apply the antenna input voltage of 54 dB/μV to the receiver and adjust the volume control to get 0.5W output.

(b) Decrease the antenna input gradually so that the output gets 3 dB down, then read the input voltage. This is limiting sensitivity.

(1) Connections Refer to Fig. 8

(2) Adjustment (Refer to Fig. 10 for ADJUSTMENT POINTS.)

This model is so designed as to be 10 ± 3 dB limiting sensitivity in standard specifications.

(a) Set the output of the SSG to 54 dB (400 Hz, 30% modulated). (In case the level indicator of the SSG shows an open terminal voltage, set the level to 60 dB.)

(b) Adjust the volume control to get 0.5W (1.4V) output with the tone control at extreme treble.

(c) Reset the SSG level to 10 dB (to 16 dB in case of an open terminal indicator).

(d) Adjust the RV1 to get −3 dB (1V) of output reading.

NOTE: The receiver will not operate with the RV1 turned fully counterclockwise.

〔4〕 Noise blanker alignment

(1) Connections a. Stereo signal generator·····Connect the TP 1

b. Oscilloscope ·····Connect the TP 4

(2) Alignment (Refer to Fig. 9 for ADJUSTMENT POINTS.)

STEP	STEREO SIGNAL GENERATOR		ADJUSTMENT POINT	PROCEDURE
	FREQUENCY	OUTPUT LEVEL		
1	98.1 MHz (No modulation, Stereo mode)	60 dBμ	T 3	After making sure of "STEREO" display, adjust the pilot signal wave (19 kHz) for minimum.

〔5〕 Separation alignment

(1) Connections a. Stereo signal generator·····Connect the TP 1

(2) Alignment (Refer to Fig. 10 for ADJUSTMENT POINTS.)

STEP	STEREO SIGNAL GENERATOR		ADJUSTMENT POINT	PROCEDURE
	FREQUENCY	OUTPUT LEVEL		
1	98.1 MHz (L-ch: 400 Hz, 30% R-ch: no modulation)	60 dBμ	RV 4	Adjust R-ch. output level for minimum.

〔6〕 ATC Working sensitivity adjustment

ATC working sensitivity is expressed in terms of antenna input voltage value when the output is 3 dB down (1V) as the antenna input voltage is lowered after the volume control is adjusted so that 1V standard voltage may be obtained at 60 dBμ (10 kHz, 30% FM) specified antenna input voltage.

(1) Connections Same as separation alignment

(2) Alignment (Refer to Fig. 9 for ADJUSTMENT POINTS.)

STEP	SIGNAL GENERATOR		ADJUSTMENT POINTS	PROCEDURE
	FREQUENCY	OUTPUT LEVEL		
1	98.1 MHz (10 kHz, 30%)	60 dBμ	—	Adjust volume control until the output voltage is 1.4V.
2		46 dBμ (±4 dBμ)	RV 3	Adjust the output voltage for −3 dB (1V)

〔7〕 C/N Alignment

(1) Connections Same as in section 〔7〕

(2) Alignment (Refer to Fig. 9 for ADJUSTMENT POINTS.)

STEP	SIGNAL GENERATOR		ADJUSTMENT POINTS	PROCEDURE
	FREQUENCY	OUTPUT LEVEL		
1	98.1 MHz (400 Hz, 30%)	60 dBμ	—	Adjust volume control so that the output voltage may be 1V.
2	Disconnect the signal generator		RV 2	Adjust the output voltage (residual noise) for 32mV.

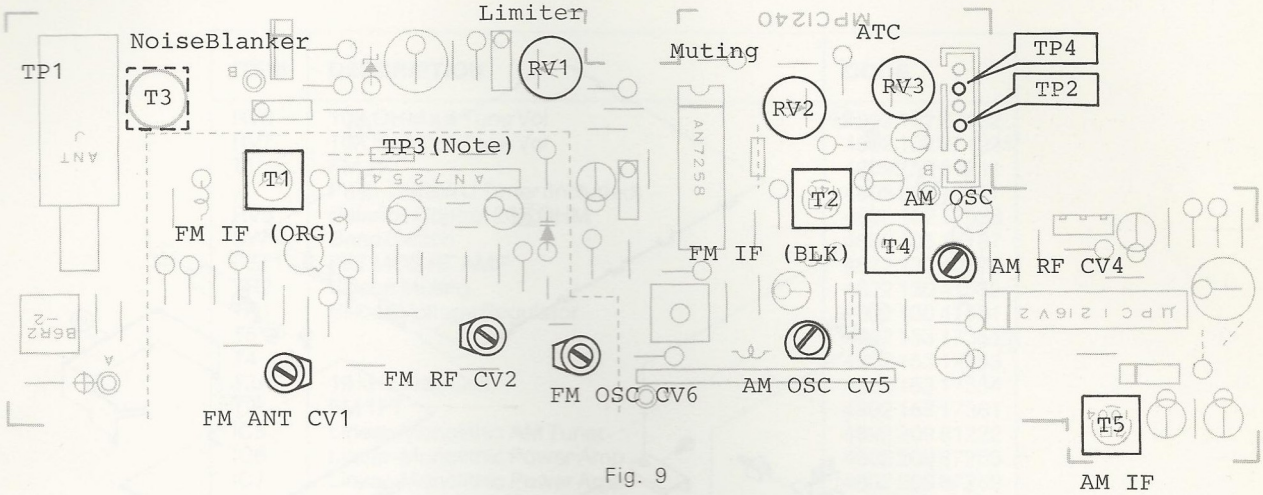
Limiter
NoiseBlanker
TP1
T3
RV1
Muting
ATC
TP4
TP2
RV3
RV2
TP3(Note)
T1
T2
AM OSC
FM IF (ORG)
FM IF (BLK)
T4
AM RF CV4
FM RF CV2
FM OSC CV6
AM OSC CV5
FM ANT CV1
T5
AM IF

Fig. 9

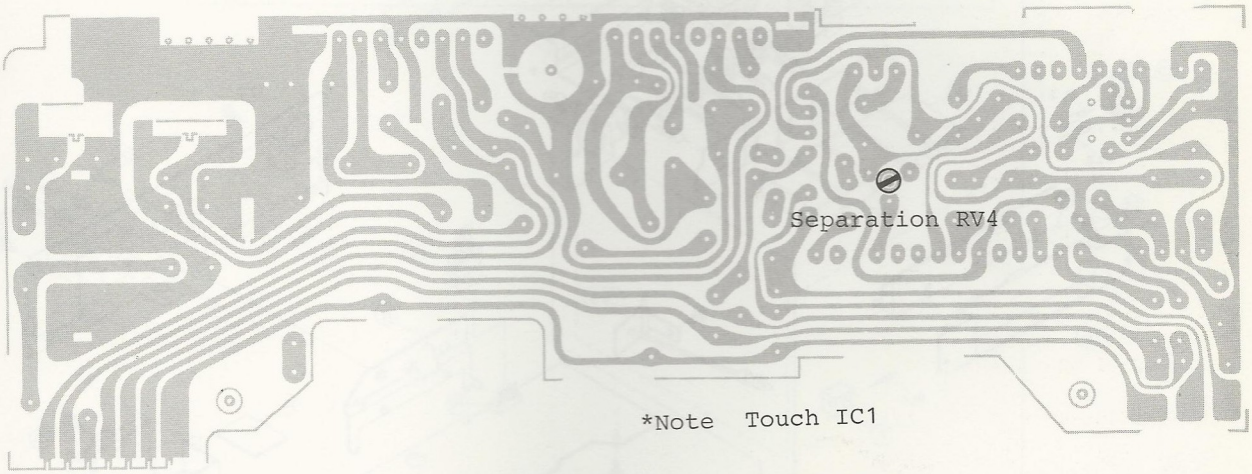
Separation RV4
*Note Touch IC1

Fig. 10

EXPLODED VIEW

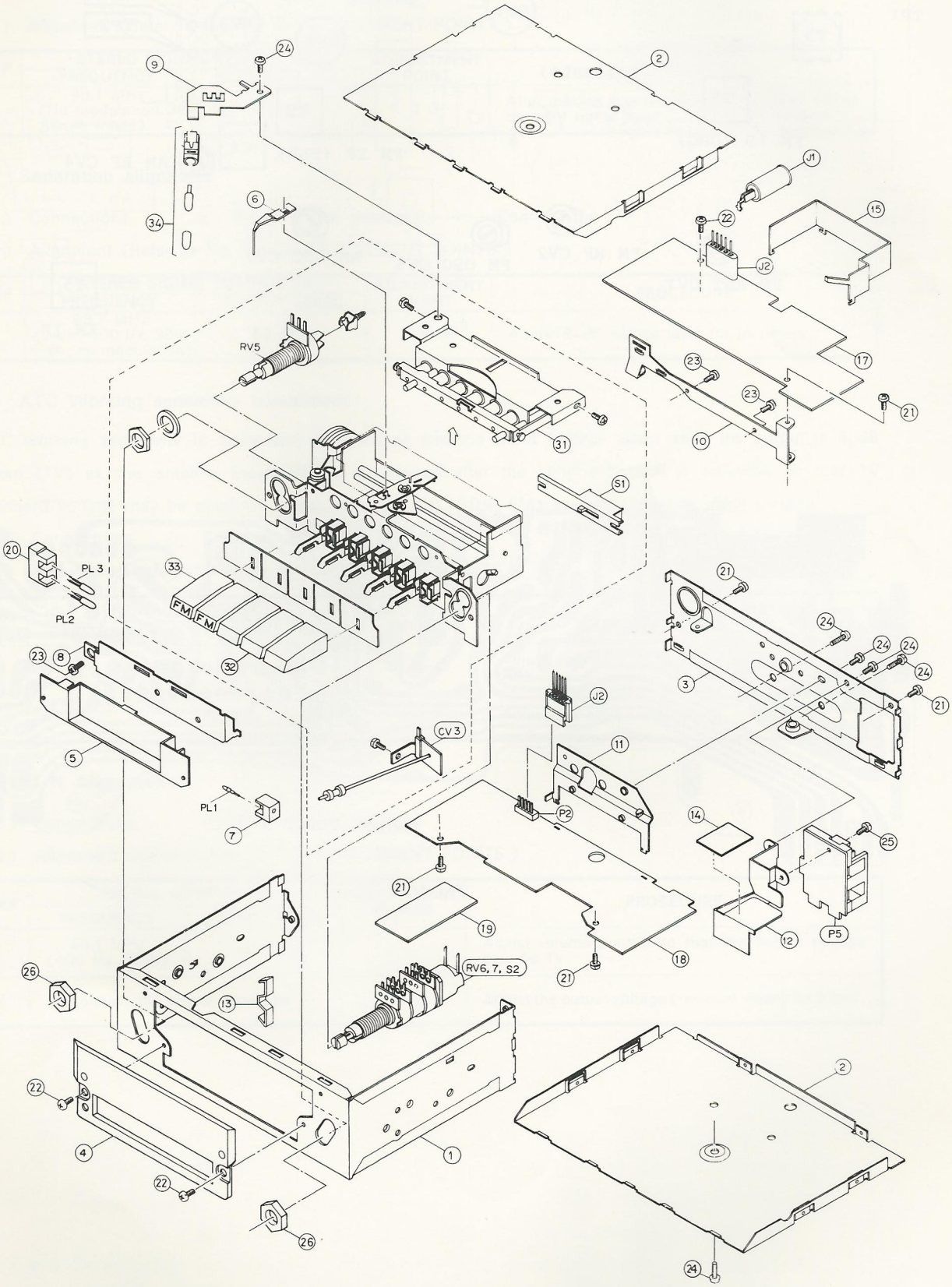

Fig. 11

ITEM	DESCRIPTION	CODE
RV6	10K OHM x 4 Tone Vol	4802 102 27122
RV7	10K OHM x 4 Tone Vol	4802 102 27122
T1	FM 1FT	4802 153 57211
	Push-Button U Tuner (Included)	4802 210 17157
RV5	Balance Control 20K OHM	4802 102 17088
SW1	Band Switch	4802 105 17187
FET1	FET MOS RF AMP	4822 130 40778
TR2	Silicon Muting	4822 130 41532
TR1	Silicon Voltage Regulator	4802 130 47431
T5		4802 153 17351
T4		4802 153 17353
T3	19 kHz Trap Coil	4802 153 17354
T2	FM 1FT	4802 158 17361
IC5	Linear-Monolithic AM Tuner	4822 209 81222
IC6	Linear-Monolithic Power Amp	4802 209 87253
IC7	Linear-Monolithic Power Amp	4802 209 87259
IC2	Linear-Monolithic FM 1F Det	4802 209 87472
IC1	Linear-Monolithic FM RF Conv.	4802 209 87473
IC3	Hy-Brid Noise Blanker	4802 209 87502
IC4	Hy-Brid Multi-Plexer	4802 209 87811
J4	Antenna Receptacle	4802 267 37017
4	Dialplate Caliblated	4802 331 27048
6	Pointer Dialplate	4802 450 87156
5	Backplate Pointer	4802 466 77034

SCHEMATIC

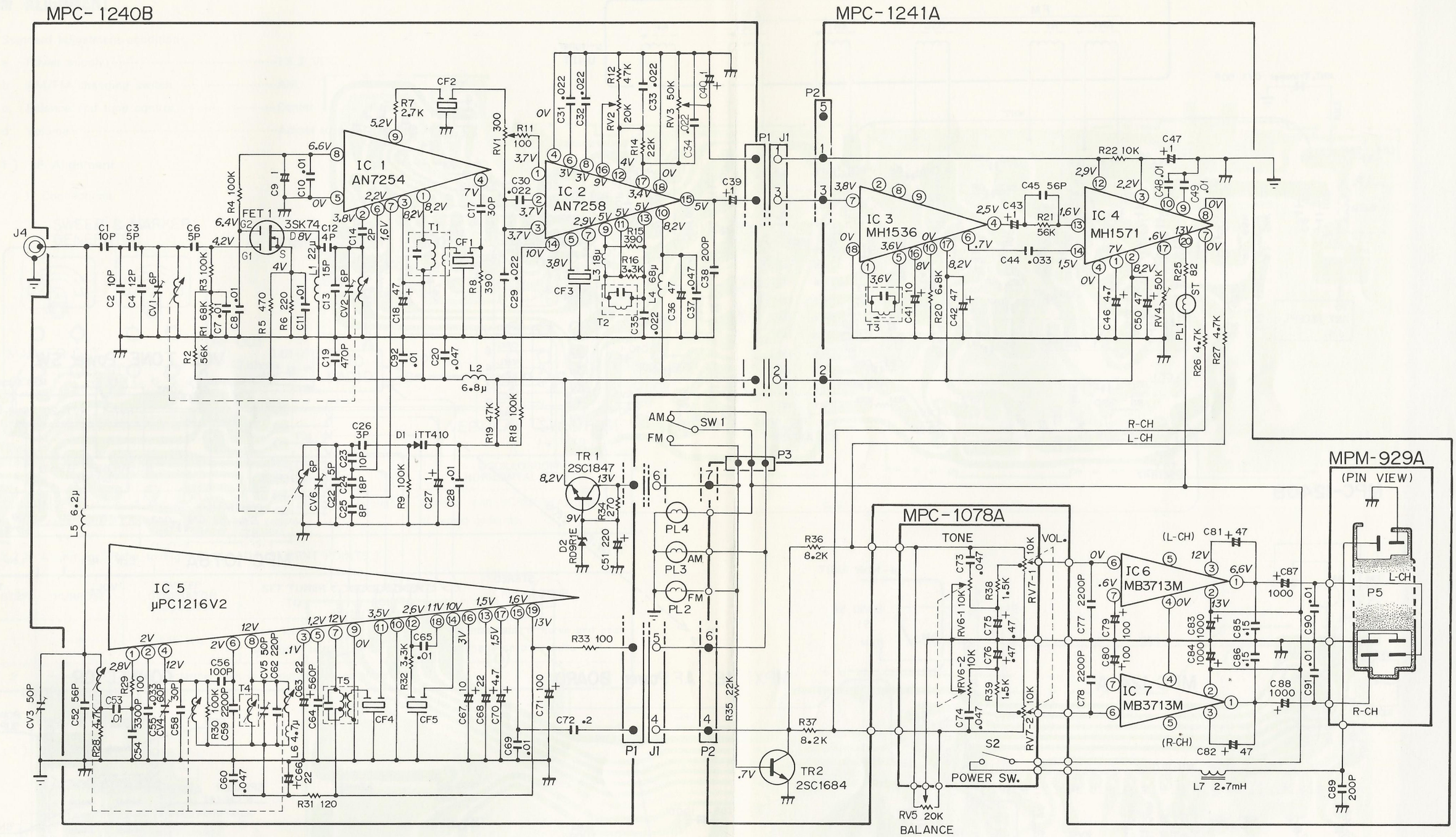

Fig. 2

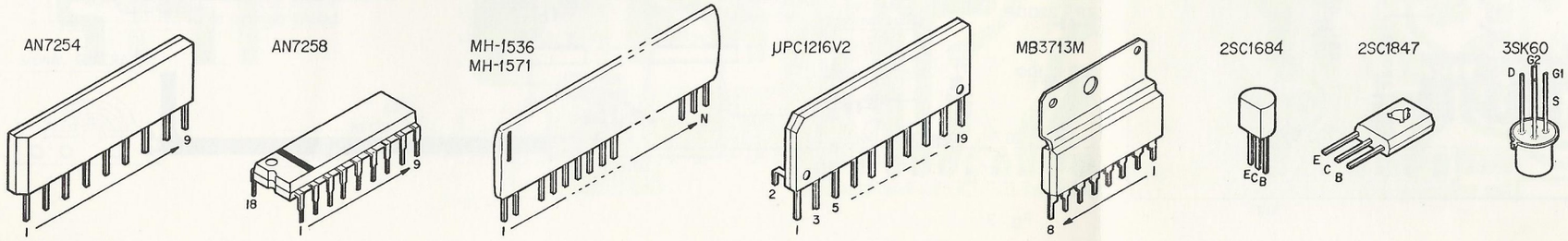

NOTES :

1. All resistance in ohms, K=10^3, M=10^6
2. All capacitance in μF, P=$\mu\mu$F
3. All inductance in henly, m=10^{-3}, μ=10^{-6}
4. DC voltage against the chassis measured with 100k ohms/volt meter, power supply set at +13.2 VDC, no signal input.

WIRING ON PC BOARDS

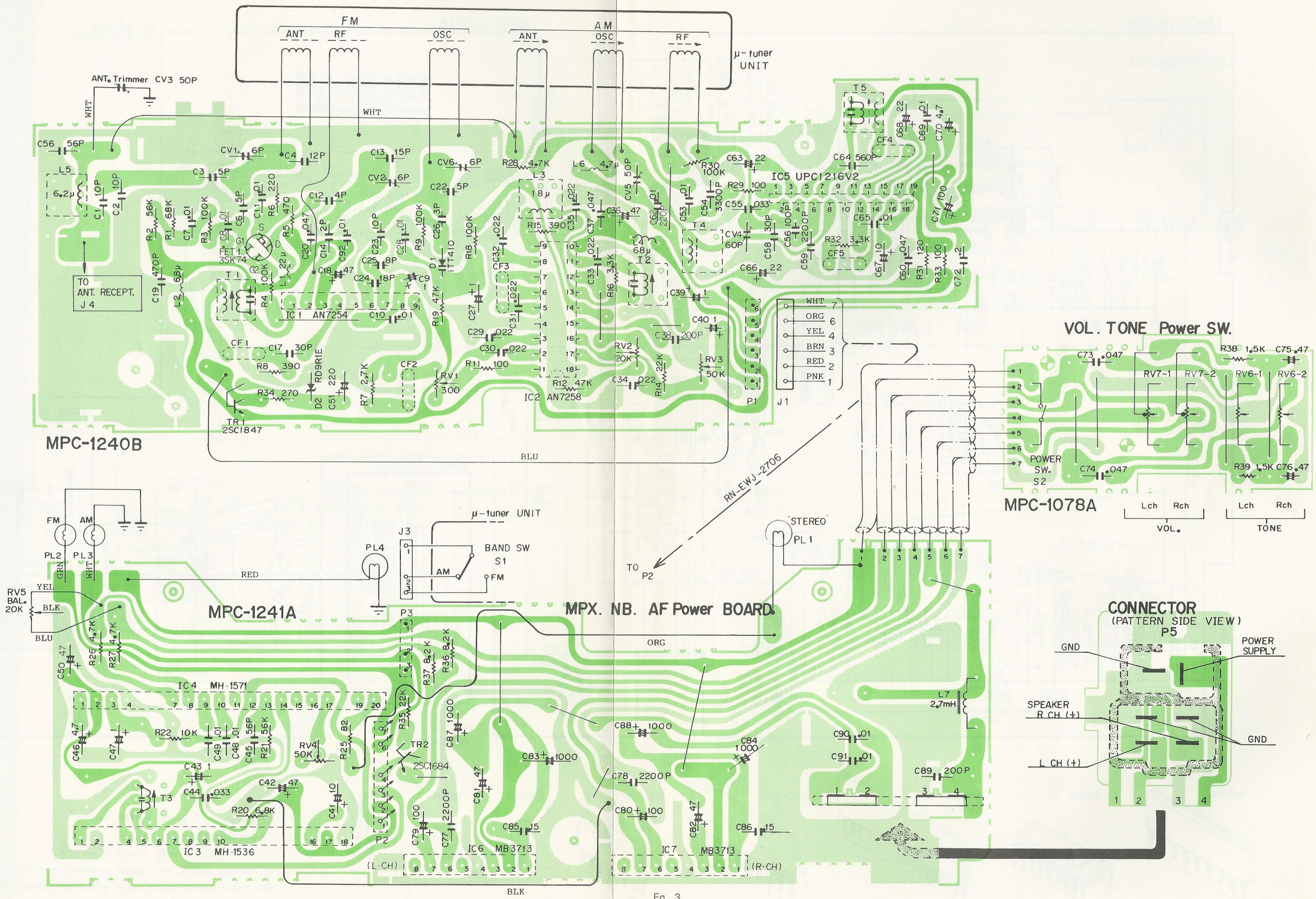

Fig. 3