AM/FM 2 BAND CAR RADIO

OF-74B

Service
Service
Service

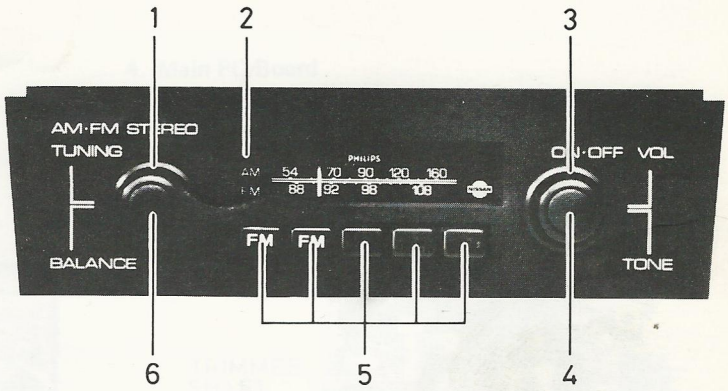

Service Manual

SPECIFICATIONS

TUNER SECTION

Circuit System:	AM/FM MPX 2 band superheterodyne
Tuning Range:	FM: 88 ~ 108 MHz
	AM: 530 ~ 1605 kHz
Intermediate Frequency:	FM: 10.7 MHz
	AM: 455 kHz
Sensitivity:	FM: 2 dB (max.), 13 dB (pra.)
	AM: 12 dB (max.), 26 dB (pra.)
Antenna:	Car antenna

GENERAL

Semiconductors:	10 IC's, 1 FET, 8 diodes
Power Supply:	12V (Car battery), Negative ground
Current Consumption:	200 mA (with no signal)
Output:	5W/CH (Max.)
	3.5W/CH (T.H.D. 10%)
Dimensions:	5.0cm(H) x 16.0cm(W) x 13.0cm(D)
Weight:	1.2 kg

KEY TO ILLUSTRATIONS

1. BALANCE CONTROL
2. ANTENNA TRIMMER
3. TONE CONTROL
4. POWER SWITCH/VOLUME CONTROL
5. PRESET BUTTONS
6. TUNING CONTROL

Subject to modification
4802 725 17128
Printed in Australia

PHILIPS

DISASSEMBLY

1. Upper Cover

Remove one screw Ⓐ

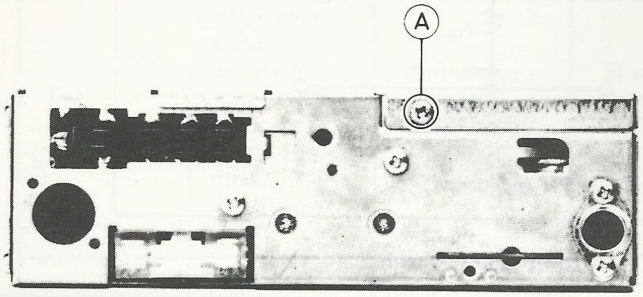

2. Rear Case

Remove two screws Ⓑ and unsolder two lead wires Ⓒ.

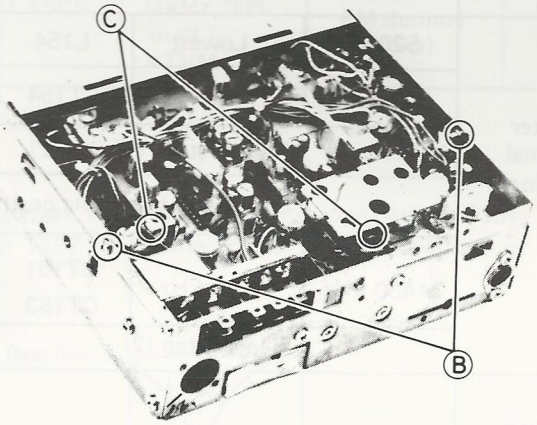

3. Front Case

Remove three screws Ⓓ and two nuts Ⓔ.

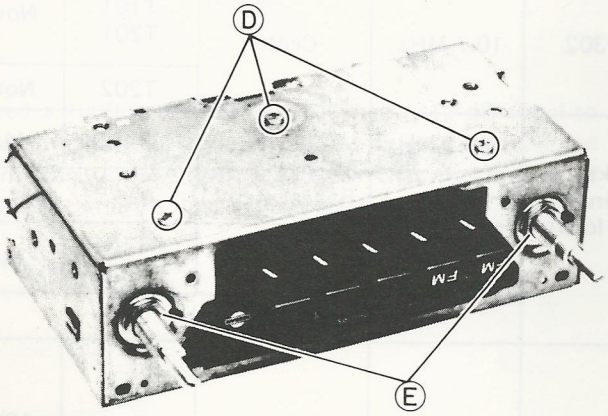

4. Main PC Board

1) Remove two screws Ⓕ and three lamps Ⓖ.
2) Remove trimmer shaft and open the PC board.

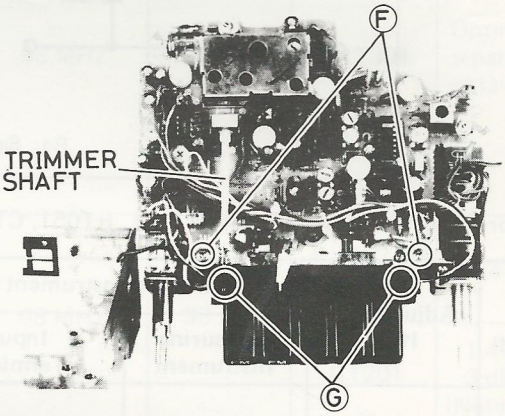

5. AF/Power PC Board

Remove three screws Ⓗ.

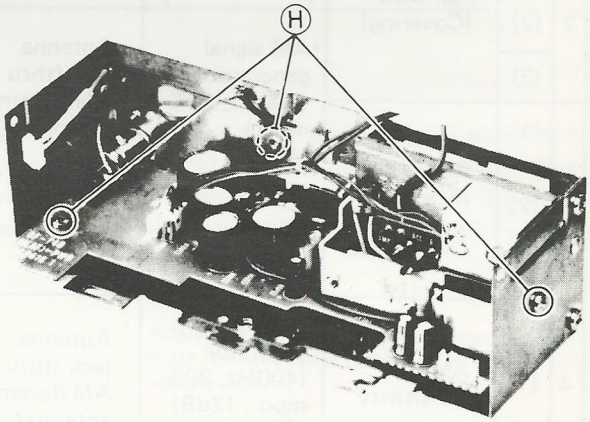

6. Power Unit

Remove three screws Ⓘ and release locking Ⓙ.

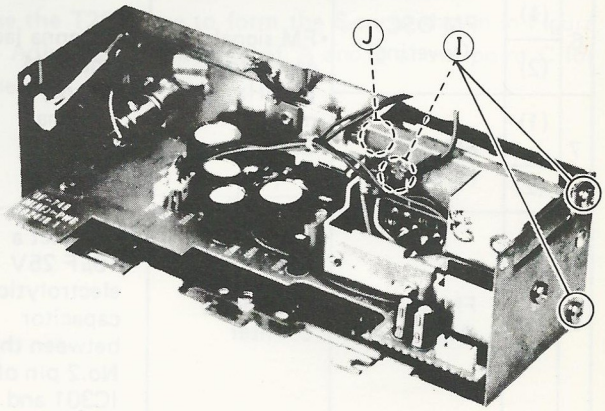

ADJUSTMENT

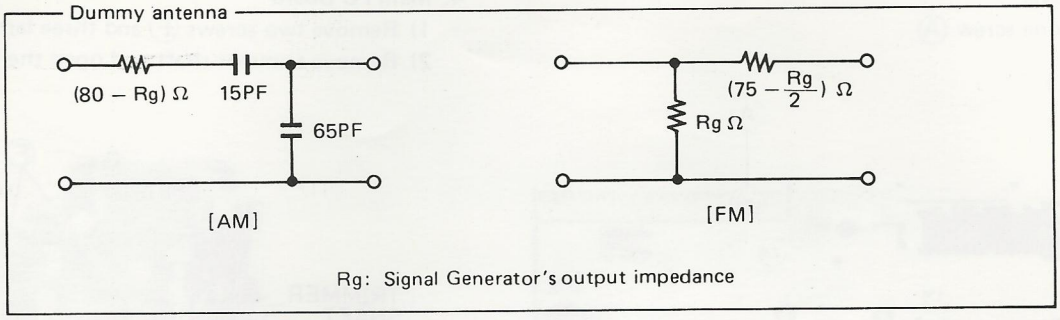

* Before adjustment, set RT201, RT251, RT051, CT101 and CT102 to middle position.

Step		Adjustment Item	Measuring Instrument and Connection: Measuring Instrument	Input Terminal	Output Terminal	Genescope or Signal Generator Frequency	Dial Pointer Position	Adjust	Reading
1	(1)	AM IF	•Genescope (455 kHz)	Antenna jack	TP302	455 kHz	Highest	T151 T251 T252	Note 1
	(2)					Repeat step (1)			
2	(1)	AM OSC. (Covering)	•AM signal generator (400Hz, 30% mod.) •VTVM	Antenna jack (thru AM dummy antenna)	Speaker terminal (4Ω load)	520 kHz	Lowest	L154	Max.
	(2)					1650 kHz	Highest	CT154	
	(3)					Repeat steps (1) and (2)			
3	(1)	AM ANT. (Tracking)				Set CT152 to middle position.			
	(2)					1400 kHz	1400 kHz	CT151 CT153	Max.
	(3)					Repeat step (2)			
4	(1)	AM Sensitivity	•AM signal generator (400Hz, 30% mod., 12dB) •VTVM	Antenna jack (thru AM dummy antenna)	Speaker terminal (4Ω load)	1000 kHz	1000 kHz	RT251	0.5W (1.41V) Note 2
5	(1)	FM IF	Turn T202 fully clockwise.						
			•Genescope (10.7 MHz)	TP101	TP302	10.7 MHz	Center	T101 T201	Note 3
	(2)	S-Curve						T202	Note 4
6	(1)	FM OSC. (Covering)	•FM signal generator (400Hz, 30% mod.) •Oscilloscope •VTVM	Antenna jack (thru FM dummy antenna)	Speaker terminal (4 Ω load)	86.7 MHz	Lowest	CT103	Max.
	(2)					Repeat step (1)			
7	(1)	FM ANT. (Tracking)				98 MHz	98 MHz	CT101 CT102	Max.
	(2)					Repeat step (1)			
8	(1)	FM MPX (Multiplex)	•Frequency counter	Connect a 10μF 25V electrolytic capacitor between the No.2 pin of IC301 and ground.	TP301	—	—	RT302	19kHz ±100Hz (Note 5)

Step		Adjustment Item	Measuring Instrument and Connection			Genescope or Signal Generator Frequency	Dial Pointer Position	Adjust	Reading
			Measuring Instrument	Input Terminal	Output Terminal				
9	(1)	FM Separation	• FM stereo signal generator (Main: 30% mod. Pilot: 10% mod. 74 dB) • VTVM	Antenna jack (thru FM dummy antenna)	Speaker terminal (4 Ω load)	98 MHz	98 MHz	RT301	Optimum separation obtained
10	(1)	FM Sensitivity	• FM signal generator (400Hz, 30% mod.) • VTVM	Antenna jack (thru FM dummy antenna)	Speaker terminal (4 Ω load)	98 MHz	98 MHz	RV502A,B (volume)	1.41V
	(2)							RT201	1.41V–3 dB (Note 6)
11	(1)	FM ASCS	• FM signal generator (7kHz, 30% mod.) • VTVM	Antenna jack (thru FM dummy antenna)	Speaker terminal (4 Ω load)	98 MHz	98 MHz	RV502A,B (Volume)	50 mW
	(2)							RT051	50 mW–6dB (Note 7)

Note:

1. Feed in a weak signal from the genescope. Adjust T151, T251 and T252 for maximum gain and the waveform of Figure 1.

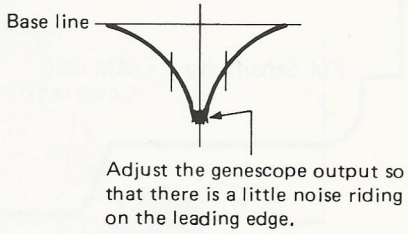

Fig. 1

2. Feed a 1000 kHz (400 Hz, 30% mod.), 12 dB signal to the antenna jack through the AM dummy antenna and tune the unit. Adjust RT251 so that the output of speaker terminals (4Ω load) is 0.5W (1.41V).

3. Feed in a weak signal to TP101 from the genescope. Adjust T101 and T201 for maximum gain and the waveform indicated in Figure 2. If the center of the waveform cannot be lined up on the marker, adjust the right/left balance.

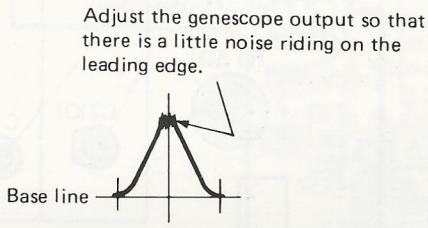

Fig. 2

4. Use the T202 core to form the S-curve shown in Figure 3. Adjust the symmetry of A and B about point C for linearity.

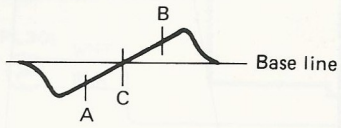

Fig. 3

5. Connect the frequency counter to TP301.

6. 1) Feed a 98 MHz (400 Hz, 30% mod.) 74 dB signal through the FM dummy antenna to the antenna jack and tune the unit.
   2) Adjust the volume control so that the voltage of speaker terminal (4 ohm load) is 1.41V.
   3) Set the signal generator output to 14 dB and adjust RT201 so that the voltage of speaker terminal (4 ohm load) is 1.41V – 3dB.

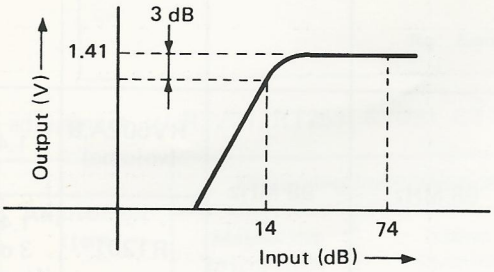

Fig. 4

7. 1) Feed a 98 MHz (7 kHz, 30% mod.), 74 dB signal through the FM dummy antenna to the antenna jack and tune the unit.
   2) Adjust the volume control so that the voltage of speaker terminal (4 ohm load) is 50 mW.
   3) Set the signal generator output to 32 dB and adjust RT051 so that the voltage of speaker terminal (4 ohm load) is 50 mW–6 dB.

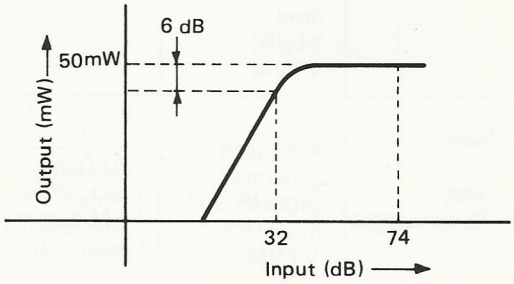

Fig. 5

ADJUSTMENT PARTS LOCATION

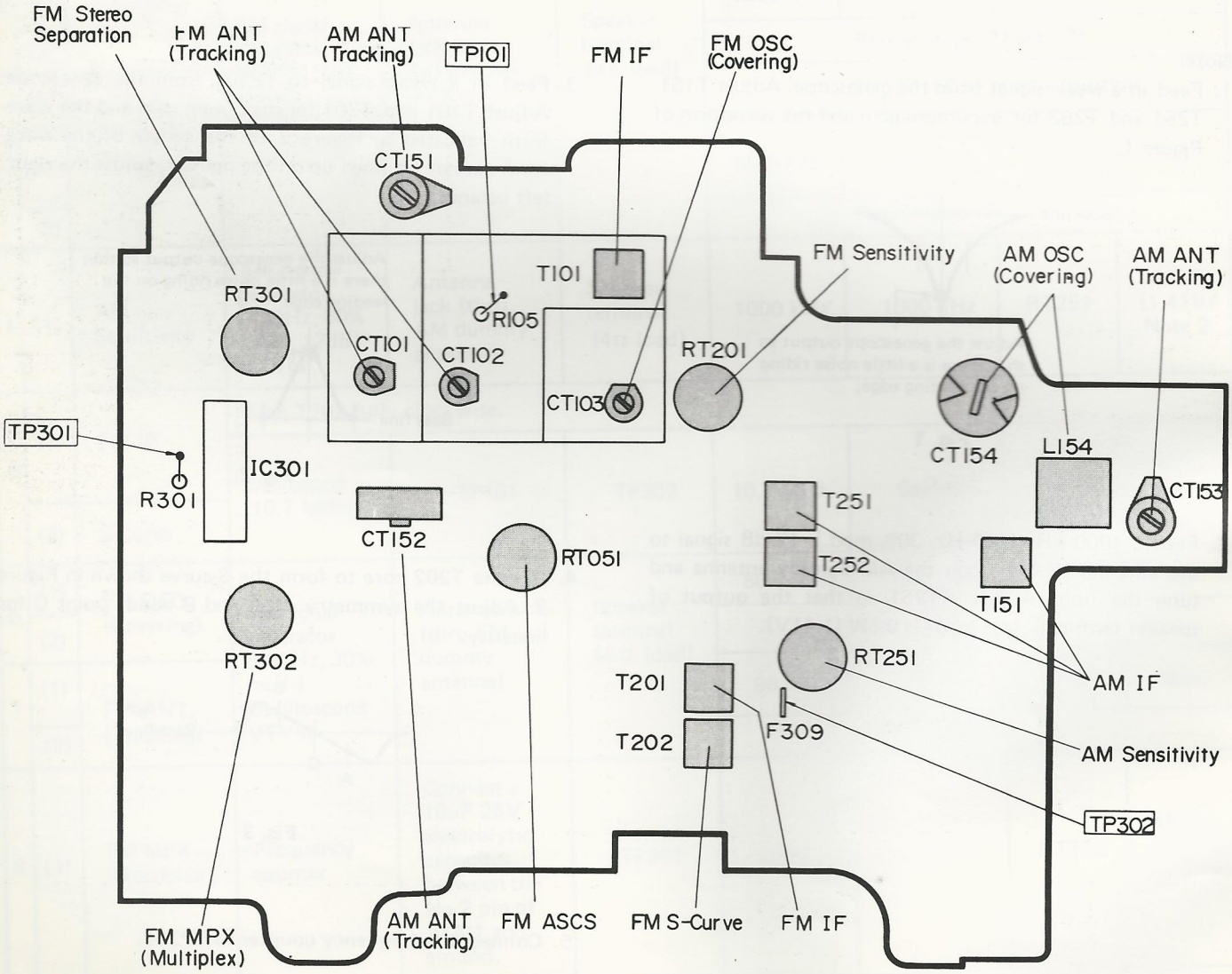

CF201	Ceramic Filter 10.7 MHZ	4822 242 70247
CF251	Ceramic Filter 455 KHZ	4822 242 70113
CT101	Trimmer Capacitor 8pF	4802 125 57048
CT151	Trimmer Capacitor 50pF	4802 125 57036
CT152	Trimmer Capacitor 20pF	4802 125 57129

T101	FM IF Transformer	4802 153 57067
T151	AM IF Transformer	4802 153 17068
T154	Oscillator Coil	4802 156 37015
T201	FM Discriminator	4802 153 57066
T202	FM IF Transformer	4802 153 57065
T251	AM IF Transformer	4802 153 17269
T252	AM IF Transformer	4802 153 17268
L101	Trap Coil	4802 158 17085

RV502	Resistor Variable & Switch	4802 102 57011
RV501	Resistor Variable 20K	4802 102 57011
RV502	Resistor Variable 20K	4802 102 57011

IC051	I.C. TA2055	4802 209 87930
IC101	I.C. TA2031M	4802 209 87295
IC102	I.C. TA2032	4802 209 87294
IC151	Integrated Circuit HA1199	4802 209 87122
IC202	Integrated Circuit AN278	4802 209 87292
IC201	Integrated Circuit TA2033	4802 209 87293
IC251	Integrated Circuit TA2034	4802 209 87291
IC301	Integrated Circuit HA11227	4802 209 87289
IC501	Integrated Circuit HA1366W	4802 209 87166

D602	V06C	4822 130 30684
D201-202	HZ-7C	4822 130 30768
D051-052	IS2076A	5322 130 34792
D203-204	IN60	4822 130 30312
D101	IS2790	4822 130 31462

Q101	Transistor 2SK168E	4802 130 47348

- Miscellaneous - Divers -

Q1	Knob (L)	4802 413 47133
Q10	Lamp Holder (R)	4802 256 97038
Q11	Collar Cap Green	4802 381 17065
Q12	Push Button Tuner	4802 410 27234
Q13	Push Button Tuner (FM)	4802 410 27233
Q2	Knob (S)	4802 413 47134
Q527	Lamp	4802 134 47103
Q530	Lamp	4802 134 47032
Q534	Lamp	4802 134 47104
Q6	Dial Scale	4802 331 27049
Q7	Plate Back	4802 466 77086
Q728	Jack Antenna	4802 263 47002
Q8	Lamp Holder (L)	4802 256 97037
Q9	Tuner Button	4802 691 17038
PL601	Lamp Pilot	4802 134 47193
PL602	Lamp Pilot	4802 134 47194

SCHEMATIC DIAGRAM

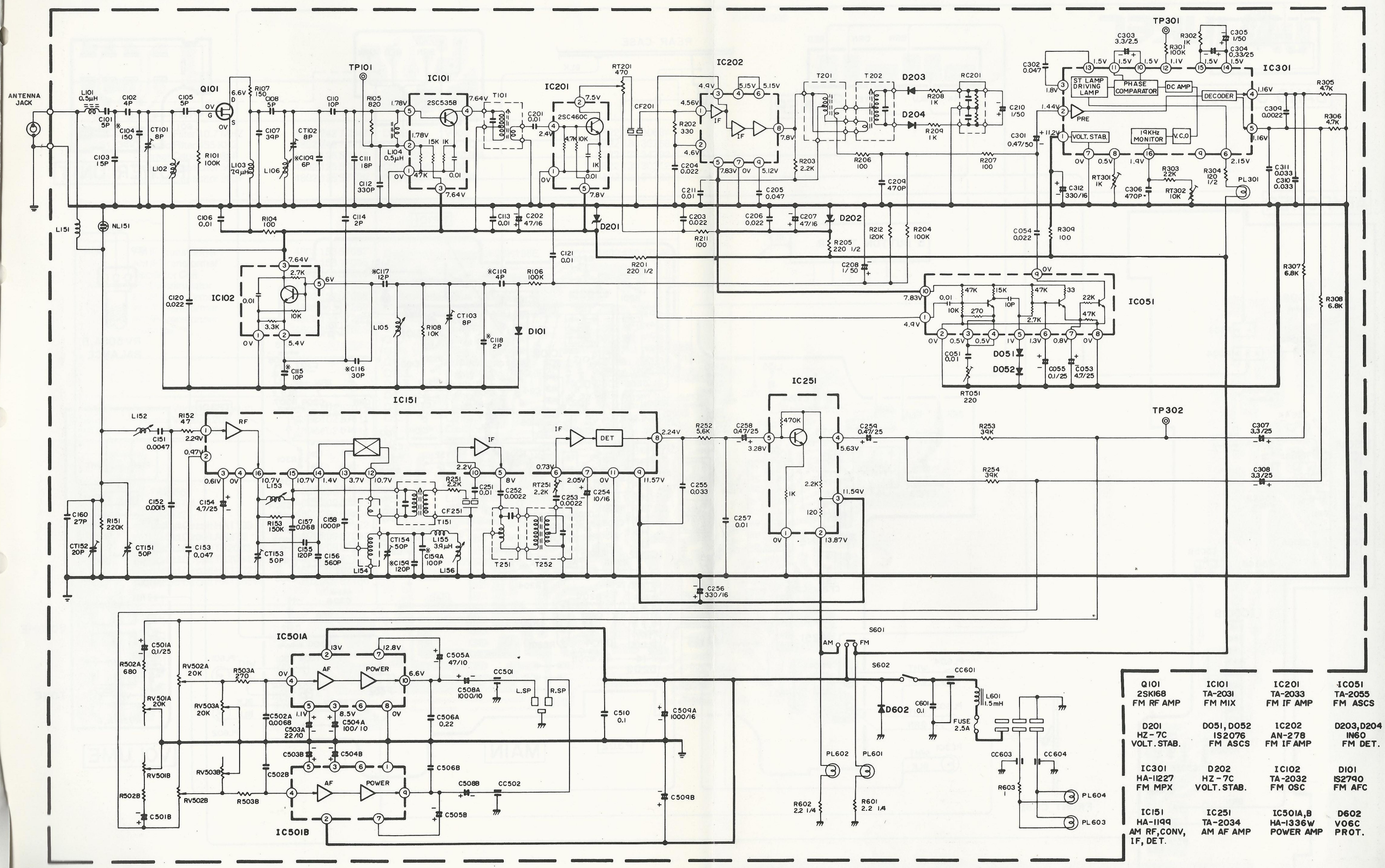
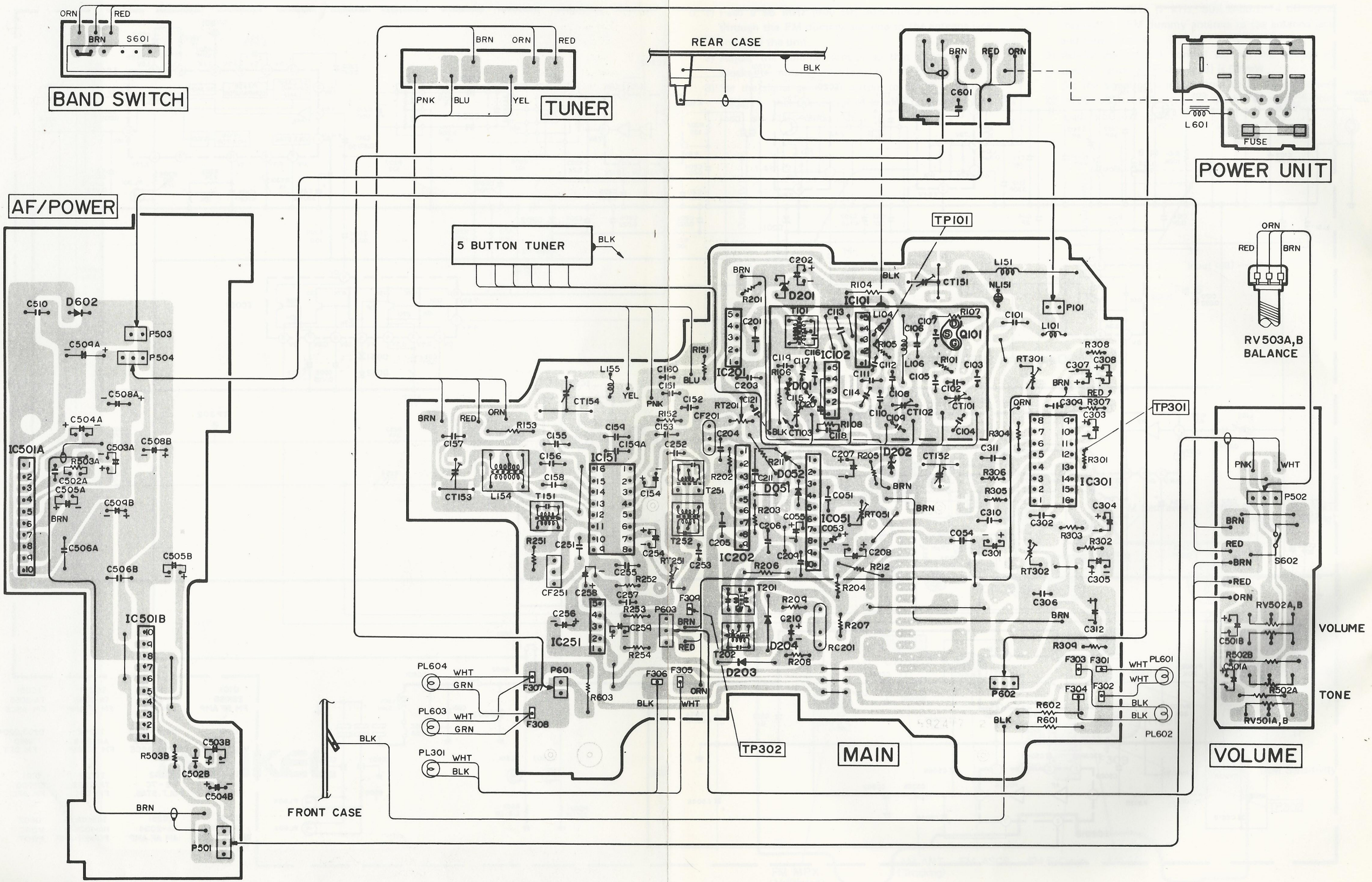
CIRCUIT BOARD DIAGRAM