ORDER NO. RD-491

NATIONAL PANASONIC
Service Manual

4-BAND 9-TRANSISTOR PORTABLE RADIO

MODEL R-100

SPECIFICATIONS

Frequency Range:	MW	525~1605 kc/s (571~187 m)
	SW1	1.6 ~ 4.5 Mc/s (187~66.7 m)
	SW2	4.5 ~ 12 Mc/s (66.7 ~ 25 m)
	SW3	12 ~ 26.1 Mc/s (25 ~ 11.5 m)
Intermediate Frequency:	455 kc/s	
Transistors:	2SA341	Converter
	2SA101	1st IF Amplifier
	2SA101	2nd IF Amplifier
	2SB173	Pre-Amplifier
	2SB173	1st AF Amplifier
	2SB173	2nd AF Amplifier
	2SB175	3rd AF Amplifier
	2SB324 / 2SB324	Power Amplifier (push-pull)
Diodes:	OA70	D. AGC
	OA70	Detector & AGC

Sensitivity:	MW	50μV/m for 50mW Output
	SW1	50μV/m for 50mW Output
	SW2	50μV/m for 50mW Output
	SW3	50μV/m for 50mW Output
Power Output:	1.2W	Undistorted
	2W	Maximum
Batteries:	9V (Six "D" size flashlight batteries) (NATIONAL UM-1 or equivalent)	
Speakers:	12cm (5") Plus 9cm (3½") PM Dynamic Speakers (Imp. 8Ω & 16Ω)	
Cabinet Dimensions:	334 (Wide) × 274 (High) × 130.5 (Deep) mm (13 5/32" × 10 25/32" × 5⅛")	
Weight:	5 kg. (11 lb.) with Batteries	

<EXPORT DIVISION>
MATSUSHITA ELECTRIC TRADING CO., LTD.
P. O. Box 288, Central Osaka, Japan

MATSUSHITA ELECTRIC INDUSTRIAL CO., LTD.
RADIO DIVISION

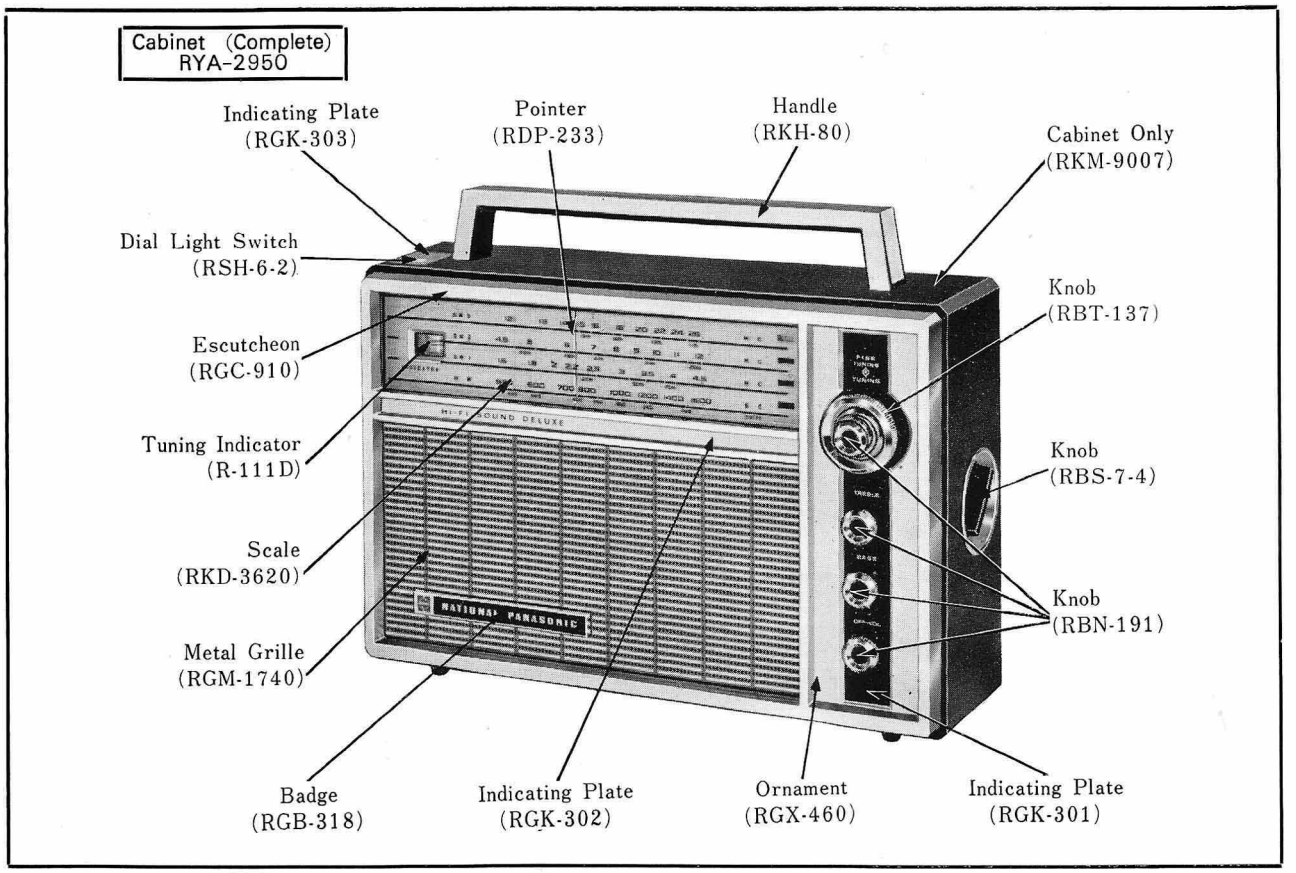

Fig. 1 Cabinet & Appearance - Parts Identification.

To Remove Chassis (Refer to Fig. 2 - A & B)

1. Remove six (6) control knobs from cabinet after setting dial pointer to low end of dial scale.
2. Remove five (5) cabinet back cover mounting screws, Nos. 1～5, as illustrated in Fig. 2-A.
3. Pull out plugs.
4. Remove dial cord from dial pointer bracket.
5. Remove seven (7) red chassis mounting screws, Nos. 1～7, as illustrated in Fig. 2-B.
6. To remove chassis completely, unsolder leadwires to speaker terminals and remove indicator & dial light switch from cabinet.
7. To reassemble, reverse the above procedure.

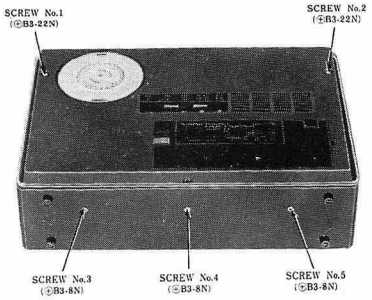

Fig. 2-A

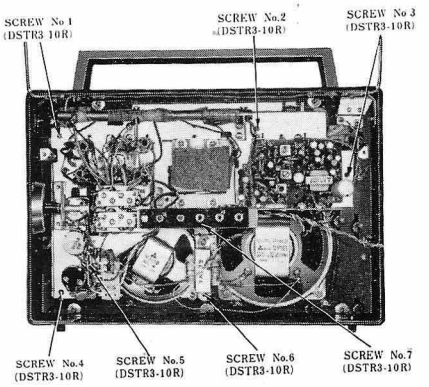

Fig. 2-B

Fig. 2 Top View - Disassembly Points.

Notes:

1. Dial cord length is 145cm (57 3/32").
2. Tuning gang is positioned at maximum capacity.
3. Arrow marks (1~9) indicate correct order and direction of stringing dial cord.
4. Cement dial cord ends.

To Mount Dial Pointer

1. Set tuning gang to fully closed position.
2. Set dial pointer to start point of dial scale.
3. Attach dial cord dial pointer.

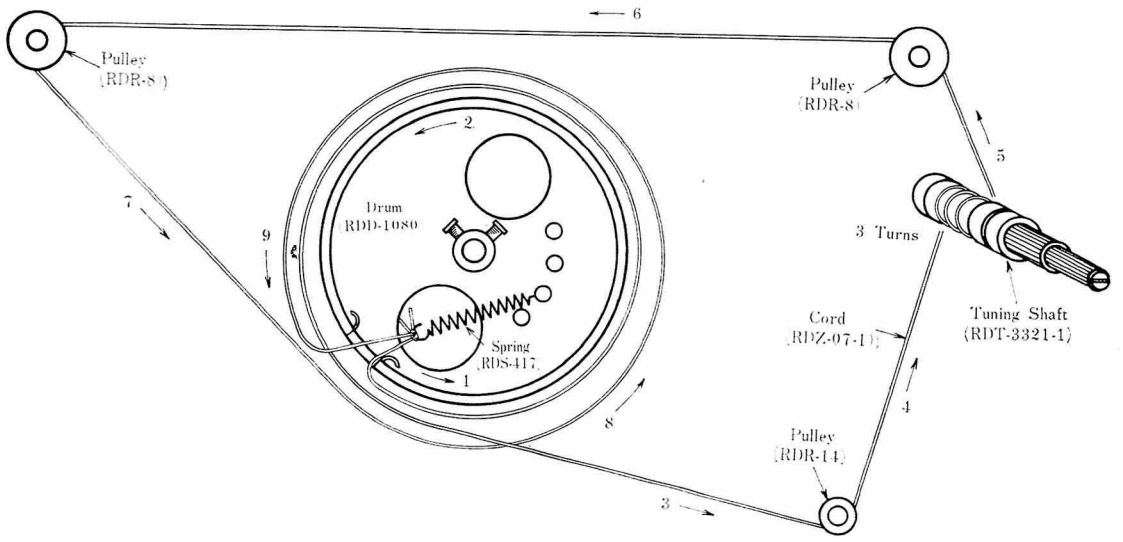

Fig. 3 Dial Cord Stringing Guide.

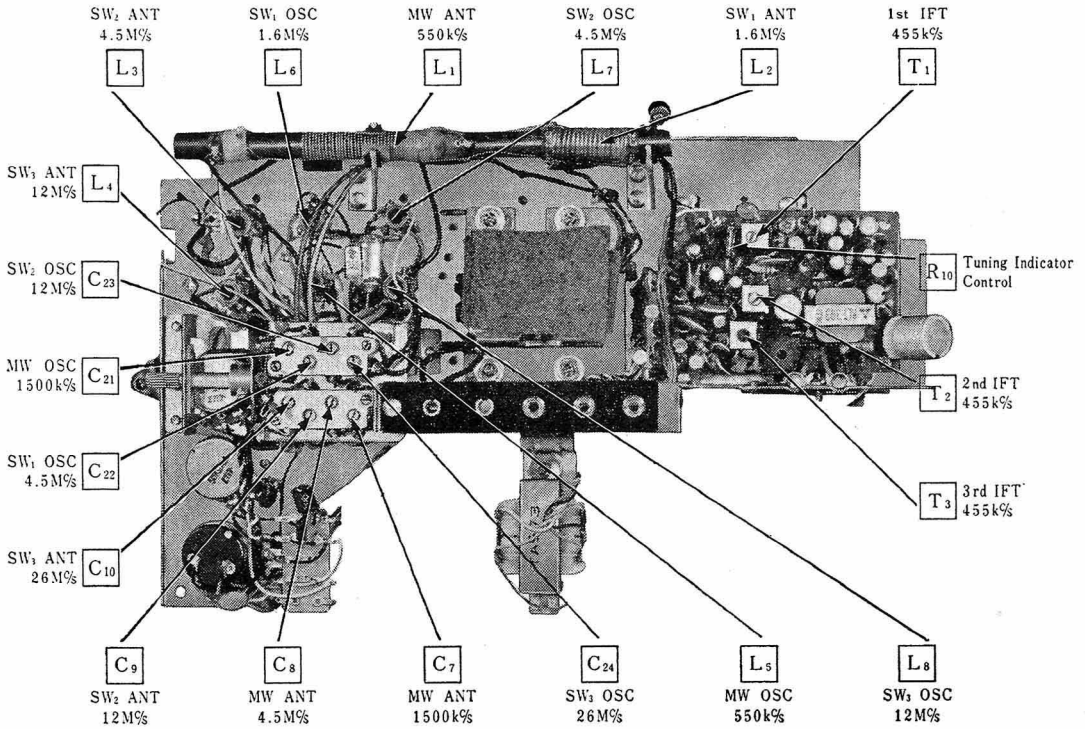

Fig. 4 Top View - Alignment Points.

ALIGNMENT INSTRUCTIONS

TUNING INDICATOR ADJUSTMENT

1. Radio Receiver Setting
   - Set band selector switch to MW.
   - Set tuning gang to noninterference point (on/about 550 kc/s).
2. Remarks
   Adjust 200kΩ potentiometer (R_{10}) so that the pointer of the tuning indicator stays as shown in Fig. 5.

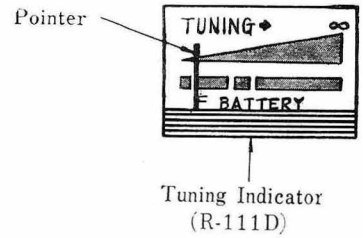

Fig. 5

Output of signal generator should be no higher than necessary to obtain an output reading.
Set volume control to maximum.
Set bass control to Center.
Set treble control to Center.
Set fine tuning control to center.
Set power source voltage to 9 volts DC.

	Band Switch Position	SIGNAL GENERATOR COUPLING	SIGNAL GENERATOR FREQUENCY	RADIO DIAL SETTING	INDICATOR	ADJUST	REMARKS
1	MW	Fashion loop of several turus of wire and radiate signal into loop of receiver.	455 kc/s (400~ Mod.)	Point of noninterference (on/about 550 kc/s)	Output meter across voice coil	T_1 (1st IFT) T_2 (2nd IFT) T_3 (3rd IFT)	Adjust for maximum output.
2	MW	〃	550 kc/s (400~ Mod.)	550 kc/s	〃	L_5 (OSC Coil) L_1 (ANT Coil)	Adjust for maximum output by sliding coil (L_1) along ferrite core.
3	MW	〃	1500 kc/s (400~ Mod.)	1500 kc/s	〃	C_{21} (OSC Trimmer) C_7 (ANT Trimmer)	Adjust for maximum output. Repeat steps (2) and (3).
4	SW_1	〃	1.6 Mc/s (400~ Mod.)	1.6 Mc/s	〃	L_6 (OSC Coil) L_2 (ANT Coil)	Adjust for maximum output by sliding coil (L_2) along ferrite core.
5	SW_1	〃	4.5 Mc/s (400~ Mod.)	4.5 Mc/s	〃	C_{22} (OSC Trimmer) C_8 (ANT Trimmer)	Adjust for maximum output. Repeat steps (4) and (5).
6	SW_2	Stand frame antenna and radiate signal a to frame antenna.	4.5 Mc/s (400~ Mod.)	4.5 Mc/s	〃	L_7 (OSC Coil) L_3 (ANT Coil)	Adjust for maximum output.
7	SW_2	〃	12 Mc/s (400~ Mod.)	12 Mc/s	〃	C_{23} (OSC Trimmer) C_9 (ANT Trimmer)	Adjust for maximum output. Repeat steps (6) and (7).
8	SW_3	〃	12 Mc/s (400~ Mod.)	12 Mc/s	〃	L_8 (OSC Coil) L_4 (ANT Coil)	Adjust for maximum output.
9	SW_3	〃	26 Mc/s (400~ Mod.)	26 Mc/s	〃	C_{24} (OSC Trimmer) C_{10} (ANT Trimmer)	Adjust for maximum output. Repeat steps (8) and (9).

Note: Cement antenna bobbin with wax after completing alignment.

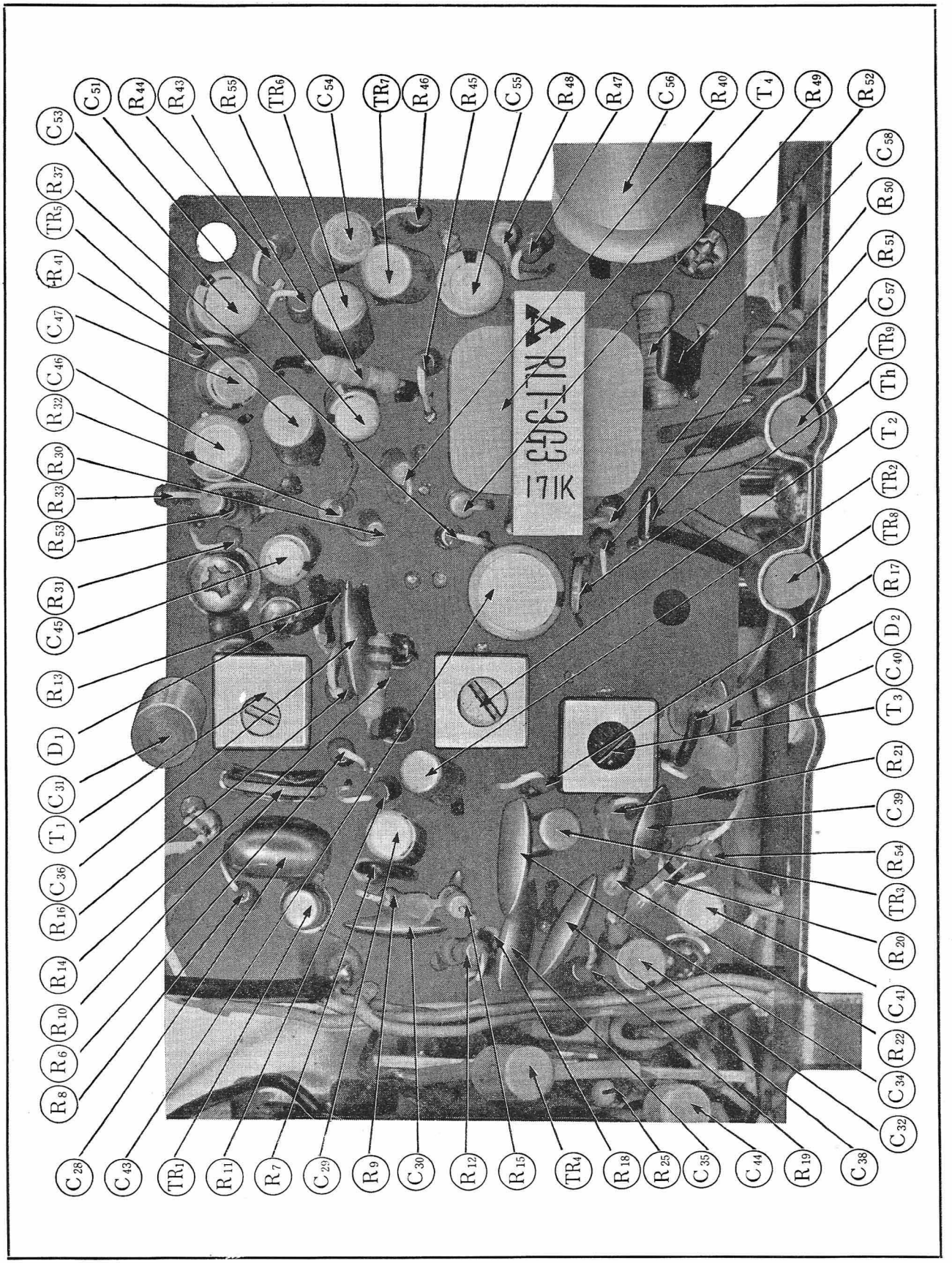

Fig. 8 Component View - Parts Identification.

REPLACEMENT PARTS LIST

MODEL R-100

Ref. No.	Part No.	Description
		TRANSISTORS AND DIODES
TR_1	2SA341	Converter
TR_2	2SA101	1st IF Amplifier
TR_3	2SA101	2nd IF Amplifier
TR_4	2SB173	Pre-Amplifier
TR_5	2SB173	1st AF Amplifier
TR_6	2SB173	2nd AF Amplifier
TR_7	2SB175	3rd AF Amplifier
TR_8, TR_9	2SB324	Power Amplifier (push-pull)
D_1	OA70	D. AGC
D_2	OA70	Detector & AGC
		THERMISTOR
Th	MT-080	Temperature Compensator
		CAPACITORS
C_{11}, C_{12}	ECK-D05472P	0.0047μF, 50WV, +100%, −0%, Ceramic Disc
C_{13}	ECK-D05472MY	0.0047μF, 50WV, ± 20%, Ceramic Disc
C_{30}, C_{62}	ECK-D05103MY	0.01μF, 50WV, ± 20%, Ceramic Disc
C_{39}, C_{40}	ECK-D05103P	0.01μF, 50WV, +100%, −0%, Ceramic Disc
C_{34}, C_{35}, C_{36}, C_{38}	ECK-D05333P	0.033μF, 50WV, +100%, −0%, Ceramic Disc
C_{33}	ECC-D05010C	1PF, ±0.25PF, Ceramic
C_3, C_4	ECC-D05070D	7PF, ±0.5PF, Ceramic
C_6, C_{17}	ECC-D05180K	18PF, ±10%, Ceramic
C_{18}	ECC-D05220K	22PF, ±10%, Ceramic
C_5, C_{19}	ECC-D05270K	27PF, ±10%, Ceramic
C_{20}	ECC-D05150K	15PF, ±10%, Ceramic
C_{63}	ECC-U05331K	330PF, ±10%, Ceramic
C_{50}	ECQ-M05472MZ	0.0047μF, 50WV, ± 20%, Polyester
C_{48}, C_{57}, C_{58}	ECQ-M05103MZ	0.01μF, 50WV, ± 20%, Polyester
C_{52}	ECQ-M05473MZ	0.047μF, 50WV, ± 20%, Polyester
C_{28}, C_{42}, C_{49}	ECQ-M05104MZ	0.1μF, 50WV, ± 20%, Polyester
C_{16}, C_{25}	ECQ-S1471J	470PF, ±5% Styrol
C_2	ECQ-S1501J	500PF, ±5% Styrol
C_{26}	ECQ-S1142K-(N)	1400PF, ±10% Styrol
C_{31}	ECQ-S1152KZ	1500PF, ±10% Styrol
C_{27}	ECQ-S1402K	4000PF, ±10% Styrol
C_{29}, C_{41}, C_{44}, C_{45}, C_{47}	ECE-A25V1	1μF, 25WV, Electrolytic
C_{32}, C_{51}, C_{54}	ECE-A6V10	10μF, 6WV, Electrolytic
C_{46}, C_{53}, C_{55}, C_{60}	ECE-A6V30	30μF, 6WV, Electrolytic
C_{43}	ECE-A10V100	100μF, 10WV, Electrolytic
C_{59}	ECE-A10V200	200μF, 10WV, Electrolytic
C_{56}	ECE-A10V500	500μF, 10WV, Electrolytic
C_{61}	ECE-A15V10	10μF, 15WV, Electrolytic
C_1, C_{15}	ECV-2HA43A48	Tuning Gang,
C_7, C_8, C_9, C_{10}, C_{21} C_{22}, C_{23}, C_{24}	ECV-4RW12W11	Trimmer
C_{14}	ECV-1YW02D52A	Fine Tuning Gang
		RESISTORS
R_{49}	ERD-14VK 680	68Ω, ¼Watt, ±10%, Carbon
R_8, R_{51}, R_{53}	ERD-14VK 101	100Ω, ¼Watt, ±10%, Carbon
R_{37}	ERD-14VK 181	180Ω, ¼Watt, ±10%, Carbon
R_{22}	ERD-14VK 331	330Ω, ¼Watt, ±10%, Carbon
R_{43}	ERD-14VK 561	560Ω, ¼Watt, ±10%, Carbon
R_{13}, R_{23}	ERD-14VK 471	470Ω, ¼Watt, ±10%, Carbon
R_{12}	ERD-14VK 681	680Ω, ¼Watt, ±10%, Carbon
R_{15}, R_{48}	ERD-14VK 821	820Ω, ¼Watt, ±10%, Carbon
R_{19}	ERD-14VK 102	1KΩ, ¼Watt, ±10%, Carbon
R_{11}	ERD-14VK 152	1.5KΩ, ¼Watt, ±10%, Carbon
R_9, R_{16}, R_{33}, R_{44}	ERD-14VK 182	1.8KΩ, ¼Watt, ±10%, Carbon
R_{50}	ERD-14VK 272	2.7KΩ, ¼Watt, ±10%, Carbon
R_{46}	ERD-14VK 332	3.3KΩ, ¼Watt, ±10%, Carbon
R_{31}	ERD-14VK 392	3.9KΩ, ¼Watt, ±10%, Carbon
R_7, R_{18}	ERD-14VK 472	4.7KΩ, ¼Watt, ±10%, Carbon
R_{32}	ERD-14VK 562	5.6KΩ, ¼Watt, ±10%, Carbon
R_{20}, R_{41}, R_{54}	ERD-14VK 103	10KΩ, ¼Watt, ±10%, Carbon
R_{45}	ERD-14VK 153	15KΩ, ¼Watt, ±10%, Carbon
R_6	ERD-14VK 223	22KΩ, ¼Watt, ±10%, Carbon

Ref. No.	Part No.	Description
		RESISTORS
R_{30}	ERD-14VK 333	33KΩ, ¼Watt, ±10%, Carbon
R_{40}	ERD-14VK 683	68KΩ, ¼Watt, ±10%, Carbon
R_{47}	ERD-14VK 104	100KΩ, ¼Watt, ±10%, Carbon
R_{21}	ERD-14VK 822	8.2KΩ, ¼Watt, ±10%, Carbon
R_{17}	ERD-14VK 183	18KΩ, ¼Watt, ±10%, Carbon
R_{55}	ERD-14TK 561	560Ω, ¼Watt, ±10%, Carbon
R_4	ERD-14TK 151	150Ω, ¼Watt, ±10%, Carbon
R_{14}	ERD-14VK 154	150KΩ, ¼Watt, ±10%, Carbon
R_2, R_5	ERD-14TK 390	39Ω, ¼Watt, ±10%, Carbon
R_3	ERD-14TK 221	220Ω, ¼Watt, ±10%, Carbon
R_{36}	ERD-14TK 102	1KΩ, ¼Watt, ±10%, Carbon
R_{34}	ERD-14TK 103	10KΩ, ¼Watt, ±10%, Carbon
R_{27}	ERD-14TK 153	15KΩ, ¼Watt, ±10%, Carbon
R_{26}	ERD-14TK 274	270KΩ, ¼Watt, ±10% Carbon
R_{25}	ERD-14TK 474	470KΩ, ¼Watt, ±10%, Carbon
R_{38}	ERD-14TK 562	5.6KΩ, ¼Watt, ±10%, Carbon
R_{42}	ERD-14TK 332	3.3KΩ, ¼Watt, ±10%, Carbon
R_{52}	ERC-12GM 1R5	1.5Ω, ½Watt, ±20%, Solid
R_{10}	EVL-TOAA00B25	200KΩ, (B), Tuning Indicator Control
R_{29}	EVC-B0DL40D53	5KΩ, (D), Volume Control W/ON-OFF Switch (S_3)
R_{35}	EVC-B0AL40A54	50KΩ (A), Bass Control
R_{39}	EVC-B0AL40A54	50KΩ (A), Treble Control
		COILS AND TRANSFORMERS
L_1, L_2	RLF-5G62	LW & MW Antenna Coil
L_3	RLA-3Q37	SW_2 Antenna Coil
L_4	RLA-3Q38	SW_3 Antenna Coil
L_5	RLO-2Q30	MW Oscillator Coil
L_6	RLO-3Q72	SW_1 Oscillator Coil
L_7	RLO-3Q109	SW_2 Oscillator Coil
L_8	RLO-3Q74	SW_3 Oscillator Coil
T_1	RLI-7C11	1st IF Transformer
T_2	RLI-2C211-T	2nd IF Transformer
T_3	RLI-2C450-T	3rd IF Transformer
T_4	RLT-3G3	Input Transformer, P=10KΩ : S=2.5KΩ
T_5	RLT-2J33	Output Transformer, P=100Ω : S=5Ω
		SPEAKERS AND EARPHONE
SP_1	EAS-12P16S	12cm (5″) PM Dynamic Speaker, 8Ω
SP_2	EAS-9P37SB	9cm (3½″) PM Dynamic Speaker, 16Ω
EP	EAE-1TB	Magnetic Earphone 8Ω
		SWITCH
S_{1-1}~S_{1-6}	ESR-C3A4L50A	Band Selector Switch
		MISCELLANEOUS
	RVL-108	Dial Light, 4.5V 50mA (2 Req'd)
	RVL-408	Neon Lamp, Arrestor, 0.3A
	RJP-4-1	Plug, Power Source
	RJP-11	Plug, EXT Antenna
	RJP-11-2	Plug, EXT Ground
	RJJ-13-1	Jack, Phono
	RJJ-25	Jack, REC OUT & Earphone
	RJV-102	Socket, Dial Light (2 Req'd)
	RJF-3220	Jack, EXT Antenna & Ground
	RJF-3306	Socket, Power Source
	RJC-102	Terminal, Battery (⊕ side) (2 Req'd)
	RJC-502	Spring, Battery (⊖ side) (2 Req'd)
	RJB-1009	Case, Battery
	RUL-218	Indicator Holder
	RUE-9006	Retainer, Band Selector Switch
	RUV-264	Box, AC Cord
	RMA-115	Bracket (Small), Frame Antenna (2 Req'd)
	RMA-116	Bracket (Large), Frame Antenna (2 Req'd)
	RMA-57	Bracket, Core Antenna (2 Req'd)
	RMS-30	Bracket, Speaker (3 Req'd)
	RMM-19	Bracket, Tuning Indicator (2 Req'd)
	RMY-22	Heat Sink, Transistor (TR_8 & TR_9)
	RDT-3321-1	Shaft, Tuning
	RDD-1080	Drum, Dial
	RDR-8	Pulley (Large), Dial Cord (2 Req'd)
	RDR-14	Pulley (Small), Dial Cord
	RDY-8	Shaft (Short), Pulley (2 Req'd)

Ref. No.	Part No.	Description
		MISCELLANEOUS
	RDY-1	Shaft (Long), Pulley
	RDS-417	Spring, Dial
	RDZ-07-1	Cord, Dial, 145cm (57 3/32")
	RBX-1-1	Spring, Battery Compartment Cover
	RBX-57-1	Bracket, Battery Compartment Cover
	⊕B3-8N	Screw, Cabinet Back Cover M'tg. (3 Req'd)
	⊕B3-22N	Screw, Cabinet Back Cover (2 Req'd)
	DSTR3-10R	Red Screw, Chassis M'tg. (7 Req'd)
	L3-5.5	Screw, Drum & Retainer M'tg. (4 Req'd)
	RNW-322	Washer, Indicator Holder M'tg. (2 Req'd)
	RHD-350	Screw, Indicator Holder M'tg. (2 Req'd)
	RHR-920	Washer (Plastic), Indicator Holder M'tg. (2 Req'd)
	RNE-914	Lock Washer, Dial Scale M'tg. (6 Req'd)
	RHG-5-1	Rubber Cushion, Tuning Gang M'tg. (7 Req'd)
	RHG-305	Stand, Cabinet (4 Req'd)
		APPEARANCE
	RYA-2950	Cabinet (Complete)
	RKM-9007	Cabinet Only, Plastic
	RYF-390	Cover (Complete), Cabinet Back
	RYN-200	Cover (Complete), Battery Compartment
	RKE-113	Cover, AC-BATT Selector Switch
	RKH-80	Handle, Cabinet
	RKD-3620	Scale, Dial
	RGC-910	Escutcheon
	RGM-1740	Metal Grille
	RGT-1013	Name Plate
	RGB-318	Badge, NATIONAL PANASONIC Mark
	RGX-460	Ornament, Right Side of Cabinet Front
	RGK-301	Indicating Plate, TUNING, TREBLE, BASS, VOLUME Mark
	RGK-302	Indicating Plate, Hi-Fi SOUND DELUXE Mark
	RGK-303	Indicating Plate, LIGHT Mark
	RGK-304	Indicating Plate, Band Indicator
	RGE-9001-2	Time Table
	RGK-372	Indicating Plate, Voltage Indicator
	RBN-191	Knob, Fine Tuning, Treble, Bass, Volume
	RBT-137	Knob Tuning
	RBS-7-4	Knob, Selector
	RDH-249	Dial Back Plate
	RDR-233	Pointer, Dial
	RSA-17-1	Frame Antenna
	R-111D	Tuning Indicator

AC ADAPTOR

MODEL RD-9430

FOR RADIO MODEL R-100

SPECIFICATIONS

Input Voltage:	AC 50 or 60c/s 110V/200V/225V/250V
Output Voltage:	DC 9V
Maximum Current:	300mA
Power Consumption:	7VA
Dimensions:	60 (Wide) × 70 (High) × 71 (Deep) mm (2 11/32″ × 2 3/4″ × 2 13/16″)
Weight:	700g. (1½ lb.)

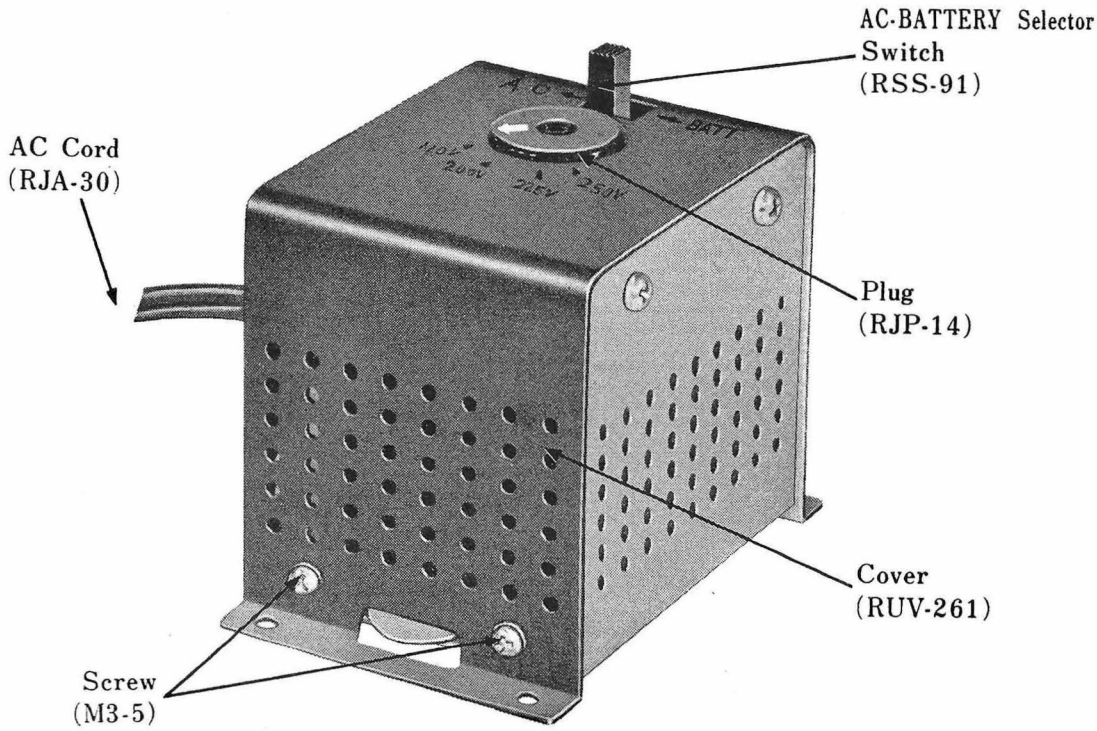

Fig. 9 Appearance - Parts Identification.

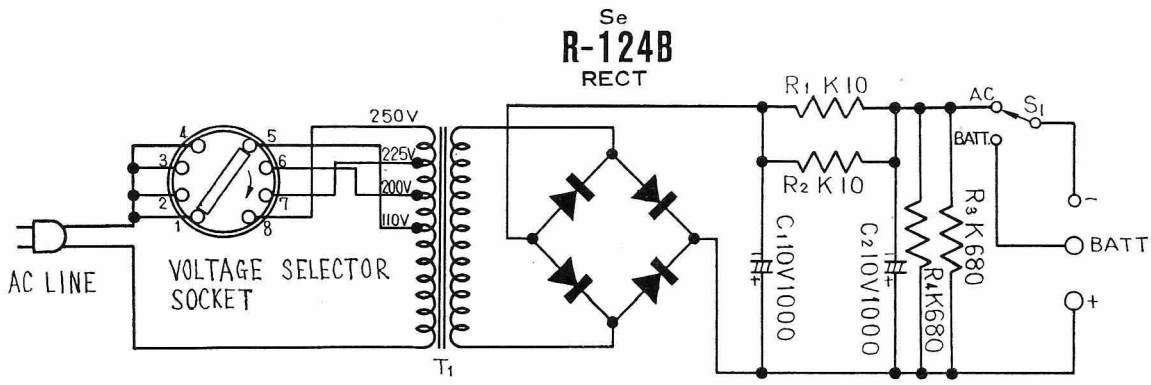

1. S_1 : AC-BATTERY selector switch in "AC" position.
2. Tolerance Mark.
   K=±10%
3. All resistor values in ohms (K=1000Ω).
4. All capacitor values in micro farads (P=μμF).

Fig. 10 Schematic Diagram.

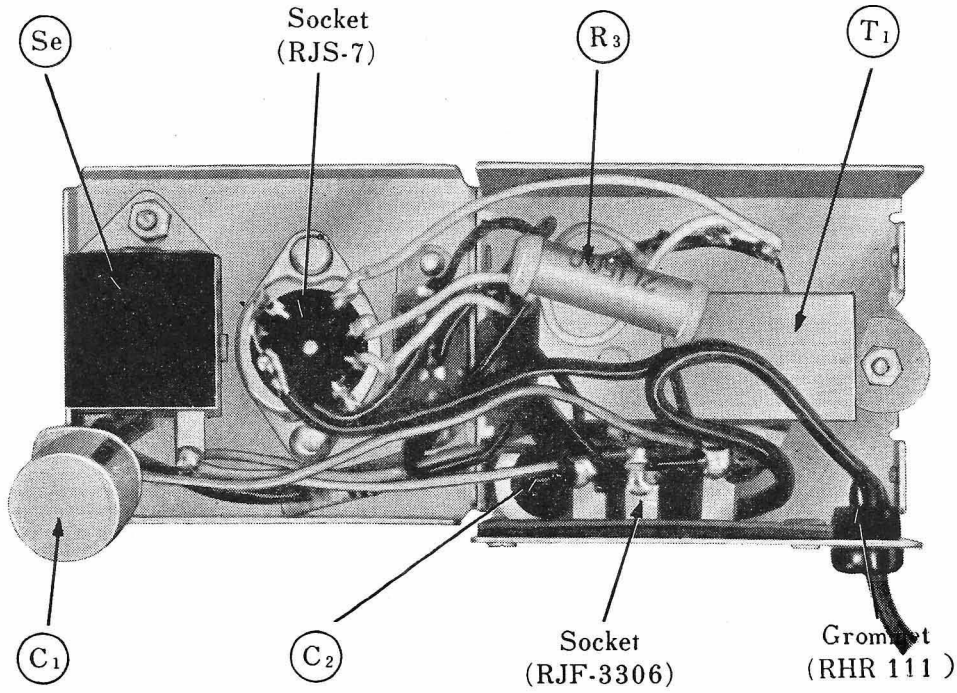

Fig. 11 Component View - Parts Identification.

REPLACEMENT PARTS LIST

MODEL RD-9430

Ref. No.	Part No.	Description
		SELENIUM
Se	R-204B	Rectifier
		CAPACITOR
C_1, C_2	ECE-A10V1000H	1000μF, 10WV, Electrolytic
		RESISTORS
R_1, R_2 R_3, R_4	ERD-14TK100 ERD-14TK681	10Ω, ¼Watt, ±10%, Carbon 680Ω, ¼Watt, ±10%, Carbon
		TRANSFORMER
T_1	RLT-5K11	Power Transformer
		SWITCH
S_1	RSS-91	AC-BATTERY Selector Switch
		APPEARANCE & MISCELLANEOUS
	RJP-4-1 RJP-14 RJP-58 or RJP-62 RJP-9014 RUV-15-1 RJS-7 RJA-30 RJF-3306 RUV-261 RHR-111 M3-5	Plug, Power Source Plug, Voltage Selector Plug, AC Cord Plug, EXT Power Source Cover, AC-BATTERY Selector Switch Socket Voltage Selector AC Cord, Power Source Socket, Power Source Cover, Adaptor Grommet, AC Cord Screw, Cover M'tg. (RUV-261)

PRINTED IN JAPAN

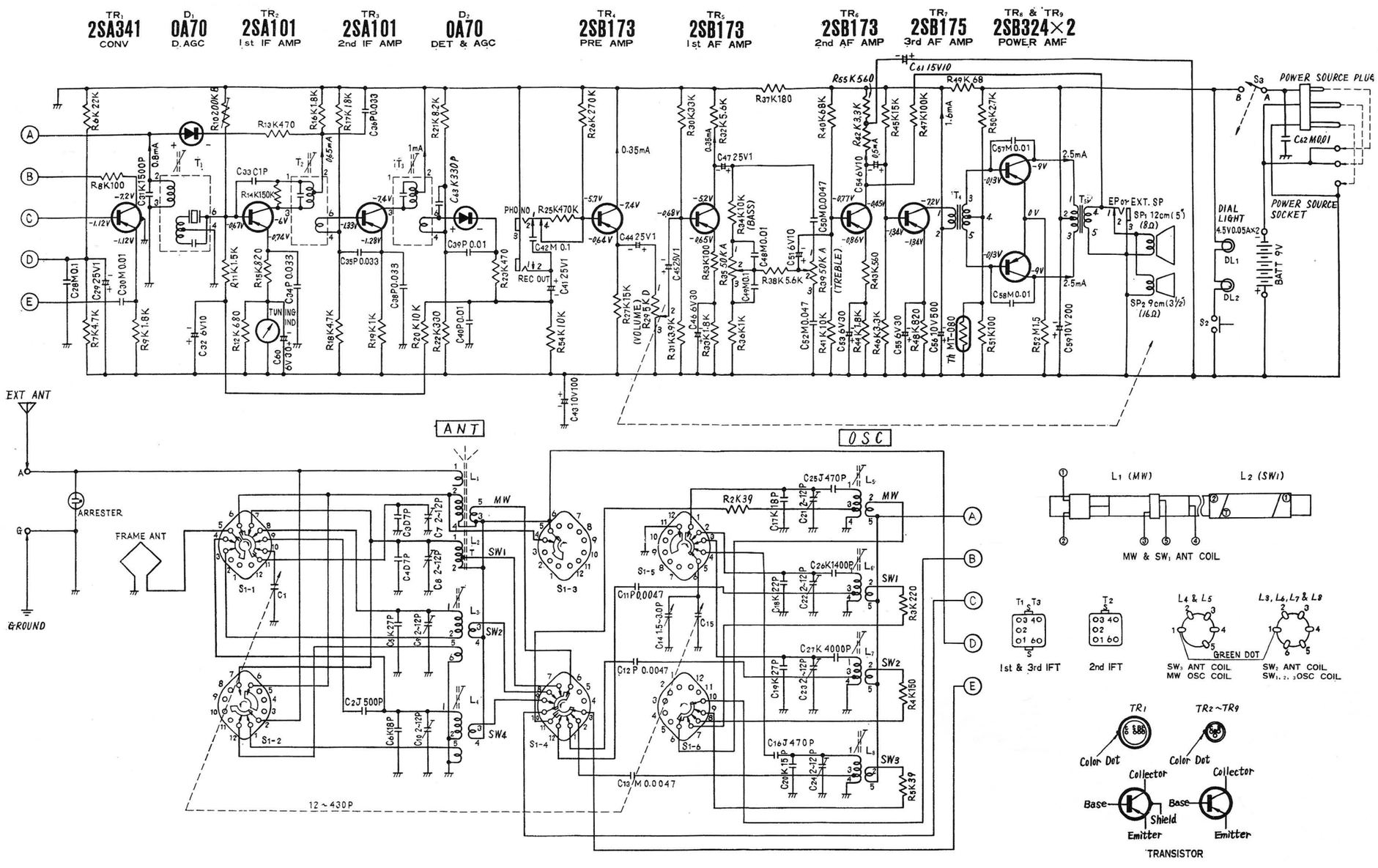

Notes:

1. S_{1-1}~S_{1-6}: Band selector switch in "MW" position.
2. S_2: Dial light switch in "OFF" position.
3. S_3: Power source switch in "OFF" position.
4. DC voltage measurements are taken with circuit tester 10KΩ/Volt from positive terminal of battery.
5. Capital letters (J,K,M,P,C,D) in the circuit diagram show allowable tolerances of resistors and capacitors as follows:
   J=±5% K=±10% M=±20% P=+100% − 0% C=±0.25PF
   D=±0.5PF
6. Battery current: No signal 15mA
   Maximum output 250mA
7. PF=pico farad=mmf
   μF=micro farad=MF
8. All resistor values in ohms (K=1000Ω).
9. All capacitor values in micro farads (P=μμF).

Fig. 6 Schematic Diagram.

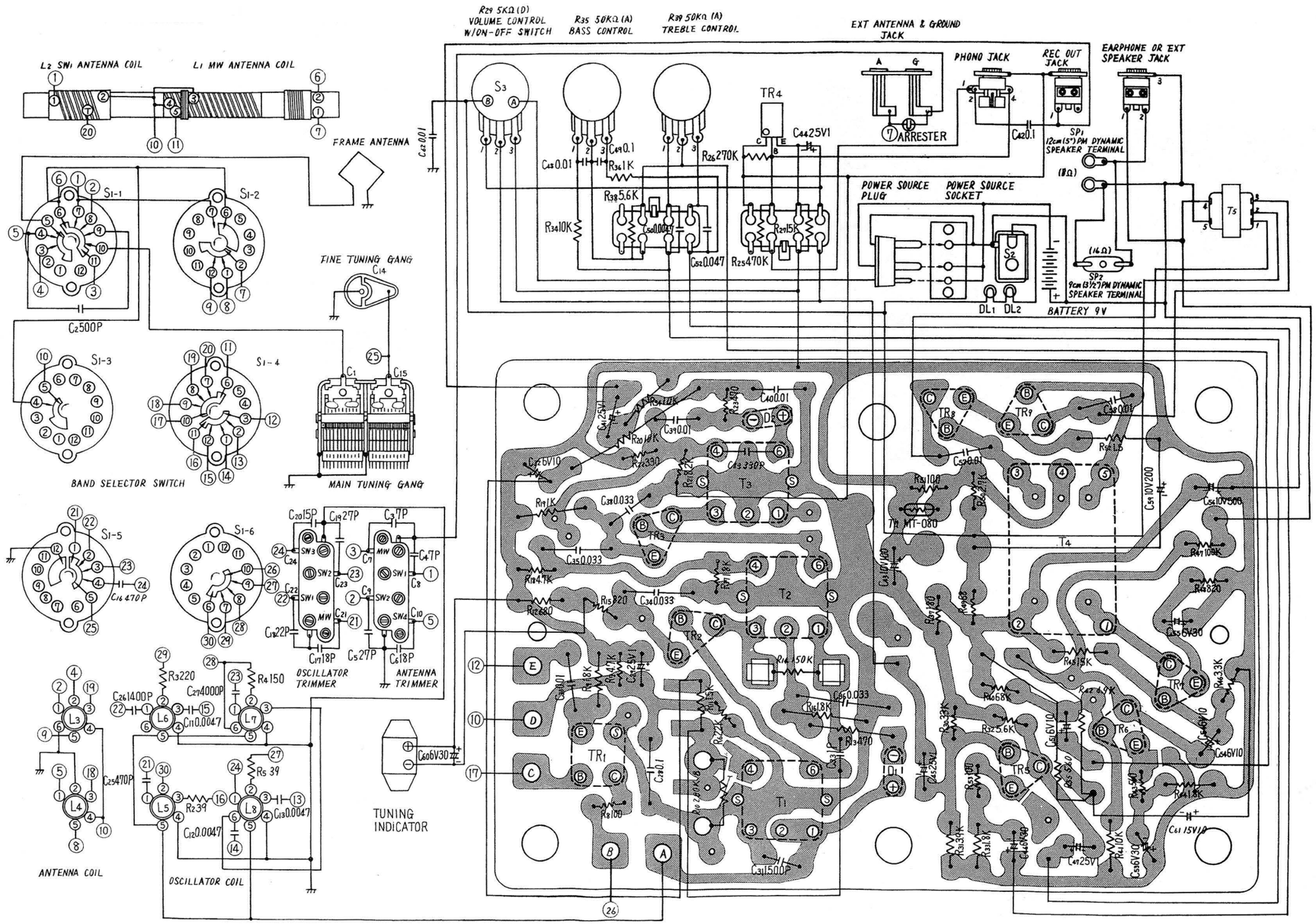

Notes :

1. All resistor values in ohms (K=1000Ω).
2. All capacitor values in micro farads (P=μμF).

Fig. 7 Circuit Board Wiring View (Conductor Side).