Recorders N2218/45C

Service
Service
Service

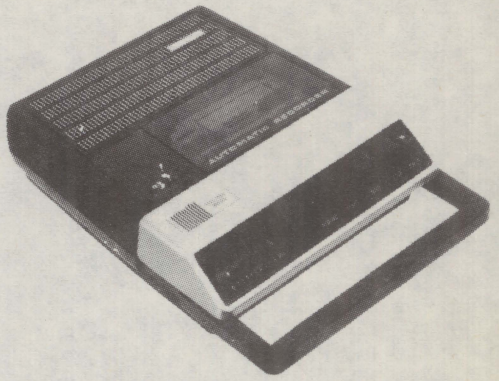

Service Manual

This Service Manual describes the differences between the N2218/45 and the N2218/45c

Subject to modification

PHILIPS

Recorders N2218/45C

Service
Service
Service

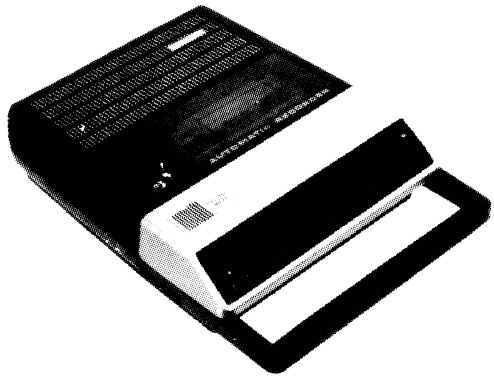

Service Manual

This Service Manual describes the differences between the N2218/45 and the N2218/45c

Subject to modification

PHILIPS

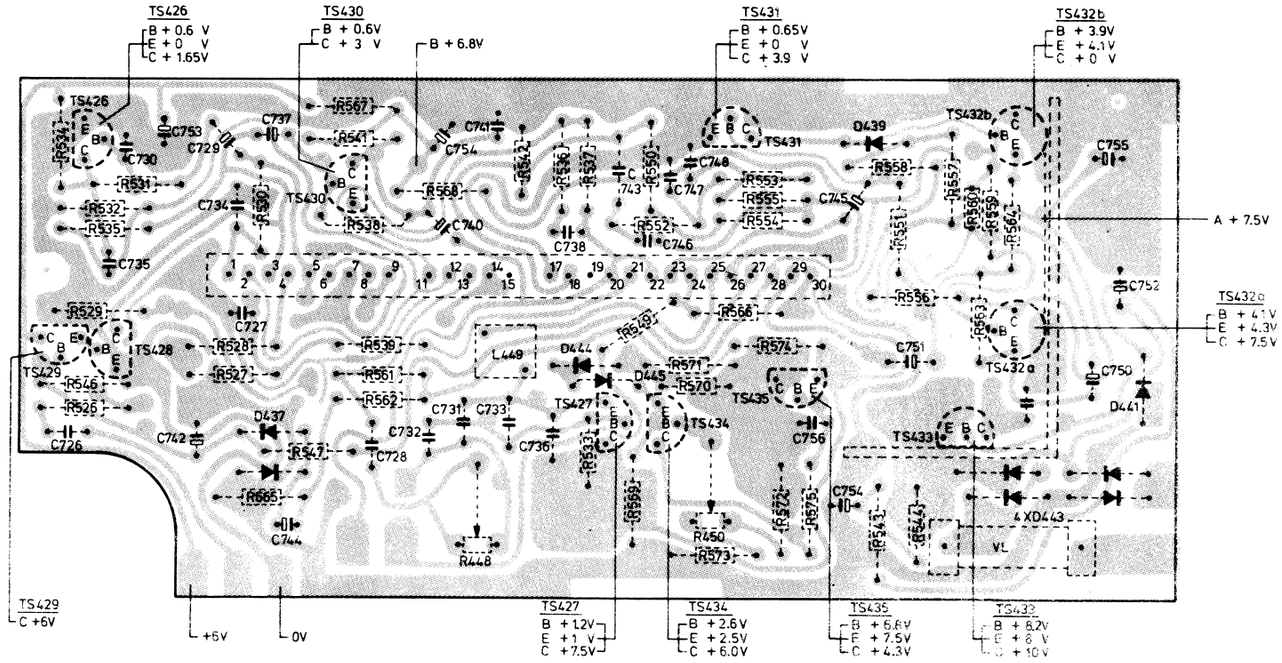
TS426
B + 0.6 V
E + 0 V
C + 1.65V
TS430
B + 0.6V
C + 3 V
B + 6.8V
TS431
B + 0.65V
E + 0 V
C + 3.9 V
TS432b
B + 3.9V
E + 4.1V
C + 0 V
A + 7.5V
TS432a
B + 4.1V
E + 4.3V
C + 7.5V
TS429
C +6V
+6V
0V
TS427
B + 1.2V
E + 1 V
C +7.5V
TS434
B + 2.6V
E + 2.5V
C + 6.0V
TS435
B + 6.8V
E + 7.5V
C + 4.3V
TS433
B + 8.2V
E + 8 V
C + 10 V

| | | |

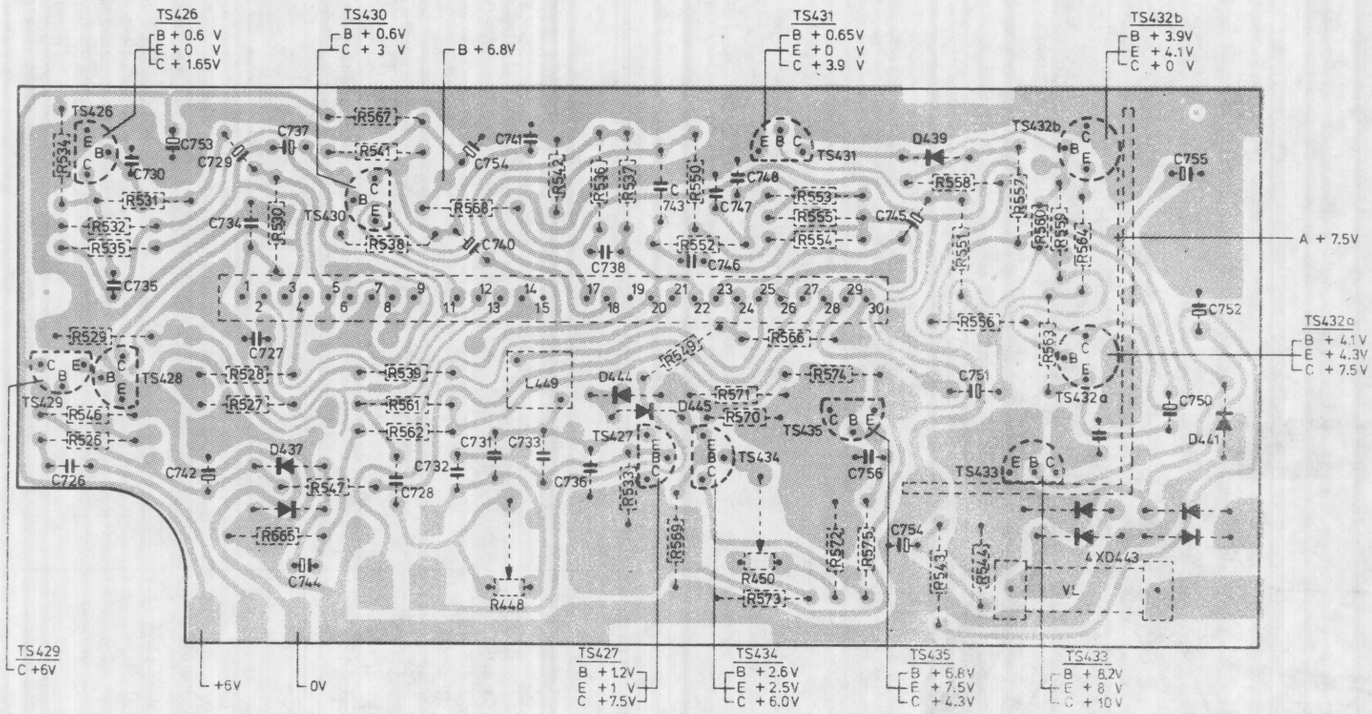
TS426
B + 0.6 V
E + 0 V
C + 1.65V
TS430
B + 0.6V
C + 3 V
B + 6.8V
TS431
B + 0.65V
E + 0 V
C + 3.9 V
TS432b
B + 3.9V
E + 4.1V
C + 0 V
A + 7.5V
TS432a
B + 4.1V
E + 4.3V
C + 7.5V
TS429
C +6V
+6V
0V
TS427
B + 1.2V
E + 1 V
C + 7.5V
TS434
B + 2.6V
E + 2.5V
C + 6.0V
TS435
B + 6.8V
E + 7.5V
C + 4.3V
TS433
B + 8.2V
E + 8 V
C + 10 V

| | | |

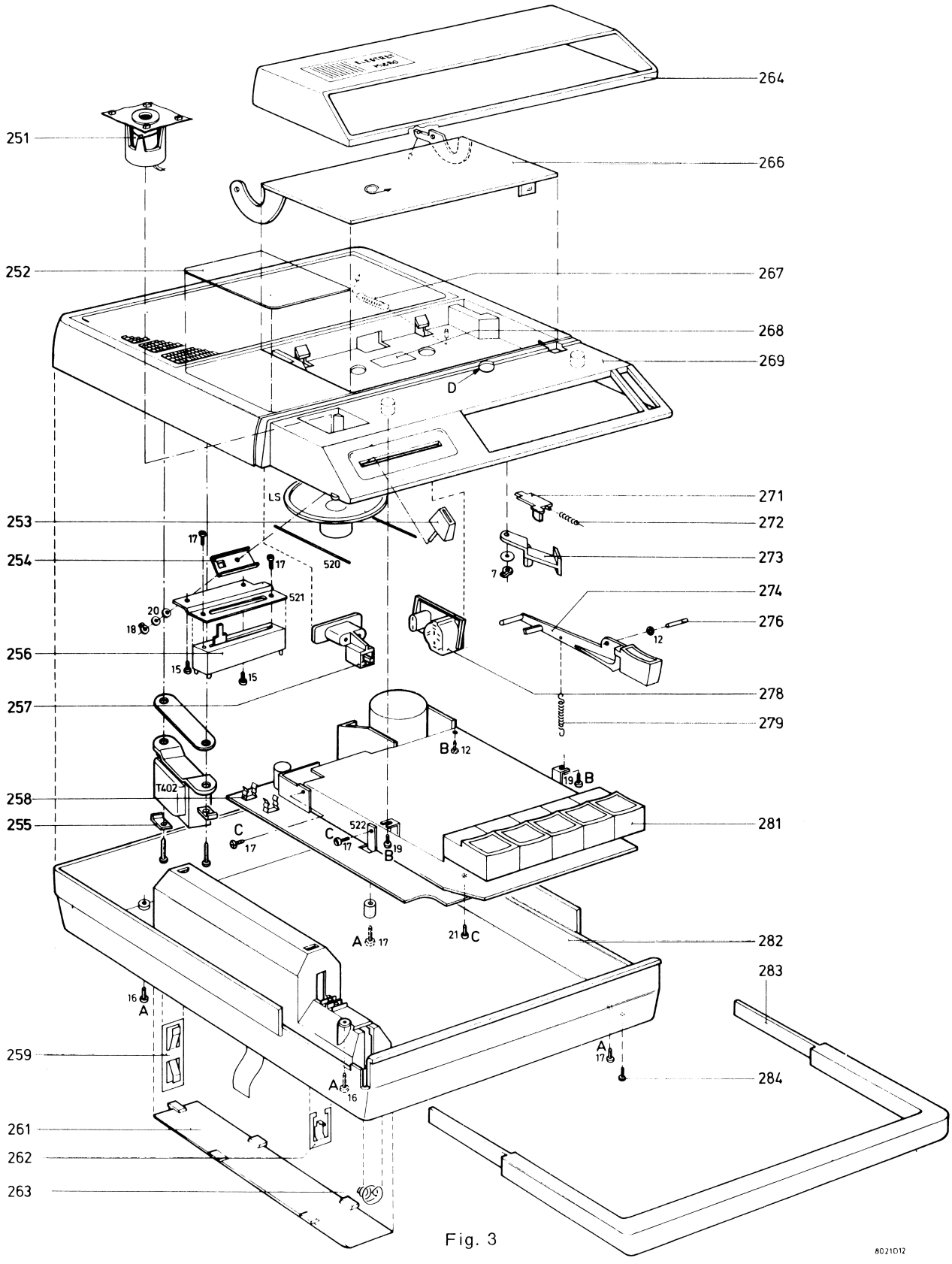

LIST OF CABINET PARTS

7	4822 530 70115	251	4822 242 10017	262	4822 492 61309	274	4822 403 50879
12	4822 532 10332	252	4822 454 20327	263	4822 492 61308	276	4822 535 90949
15	4822 502 30001	253	4822 411 60284	264	4822 443 60457	278	4822 403 30233
16	4822 502 30085	254	4822 403 30232	266	4822 443 60434	279	4822 492 31151
17	4822 502 10951	255	4822 403 50878	267	4822 492 31149	281	4822 410 21719
18	4822 530 70114	256	4822 105 10098	268	4822 460 20120	282	4822 443 50237
19	4822 502 30085	257	4822 267 30265	269	4822 443 60501	283	4822 498 40352
20	4822 532 10694	258	4822 256 30139	271	4822 403 50791	284	4822 462 40323
21	4822 502 11059	259	4822 492 61311	272	4822 492 51049		
22	4822 502 30081	261	4822 443 60436	273	4822 403 30232		

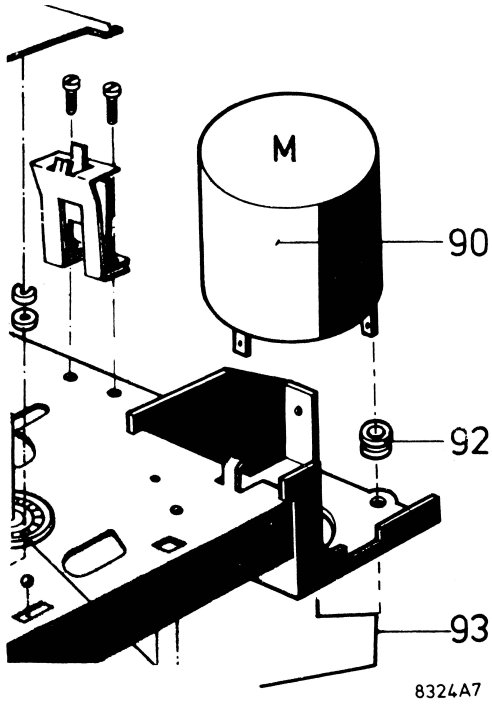

Fig. 4

LIST OF ELECTRICAL PARTS

TS426	BC549B	4822 130 40936
TS427	BC338/25	4822 130 40958
TS428,431	BC548B	4822 130 40937
TS429	BC548A	4822 130 40948
TS430	BC548C	5322 130 44196
TS432A-B	AC187/188	5322 130 40347
TS433	BC738/16	4822 130 41081
TS434	AC127	5322 130 40096
TS435	BC328	5322 130 44104
D437,438	BA316	4822 130 30302
D439,444, 445	BA315	4822 130 30843
D441	BZX79/C8V2	5322 130 34119
D443	1N4001	5322 130 30197
C729,735, 740	1.5 μF, 64 V	4822 124 20492
C737,744	0.64 μF, 64 V	4822 124 20609
C742,753, 755	100 μF, 10 V	4822 124 20462
C745	2.2 μF, 40 V	4822 124 20482
C750	47 μF, 10 V	4822 124 20461
C751,755	470 μF, 10 V	4822 124 40127
C752	1000 μF, 10 V	4822 124 20513
C757	10 μF, 16 V	4822 124 20475

R448	Potmeter 10 kΩ	4822 100 10035
R450	Potmeter 100 Ω	4822 100 10075
R460	NTC 130 Ω	4822 116 30016
L449		4822 156 20459
LS403		4822 240 30101
T402		4822 145 30132
T402	.../15	4822 145 30153
-Miscellaneous-		
BU1-BU2		4822 267 20162
BU3		4822 267 30265
K1		4822 249 10032
K2		4822 249 40068
SK1		4822 277 30582
SK2		4822 278 90223
	Mains cord	4802 321 17024
409		4822 242 10017
Z405		4822 253 30016
92		4822 325 60038
93	Fig. 4	4822 492 61989
90		4822 361 20115

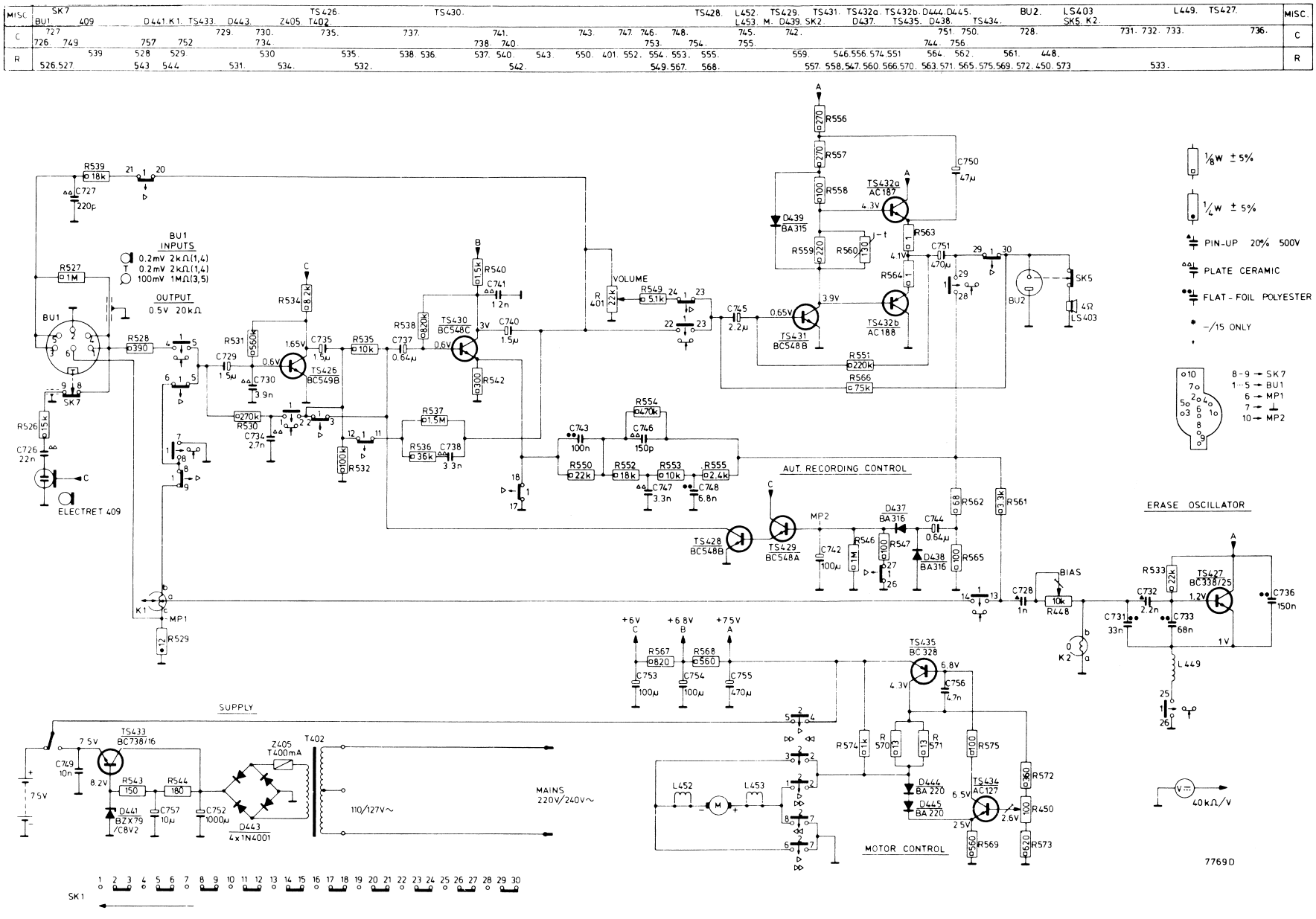
MISC
C
R
1/8W ± 5%
1/4W ± 5%
PIN-UP 20% 500V
PLATE CERAMIC
FLAT-FOIL POLYESTER
-/15 ONLY
8-9 → SK7
1-5 → BU1
6 → MP1
7 → ⏚
10 → MP2
BU1
INPUTS
0.2mV 2kΩ(1,4)
0.2mV 2kΩ(1,4)
100mV 1MΩ(3,5)
OUTPUT
0.5V 20kΩ
ELECTRET 409
VOLUME
AUT. RECORDING CONTROL
ERASE OSCILLATOR
BIAS
SUPPLY
MOTOR CONTROL
MAINS
220V/240V~
110/127V~
40kΩ/V
SK1
7769D

Fig. 1