RECORDERS N2000

00/22

SERVICE MANUAL

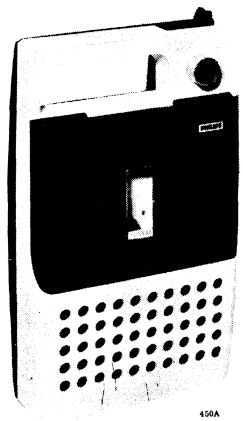

TECHNICAL DATA

Tape speed	: 4.76 cm/sec (1 7/8 i.p.s.)
Power supply	: 9 V d.c. (6xR14TR)
Output power	: 500 mW (d = 10 %)
Loudspeaker	: 4822 240 30047 (8 Ω)
Max. current drain	: 95 mA without cassette

LIST OF CABINET PARTS

51	4822 410 21227	Switch knob
52	4822 413 50792	Knob
	4822 532 10284	Retaining ring for knob
53	4822 443 60396	Cover
54	4822 443 50199	Bottom plate
55	4822 443 60395	Battery lid

LIST OF MECHANICAL PARTS

56	4822 460 20088	Cover strip
57	4822 403 50676	Bracket
58	4822 528 60077	Flywheel
59	4822 520 10239	Pivot bearing
60	4822 403 20097	Bracket
61	4822 492 61274	Stop spring
62	4822 528 90132	Roller
63	4822 403 40047	Bracket
64	4822 358 30128	Belt
65	4822 479 30045	Brush
66	4822 240 30047	Loudspeaker
67	4822 466 30025	Motor housing
68	4822 532 70078	Rubber ring
69	4822 462 40288	Rubber grommet
70	4822 361 20061	Motor
71	4822 526 10085	Ferrite bead
72	4822 528 70244	Idler wheel
73	4822 492 61814	Wire spring
74	4822 492 61694	Battery spring
75	4822 528 10271	Wheel
76	4822 528 70243	Idler wheel
77	4822 492 61815	Wire spring
78	4822 528 90227	Pulley
79	4822 528 10271	Wheel
80	4822 214 30139	Printed circuit board
81	4822 492 61311	Battery spring
82	4822 492 61816	Battery spring
83	4822 265 20098	Socket
84	4822 528 20173	Felt disc
85	4822 528 20174	Wheel
86	4822 492 50995	Pressure spring
87	4822 532 10649	Spring cup
88	4822 528 90226	Spindle
89	4822 532 50916	Ring
90	4822 492 50516	Pressure spring
91	4822 520 10239	Carrier
92	4822 528 90225	Spindle
93	4822 492 50652	Pressure spring
94	4822 502 10857	Screw
95	4822 249 10032	Head
96	4822 532 50268	Ring
97	4822 403 40048	Pinch roller assy.
98	4822 492 90003	Tension spring
99	4822 278 90008	Switch
100	4822 492 31047	Tension spring
101	4822 492 31046	Tension spring
102	4822 492 40496	Wire spring
103	4822 492 50731	Pressure spring
104	4822 492 61275	Ω spring

PHILIPS

PHILIPS INDUSTRIES LIMITED

Branches in all States

MAY 1972

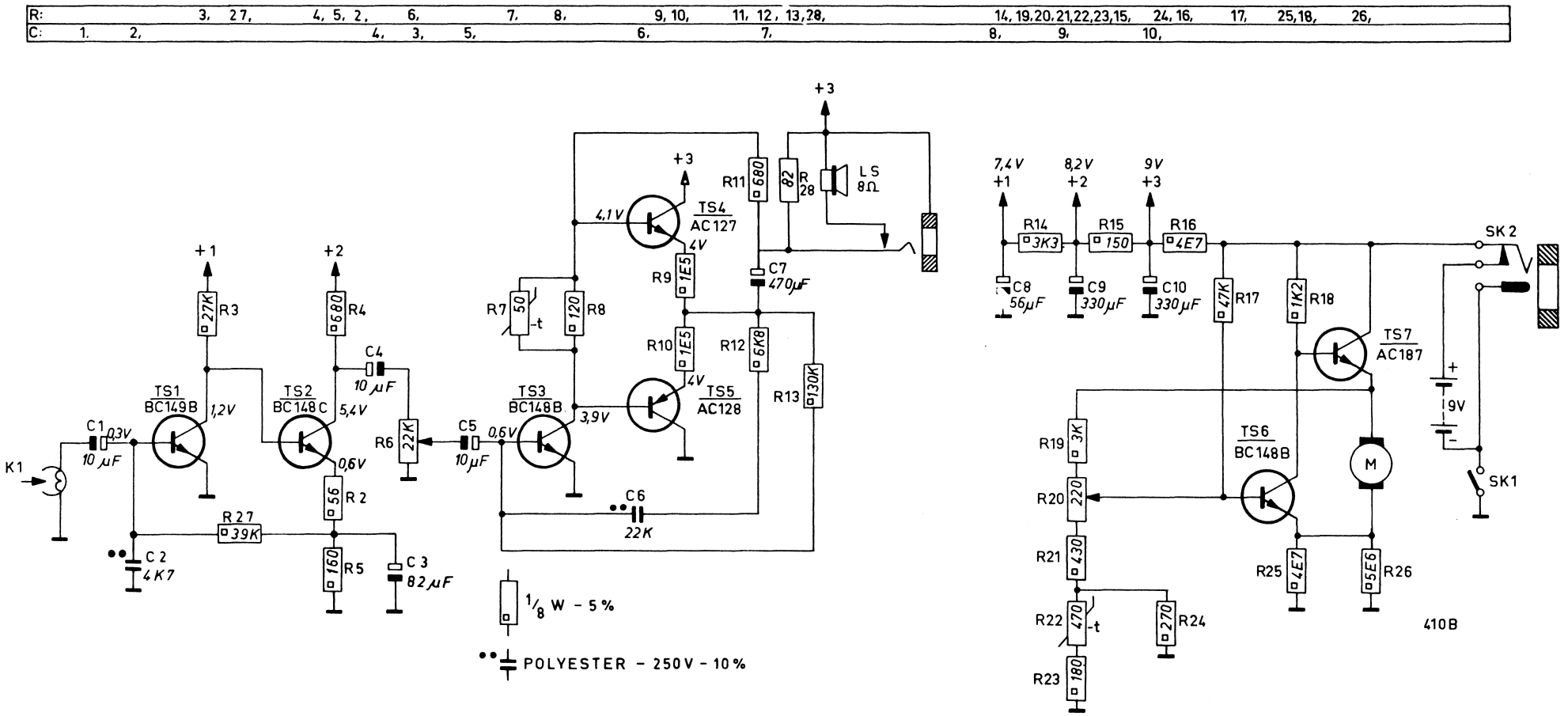

LIST OF ELECTRICAL PARTS

TS1	BC149B	4822 130 40313	R6	22 kΩ	4822 101 30118
TS2	BC148C	4822 130 40361	R7	50 Ω N.T.C.	4822 110 30008
TS3	BC148B	4822 130 40318	R20	220 Ω	4822 100 10026
TS4	AC127	4822 130 40382	R22	470 Ω N.T.C.	4822 116 30017
TS5	AC128		C1, C4, C5	10 µF 25 V	4822 124 20355
TS6	BC148B	4822 130 40318	C3	82 µF 4 V	4822 124 20378
TS7	AC187	4822 130 40314	C7	470 µF 6,3 V	4822 124 20405
			C8	56 µF 10 V	4822 124 20373
			C9, C10	330 µF 10 V	4822 124 20402

Adjusting the head 95

The head is adjusted with the aid of the 6300 Hz test signal on test cassette 8945 600 11501.
Adjust for max. output voltage with screw 94, to be measured on the loudspeaker terminals or the earphone connection.
After adjustment, lock-paint screw 94.
In position Play the head should project 3.55 mm into the cassette. This can be checked by removing cassette lid 53 and by inserting a cassette from which the part over the head has been removed. Adjustment is effected by slightly loosening 1 leaf spring 61 and positioning this spring.

Adjusting the tape speed

During playback at the correct tape speed (4.76 cm/sec) the test cassette 8945 600 11501 will supply an 800 Hz signal every 100 secs.
The tape speed can be adjusted with R20. The interval between two subsequent 800 Hz signals must be between 95 and 103 secs.

Checking the winding friction

The torque of the winding friction should be between 30 and 50 gcm. When wheel 75 is blocked in position Play without cassette, this corresponds to an increase in current consumption between 12 and 20 mA. Minor deviations can be eliminated by bending spring 86. In other cases felt disc 84 must be replaced.

Various adjustments

The axial play of the flywheel should be between 0.1 and 1 mm. This can be adjusted by bending bracket 501.
In position Play, pinch roller bracket 97 must have a clearance of at least 0.5 mm to its stop against the tag of bracket 63. This can be adjusted by bending the tag.
In position Play the spindle of idler wheel 72 must have a clearance of at least 0.5 mm to bracket 63. This can be adjusted by bending the bracket locally.
In position Fast Forward and Rewind idler wheel 72 must be pulled clear of the flywheel and friction wheel 85. This can be adjusted by locally bending bracket 63.
In position Fast Forward bracket 60 must be positioned against its stop in the cabinet. This can be adjusted by bending the relevant tag. Spring 102 must then be clear of its stop against bracket 57.

Lubricating Instructions

Ball-bearing grease 4822 389 10001: contact face of roller 62 on bracket 63.
Lubricant 10 - 4822 390 10003: contact faces of brackets 57 and 63.
Hydraulic oil - 4822 390 10048: bearings and shafts.

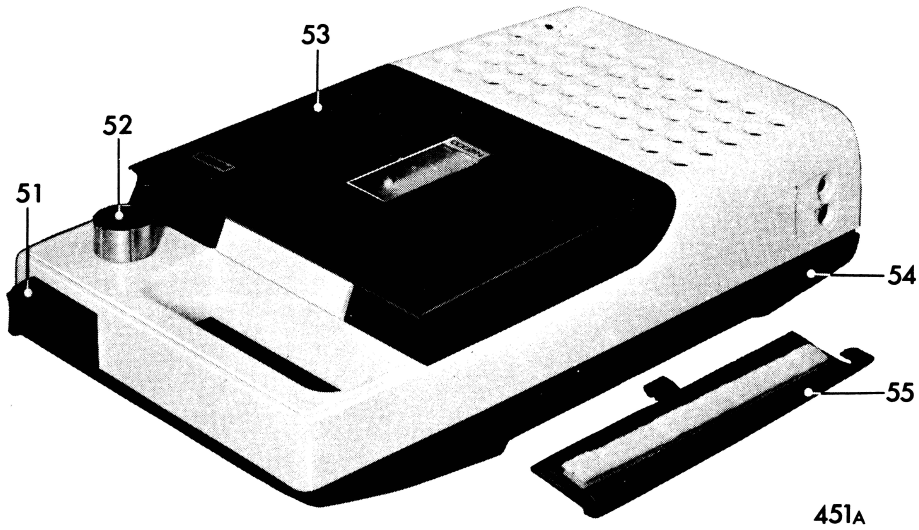

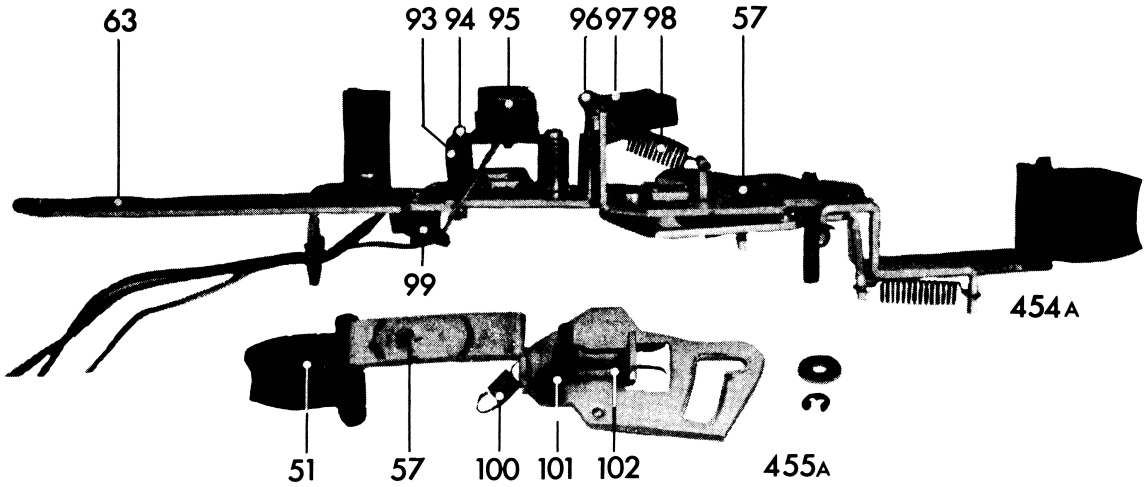

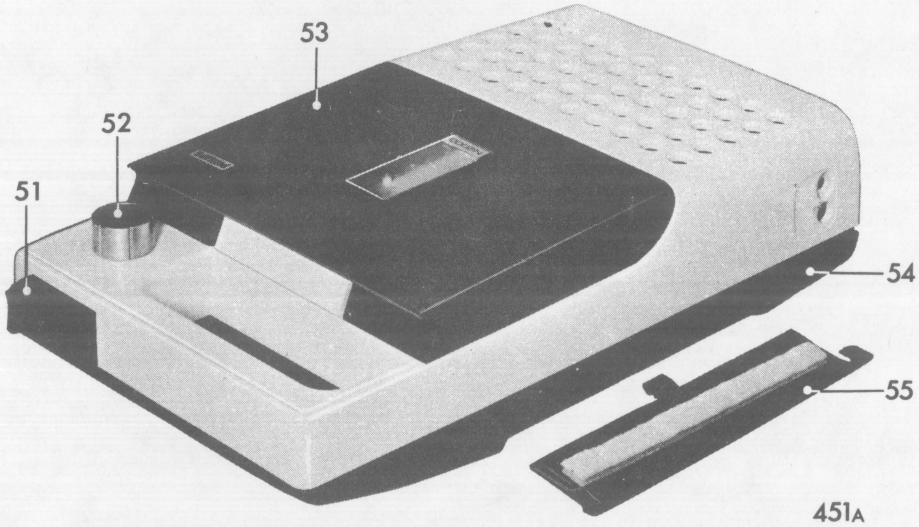
53
52
51
54
55
451A

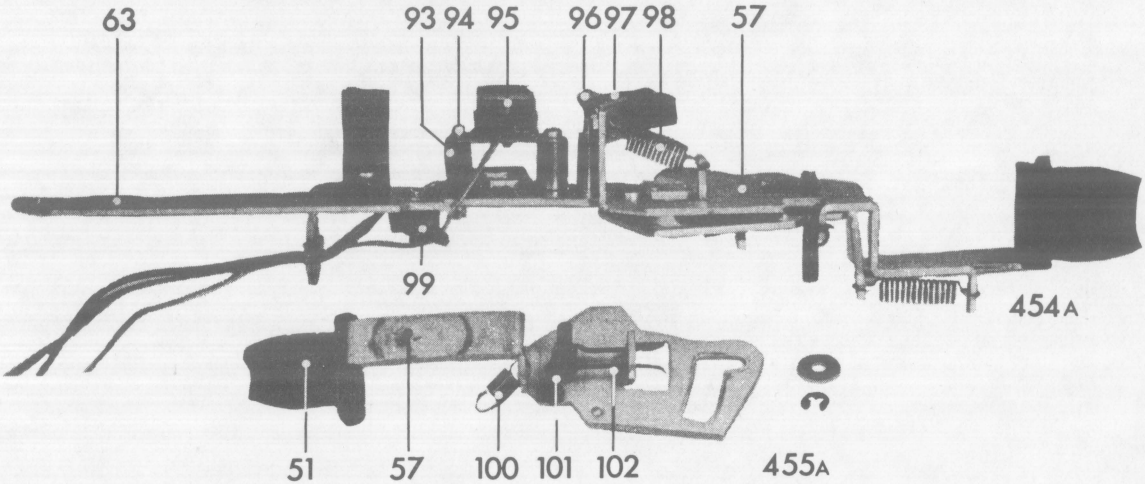
63
93 94 95
96 97 98
57
99
454A
51
57
100
101
102
455A

R:	19, 20, 24, 18, 21, 22, 17, 16, 23, 25, 26, 7, 28, 13, 12, 8, 11, 15, 10, 9, 6, 5, 2, 4, 14, 27, 3,
C:	9, 10, 7, 6, 5, 4, 2, 8, 3, 1,

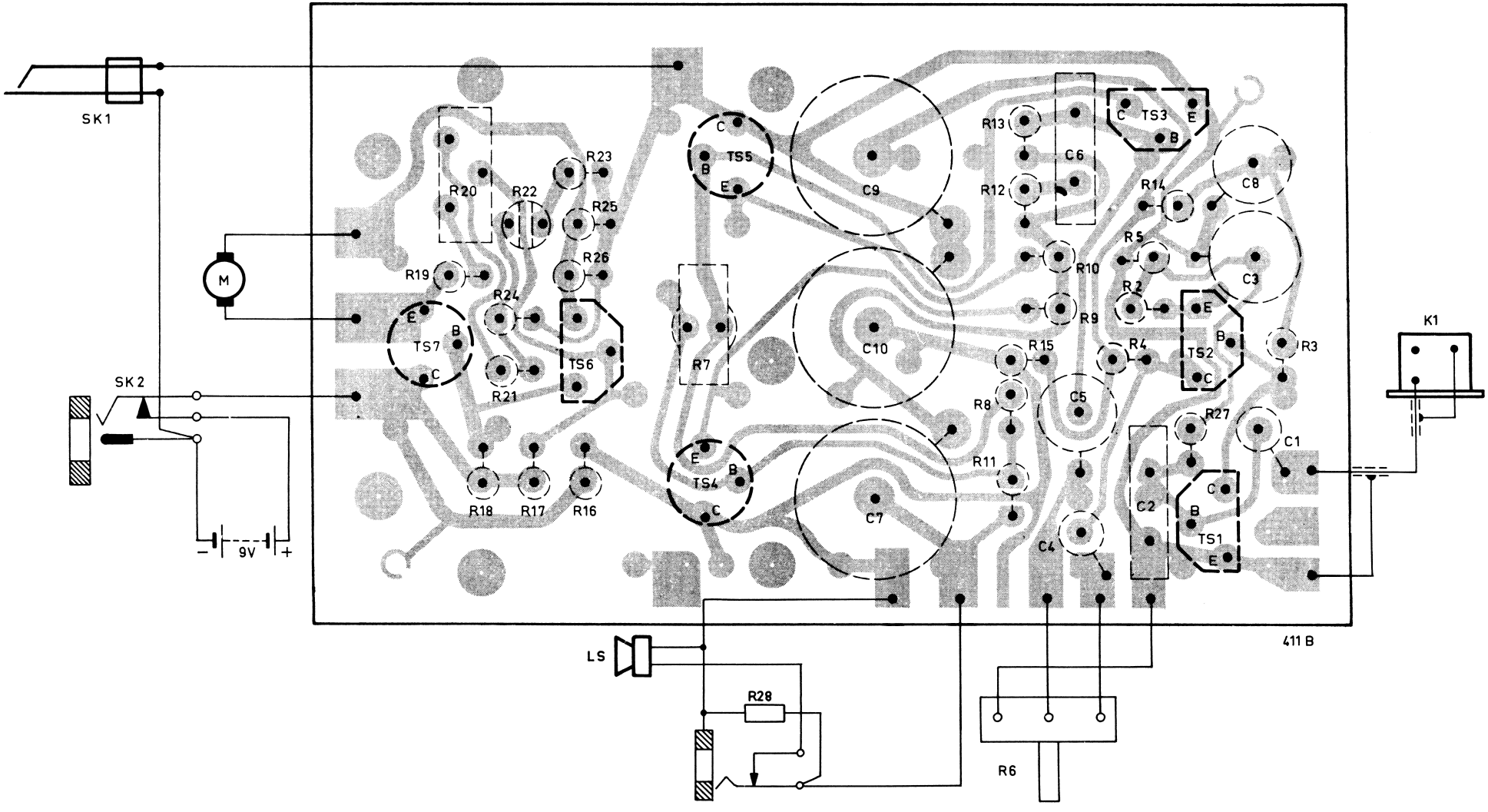

| | | |

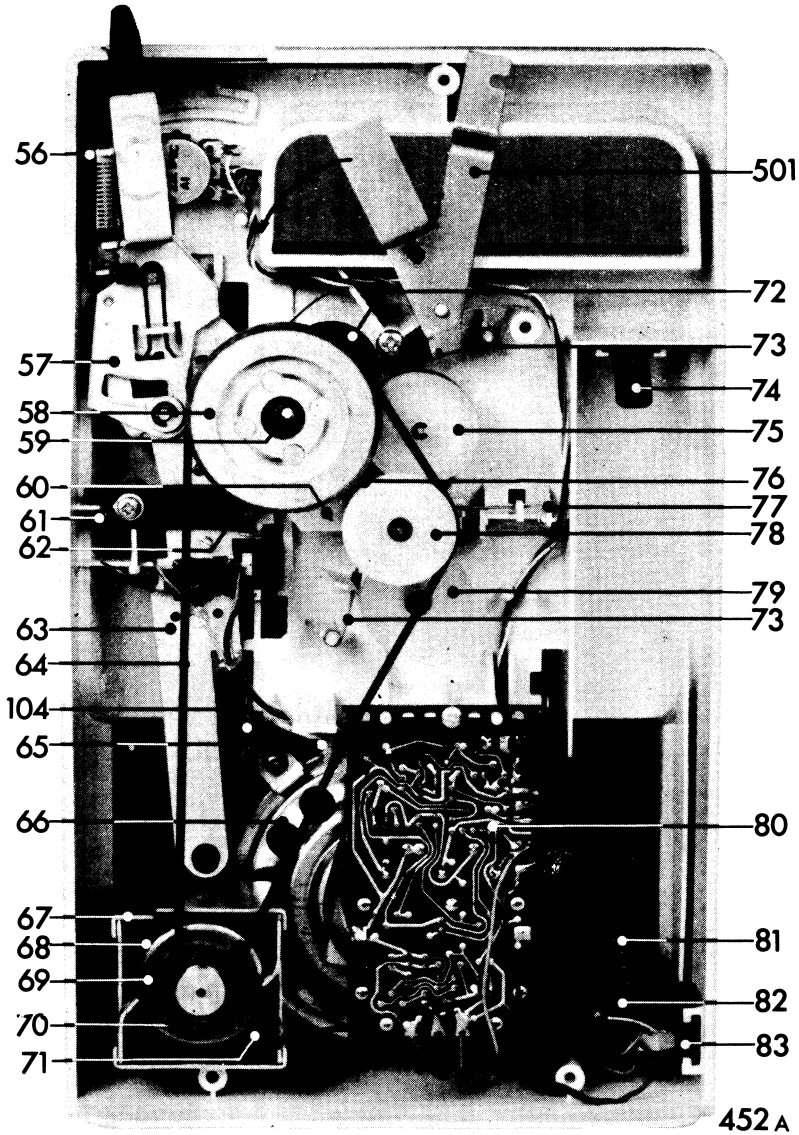
56
501
72
73
57
74
58
75
59
76
60
77
61
78
62
79
73
63
64
104
65
66
80
67
68
81
69
82
70
83
71

452 A

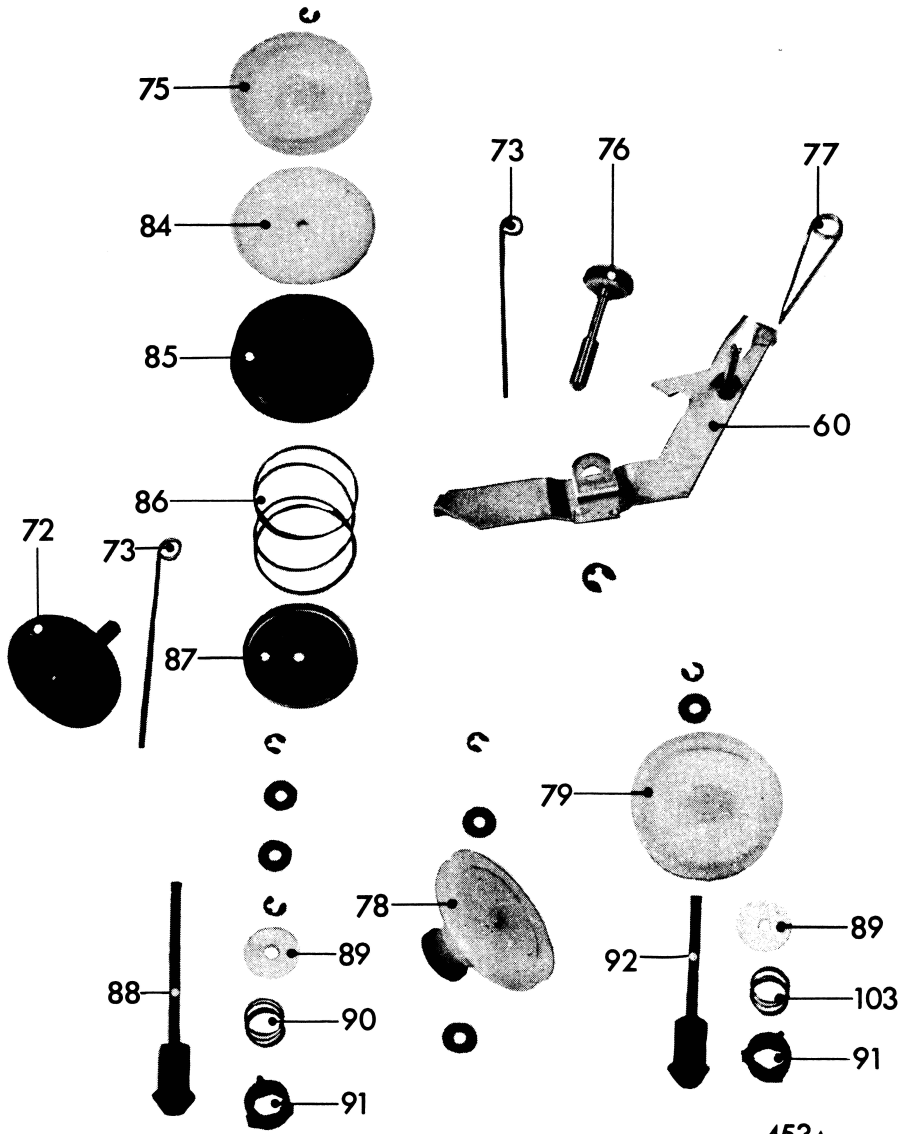
75
73
76
77
84
85
60
86
72
73
87
79
78
89
92
89
88
90
103
91
91

453A

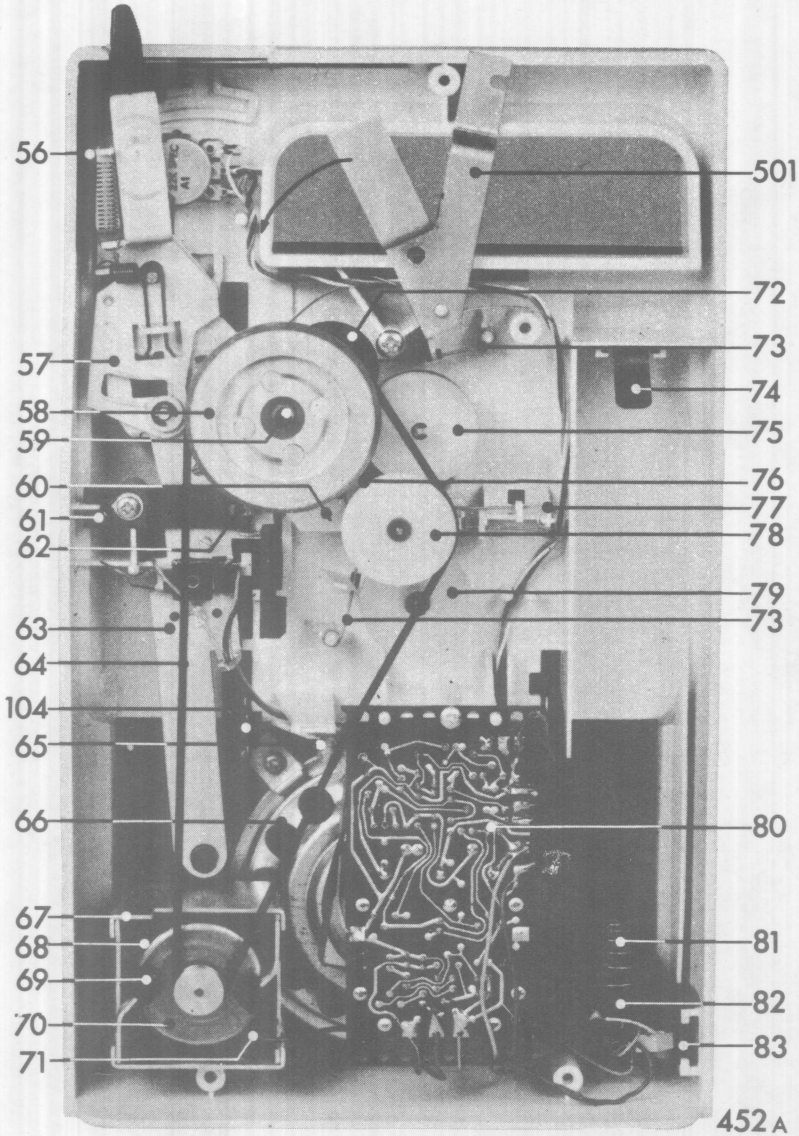
56
501
72
73
57
74
58
75
59
76
60
77
61
78
62
79
73
63
64
104
65
66
80
67
68
81
69
82
70
83
71

452 A

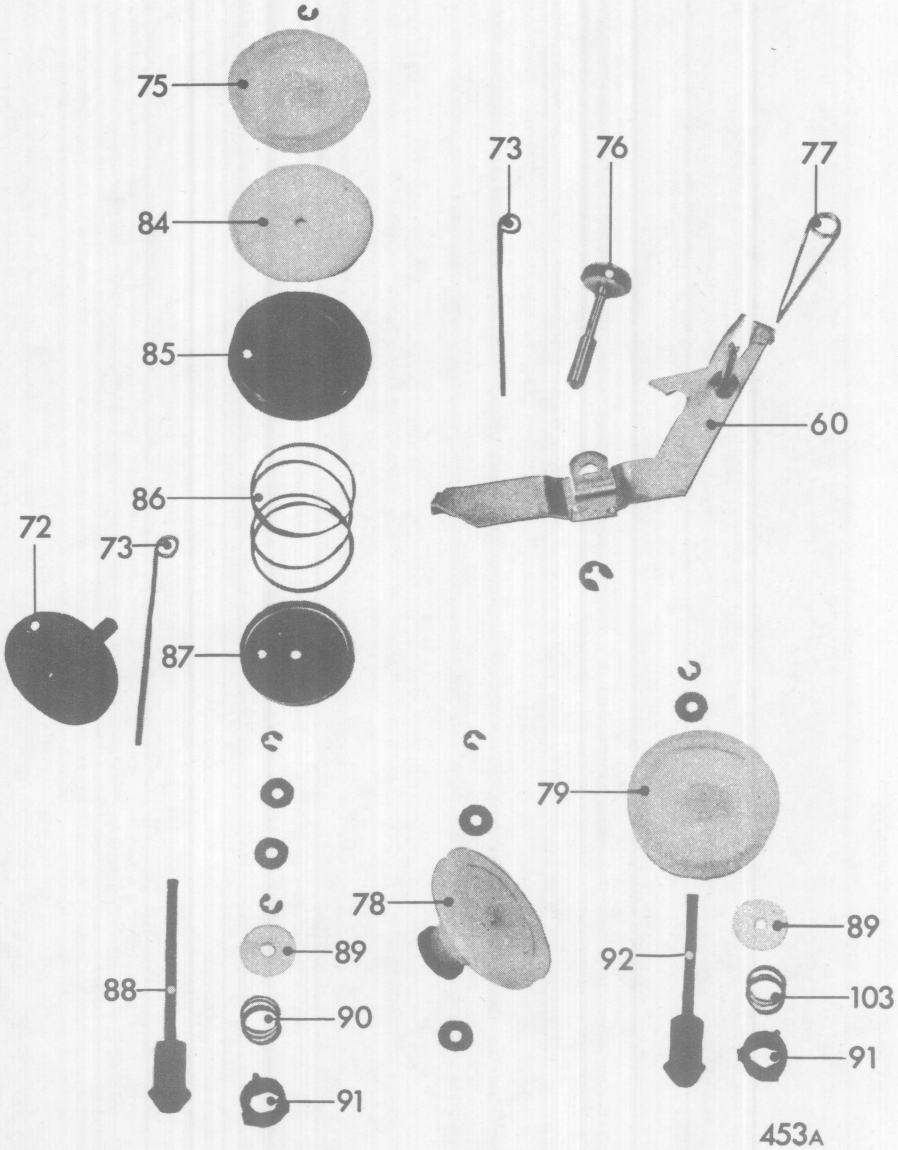
75
84
85
86
87
72
73
73
76
77
60
79
78
89
88
90
91
92
89
103
91

453A