PHILIPS Service notes

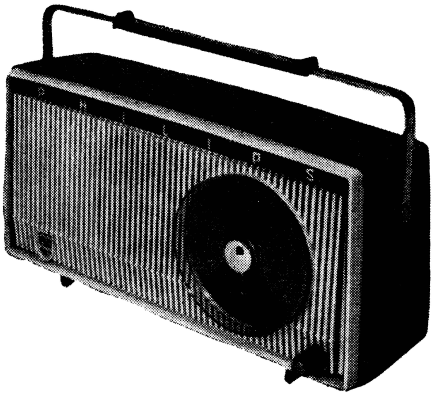

MODEL MT9

Minstrel

SPECIFICATIONS

Tuning range	520-1620 kc/s.
Intermediate frequency	455 kc/s.
Power supply:	
battery	type 276P
mains unit	NP1481
Current consumption	see table below

MODULE REMOVAL

Remove retaining screw and cabinet back from front grille.

The RF module can be checked from the underside by unclipping from the mounting lid and tilting base upwards with leads intact. This module can be readily replaced if necessary at this stage.

The audio module can be checked from the component side but if inspection from the underside or replacement is indicated, it is necessary to raise the common mounting board by first removing the hand span tuning knob and volume knob from their respective shafts and unscrewing 3 mounting screws. Straighten module mounting spills and separate module from mounting board. The audio module can now be readily replaced.

Refitting of modules and common board is a reversal of the foregoing.

ALIGNMENT

The location of the various trimming points used in alignment is shown on circuit and interconnection drawings.

I.F. Alignment

Connect signal generator via I.F. dummy to base of TR1. Put volume control to maximum. Detune IFT's by screwing out cores about one turn. Peak cores in the following order—I.F.T.3, I.F.T.2, I.F.T.1.

R.F. Alignment

Connect signal generator via a coupling loop around the rod aerial assembly. Put volume control at maximum. Fully close the tuning capacitor and position the dial pointer to the stop mark on the dial scale. Peak oscillator coil core at 520 kc/s. Fully open tuning capacitor and peak oscillator trimmer at 1620 kc/s. Repeat these two operations until band end setting is correct.

Tune to 600 kc/s. (7ZL) and adjust aerial coil for maximum output. Tune to 1500 kc/s. (3AK) and adjust aerial trimmer for maximum output. Repeat these two operations for correct tracking.

OUTPUT TRANSISTOR ADJUSTMENT

Provision is made by means of metering points for easy insertion of a meter for adjustment of output transistor current by means of R108. Current should be adjusted, at no signal, in accordance with the following table. This table includes total receiver currrent.

Temp. °F.	TR103/104 Current mA	Receiver Current mA
50	2.0	12.8
55	2.2	13.0
60	2.4	13.25
65	2.6	13.5
70	2.8	13.9
75	3.0	14.25
80	3.25	14.6
85	3.5	15.0
90	3.75	15.5
95	4.0	15.9
100	4.3	16.3
105	4.6	16.8
110	4.9	17.4
115	5.3	18.0

August, 1965

Published by Philips Electrical Pty. Ltd., Australia

Branches in all States

MT9

| | | |

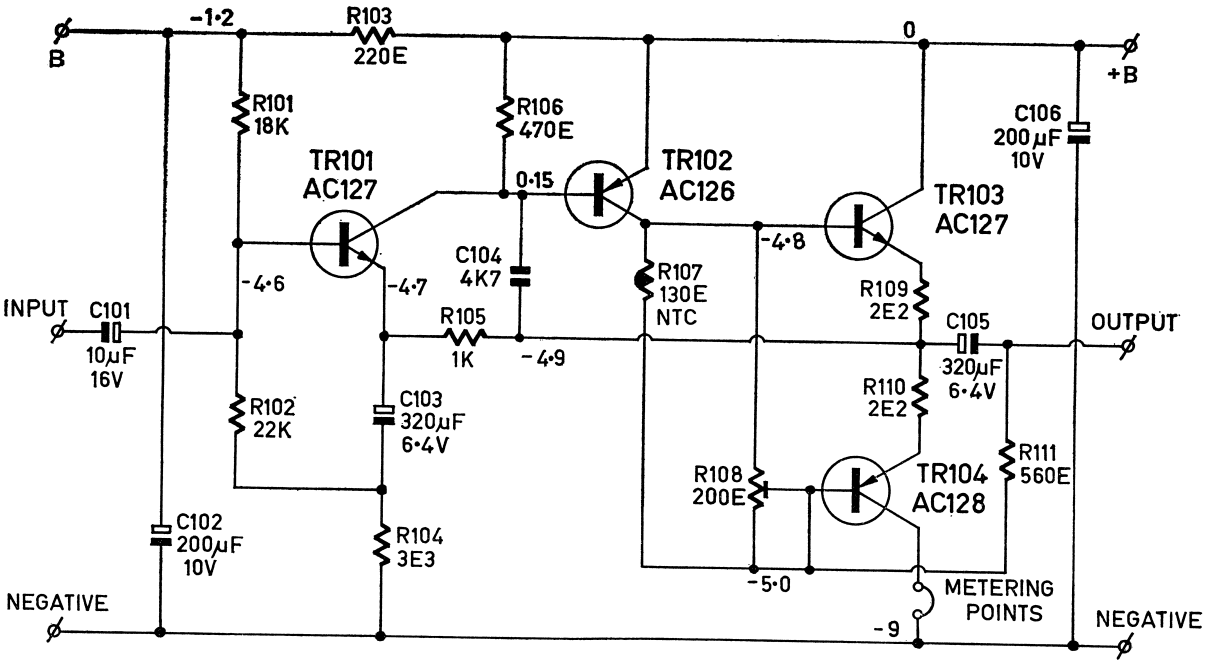

NOTE ON CONDENSERS:
WHOLE NUMBERS-pF UNLESS INDICATED OTHERWISE.
TOLERANCE POLYESTERS: ± 10%
TOLERANCE ELECTROLYTICS: -10+50%

RESISTORS ARE ± 10% UNLESS INDICATED OTHERWISE.

VOLTAGES MEASURED WITH VTVM AND 1K5 ± 10% CONNECTED BETWEEN B AND NEGATIVE.

ZERO SIGNAL COLLECTOR CURRENT TR103/TR104 IS SET BY MEANS OF R108 TO 3·0mA AT 75°F.

COLLECTOR PNP: RED SPOT.
COLLECTOR NPN: BLUE SPOT.

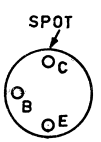

TRANSISTOR CONNECTIONS

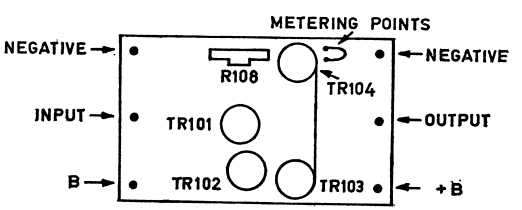

VIEW FROM COMPONENT SIDE OF BOARD

MT9

ELECTRICAL PARTS LIST

CAPACITORS

C. No.	Description	V.W.	Tol ±%	Type or Code No.
1	360E Styroseal	100	2	Ducon DFB
2	10K ceramic	25	+80—20	Ducon CDR
3	10K ceramic	25	+80—20	Ducon CDR
4	3K6 Styroflex	100	5	C.285.AA/B3K6
5	47K ceramic	25	+80—20	Ducon CDR
6	47K ceramic	25	+80—20	Ducon CDR
7	47K ceramic	25	+80—20	Ducon CDR
8	Part of 2nd I.F.T.			
9	47K ceramic	25	+80—20	Ducon CDR
10	47K ceramic	25	+80—20	Ducon CDR
11	47K ceramic	25	+80—20	Ducon CDR
12	Part of 3rd I.F.T.			
13	10M electrolytic	2.5	—	C.426.AS/A10
14	3K3 ceramic, pin up		—20+50	C.322.BA/H3K3
15	47K ceramic	25	+80—20	Ducon CDR
16	3K3 ceramic, pin up		—20+50	C.322.BA/H3K3
17	10M electrolytic	16	—	C.426.AR/E10
18	47K flat foil	30	20	C.280.AA/P47K
101	10M electrolytic	16	—	C.426.AR/E10
102	200M electrolytic	10	—	C.426.AR/D200
103	320M electrolytic	6.4	—	C.426.AR/C320
104	1K5 Polyester	400	10	C.296.AC/A1K5

CAPACITORS

C. No.	Description	V.W.	Tol ±%	Type or Code No.
105	320M electrolytic	6.4	—	C.426.AR/C320
106	200M electrolytic	10	—	C.426.AR/D200
201	30E air trimmer	—	—	C.005.CA/30E
202	30E air trimmer	—	—	C.005.CA/30E
203, 204	Tuning capacitor	—	—	CZ.107.103
205	8E2 ceramic, N2200		1pF	Ducon CDS

RESISTORS

R. No.	Description	W.	Tol ±%	Type or Code No.
1	1K8 carbon	½	10	IRC BTS
2	22E carbon	½	10	IRC BTS
3	3K3 carbon	½	10	IRC BTS
4	27K carbon	½	10	IRC BTS
5	1K5 carbon	½	10	IRC BTS
6	1K carbon	½	10	IRC BTS
7	47K carbon	½	10	IRC BTS
8	1K2 carbon	½	10	IRC BTS
9	39K carbon	½	10	IRC BTS
10	680E carbon	½	10	IRC BTS
11	18K carbon	½	10	IRC BTS
12	82K carbon	½	10	IRC BTS
13	560E carbon	½	10	IRC BTS
14	12K carbon	½	10	IRC BTS
15	1K5 carbon	½	10	IRC BTS
16	10K carbon	½	10	IRC BTS
17	1K carbon	½	10	IRC BTS
18	8K2 carbon	½	10	IRC BTS
101	18K carbon	½	10	IRC BTS

RESISTORS—continued

R. No.	Description	W.	Tol ±%	Type or Code No.
102	22K carbon	½	10	IRC BTS
103	220E carbon	½	10	IRC BTS
104	3E3 metal oxide	¼	10	E.017.BC/A3E3
105	1K carbon	½	10	IRC BTS
106	470E carbon	½	10	IRC BTS
107	130E N.T.C. disc.	1	10	E.201.BC/A130E
108	200E carbon potentiometer pre-set (bias adj.)			E.086.AC/200E
109	2E2 metal oxide	¼	10	E.017.BC/A2E2
110	2E2 metal oxide	¼	10	E.017.BC/A2E2
111	560E carbon	½	10	IRC BTS
201	220K carbon potentiometer, linear taper (volume) with SPST rotary switch (on/off)			E.088ZZ/14465
	(Alternate: 250K with DPST switch)			CZ.034.131

INDUCTORS

L. No.	Description	Code No.
1, 2, 3	Oscillator coil	CZ.652.003
4, 5	1st I.F. transformer	CZ.651.004
6, 7, 8	2nd I.F. transformer	CZ.651.003
9, 10, 11	3rd I.F. transformer	CZ.651.005
201, 202	Rod aerial assembly	CZ.323.097
	Ferroxcube rod for above	CS.152.428
203	Speaker	CZ.161.016

MT9

MECHANICAL PARTS LIST

Description	Code No.
Badge—Philips	CS.436.556
Cabinet assembly (consists of case back and handle securing bushes)—	
red	CR.570.798
grey	CR.570.862
turquoise	CR.570.863
charcoal	CR.570.864
Dial scale	CS.412.038
Grille assembly (consists of grille, dial scale and badge)	CR.520.894
Handle assembly (consists of carrying handle and grip)	CR.523.446

Description	Code No.
Handle securing pin, 2X	CS.279.855
Handle pin retaining clip, 2X	CH.629.235
Knob—tuning	CR.523.597
Knob—volume	CR.523.598
Plug—battery	CZ.365.120 C/F691-5-2
Screw—cabinet to grille	CH.058.160.0Y
Screw—tuning knob retaining	CR.310.600
Screw—gang mounting	B.055.ED/2.6x4
Spacer—tuning spindle	CS.284.068
Speaker mounting bracket, 2X	CS.233.110

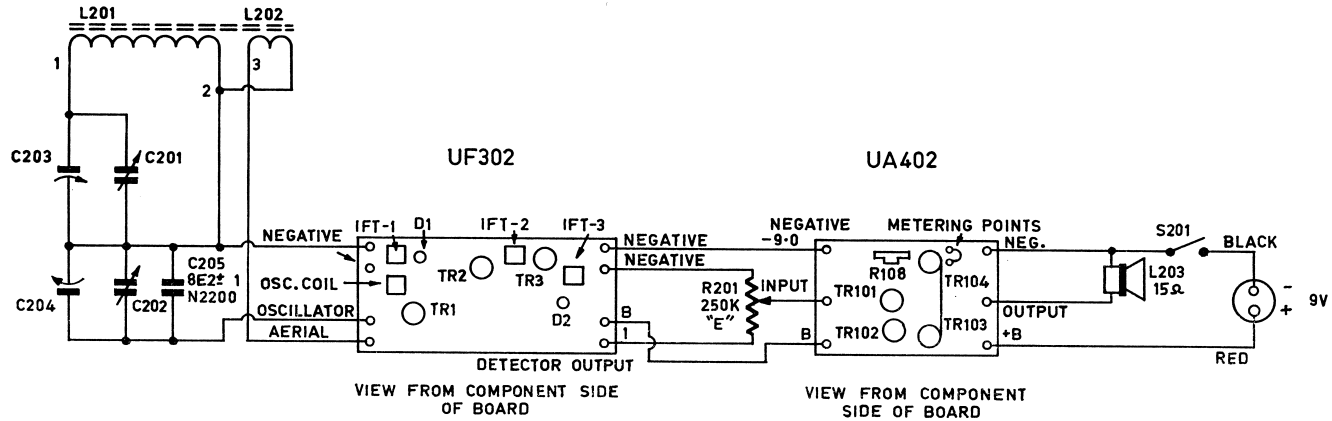

S201 IS MOUNTED ON VOLUME CONTROL R201
L203: MSP TYPE 40A-15, CONE K13

CIRCUIT DIAGRAM UF302: 07/276 (DR. Nº C18834)
CIRCUIT DIAGRAM UA402: 07/271 (DR. Nº B18877)

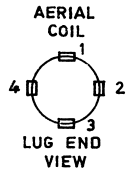

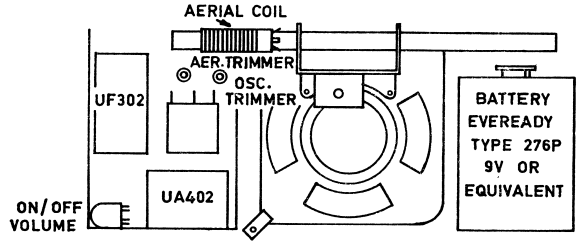

MT9