ALPINE

# SERVICE MANUAL

## 4 CHANNEL POWER AMPLIFIER

"Schematic Diagram cannot use a reference function"

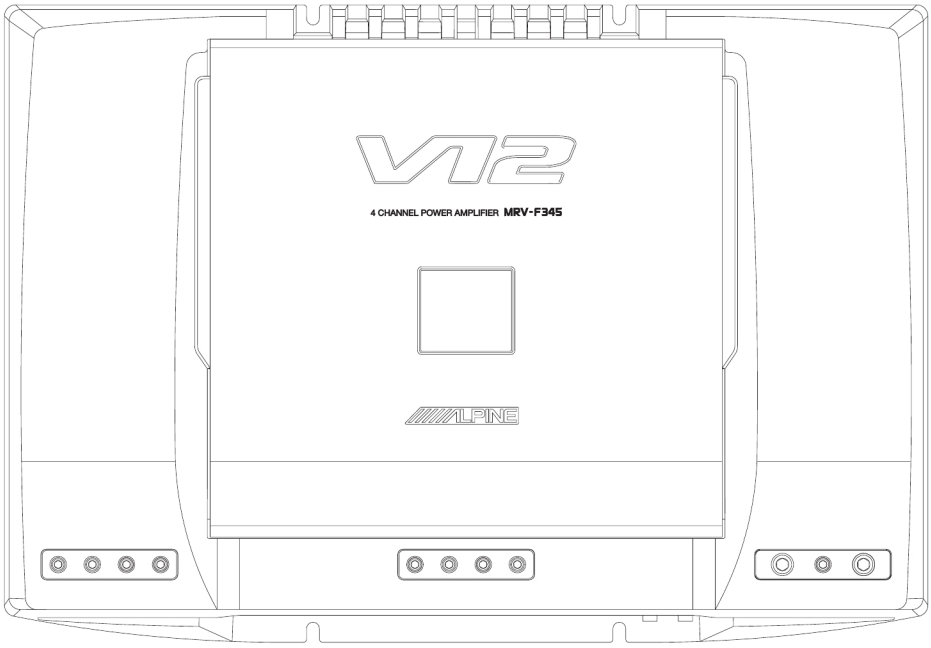


TO ALPINE Home Page

1 / 05-A
68E37844S01

# MRV-F345

## <Cautions for Safe Repair Work>

The following cautions will prevent accidents in the workplace and will ensure safe products.
*The symbols indicate caution is needed to prevent injuries and damage to property.
The symbols and their meanings follow.

| | |
|---|---|
| ⚠ **Warning** | If you ignore this symbol and handle the product incorrectly or unsafely, serious injury or death may result. |
| ⚠ **Caution** | If you ignore this symbol and handle the product incorrectly or unsafely, injury or only material damage may result. |

*The following symbols indicate two levels of cautions.

| | |
|---|---|
| ⚠ | When you see this symbol, you have to be very careful. |
| ❗ | When you see this symbol, you have to follow the instructions there. |

## ⚠ Warning

| | |
|---|---|
| ⚠ **Do not look squarely into the laser light coming from the pickup.**<br>You may loose you sight. | ❗ **Fuse Caution**<br>Always use a designated fuse.<br>Use of an incorrect fuse may result in a fire. |

## ⚠ Caution

| | |
|---|---|
| ⚠ **Do not allow wiring to be caught in the screw/chassis.**<br>If wiring is caught in the screw/chassis, it may cause a short circuit, resulting in a fire. | ❗ **Battery Caution**<br>Use the designated battery.<br>Confirm the correct polarity and seat of the battery.<br>An incorrect battery or an improperly connected or seated battery may result in a fire. |
| ⚠ **High Temperature Caution**<br>Touching the heat sink may cause severe burns. | ❗ **Designated Parts Caution**<br>Look up the part list and ensure that only designated parts are used to prevent problems or accidents. |
| ⚠ **Reverse Power Supply Connections or Misconnections Caution**<br>Reverse power supply connections or misconnections may cause ignition problems and smoke may result. | ❗ **Wiring Caution**<br>Ensure that the wiring is correct when rewiring to prevent problems with ignition/breakdown. |
| ⚠ **Soldering Caution**<br>Hot solder from solder splash may cause severe burns. | ❗ **Wear Gloves**<br>Wear gloves to prevent electrical shocks or injury from the end face of the metal. |

# Contents


| | |
|---|---|
| Packing Assembly Parts List | 4 |
| Packing Method View | 4 |
| Specifications | 5 |
| Extension Cable | 6 |
| Block Diagram | 7 |
| Parts Layout on P.W.Boards and Wiring Diagram | 8 to 10 |
| Schematic Diagram | 11 to 17 |
| Terminal Voltage of IC/TR | 18 to 21 |
| Description of IC Terminal | 22 |
| Exploded View (Cabinet) | 23 |


NOTE : Due to continuing product improvement, specifications and designs are subject to change without notice.

# Packing Assembly Parts List

| Symbol No. | Part No. | Description |
|---|---|---|
| 101-1 | 03E38301S01 | SCR,M4X20 BLK |
| 101-2 | 03E38302S01 | WRENCH,M2.5 |
| 101-3 | 03E38303S01 | WRENCH,M4 |
| #1 102 | 68-02278Z39 | OWNER'S MANUAL |
| $1 102 | 68-02278Z40 | OWNER'S MANUAL |
| $1 102 | 68-02278Z41 | OWNER'S MANUAL |

| Symbol No. | Part No. | Description |
|---|---|---|
| | | |

NOTE:#1:For North American Model Only,$1:For General Foreign Model Only,Others:Common.

# Packing Method View

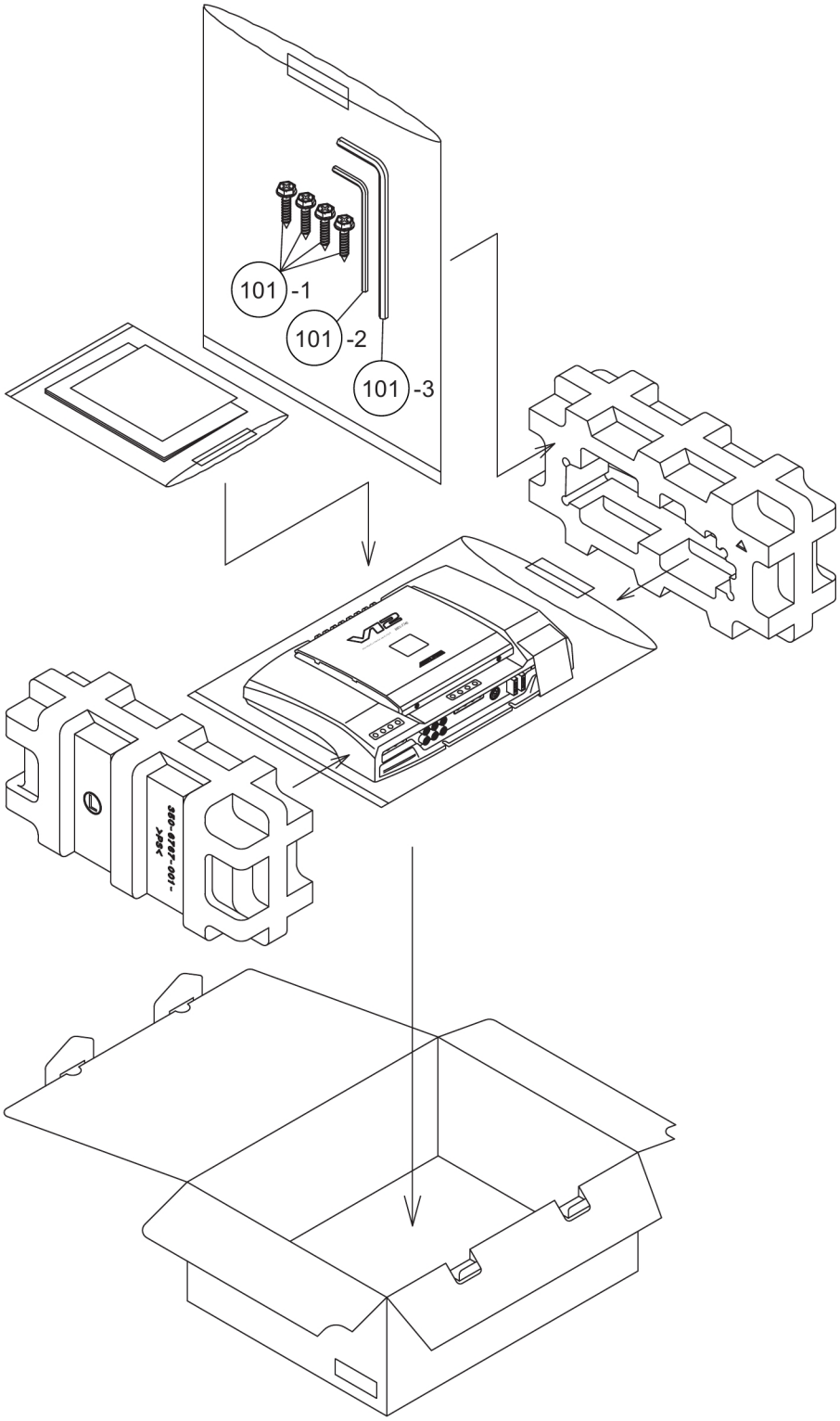


TO CONTENTS

# Specifications

| | |
|---|---|
| Power Output | 4ohm x 4ch, 0.3% T.H.D.+N, 20Hz to 20kHz : 75W |
| | ch 3/4 : 2ohm & 2ohm, 0.8% T.H.D.+N, 20Hz to 20kHz : 150W |
| | ch 3/4 : 4ohm-BTL, 0.8% T.H.D.+N, 20Hz to 20kHz : 300W |
| T.H.D. | 4ohm x 4ch, 75W Power, 20Hz to 20kHz : 0.08% |
| | ch 3/4 : 2ohm & 2ohm, 150W Power, 20Hz to 20kHz : 0.8% |
| | ch 3/4 : 4ohm-BTL, 300W Power, 20Hz to 20kHz : 0.8% |
| Input Sensitivity (RCA Voltage) | Input Gain 0.2V position, 17.4V sine wave output : 0.25±0.5V |
| | Input Gain 4.0V position, 15.0V sine wave output : 4.0±0.5V |
| Pre Out Level (Input 0.5Vrms) | 0.5±0.1V |
| Frequency Response (1kHz 0dB, 1W) | 20Hz : -1 to 0dB |
| | 50kHz : -1 to 0dB |
| Channel Separation (Input shorted, 1kHz, 1W) | 55dB |
| S/N Ratio (Input shorted, Signal : 75W) | 90dB |
| Remote Voltage (ON/OFF) | 5 to 7.5V |
| Current Drain | Remote (Remote Voltage 14.4V) : 1.3±0.3mA |
| | No Signal : 0.7 to 2.5A |
| | 75W x 4 Output (4ohm x 4ch, 1kHz) : 43±4A |
| | Back up (15 seconds later) : 5mA |
| Fuse Requirement | 30A (Peak) x 2 (For Battery Line) |
| Power Source | DC14.4V (10.5 to 16V) |
| Dimensions (W x H x D) | 330 x 61 x 227.8mm |
| Weight | 3.5kg |

NOTE : Due to Continuing product improvement, specifications and designs are subject to change without notice.

TO CONTENTS

# Extension Cable

*Always connect the Extension Cable when making checks of voltage and repair.

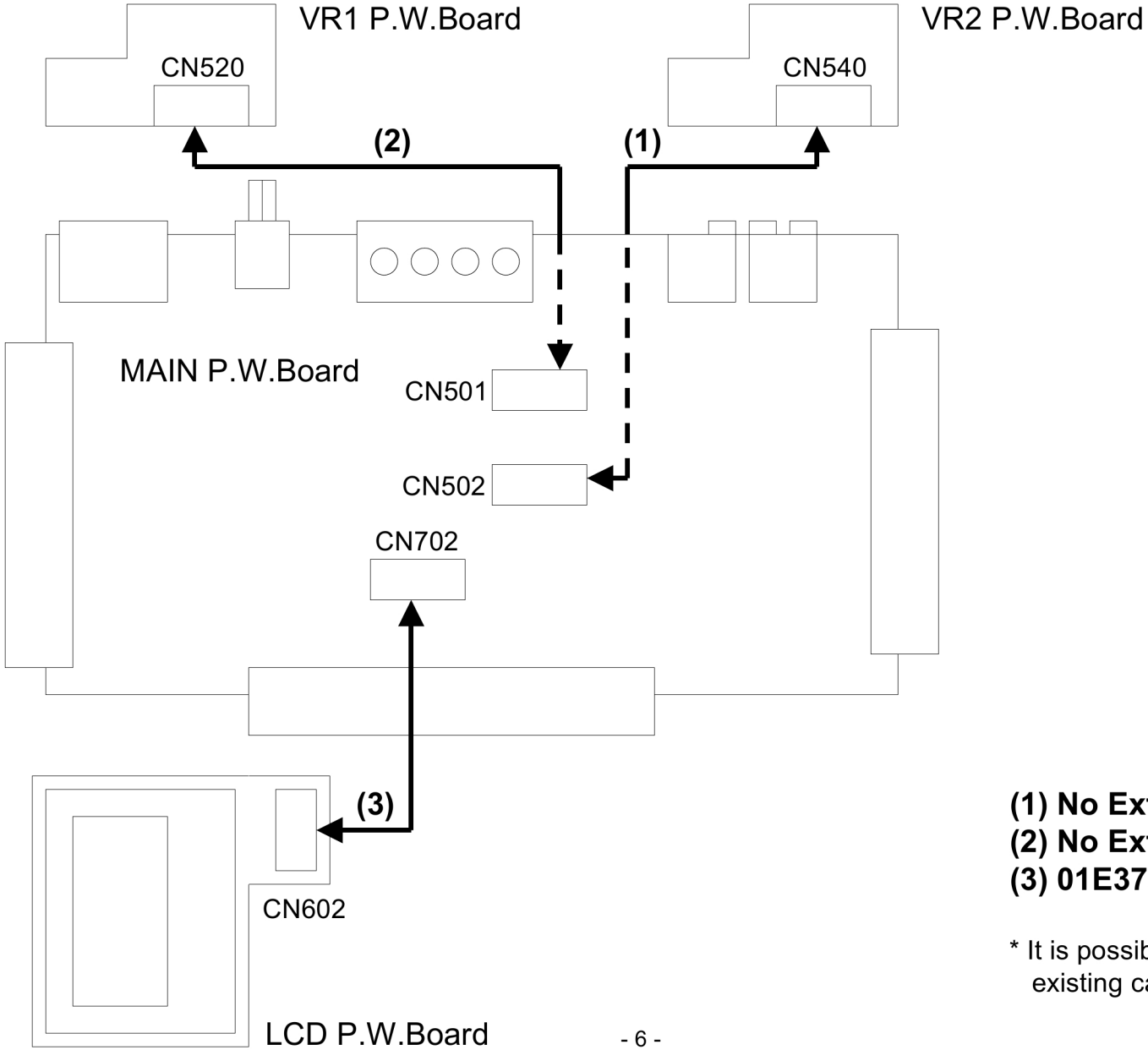


**(1) No Extension ***
**(2) No Extension ***
**(3) 01E37824S01**

* It is possible to use by existing cable in product.



TO CONTENTS

## Block Diagram

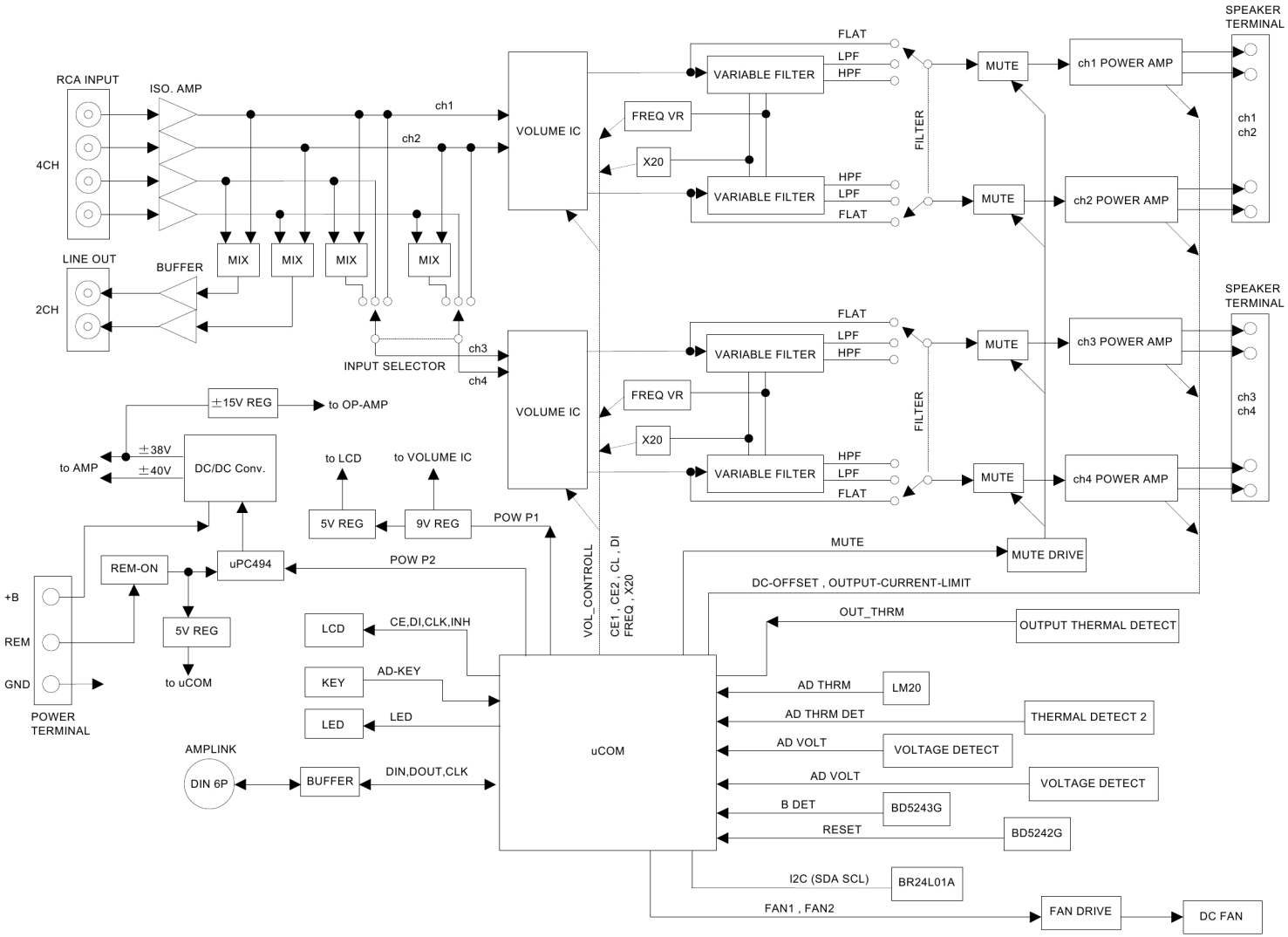


TO CONTENTS

# Parts Layout on P.W.Boards and Wiring Diagram(1/3)

TO CONTENTS

MAIN P.W.Board (Component Side View)

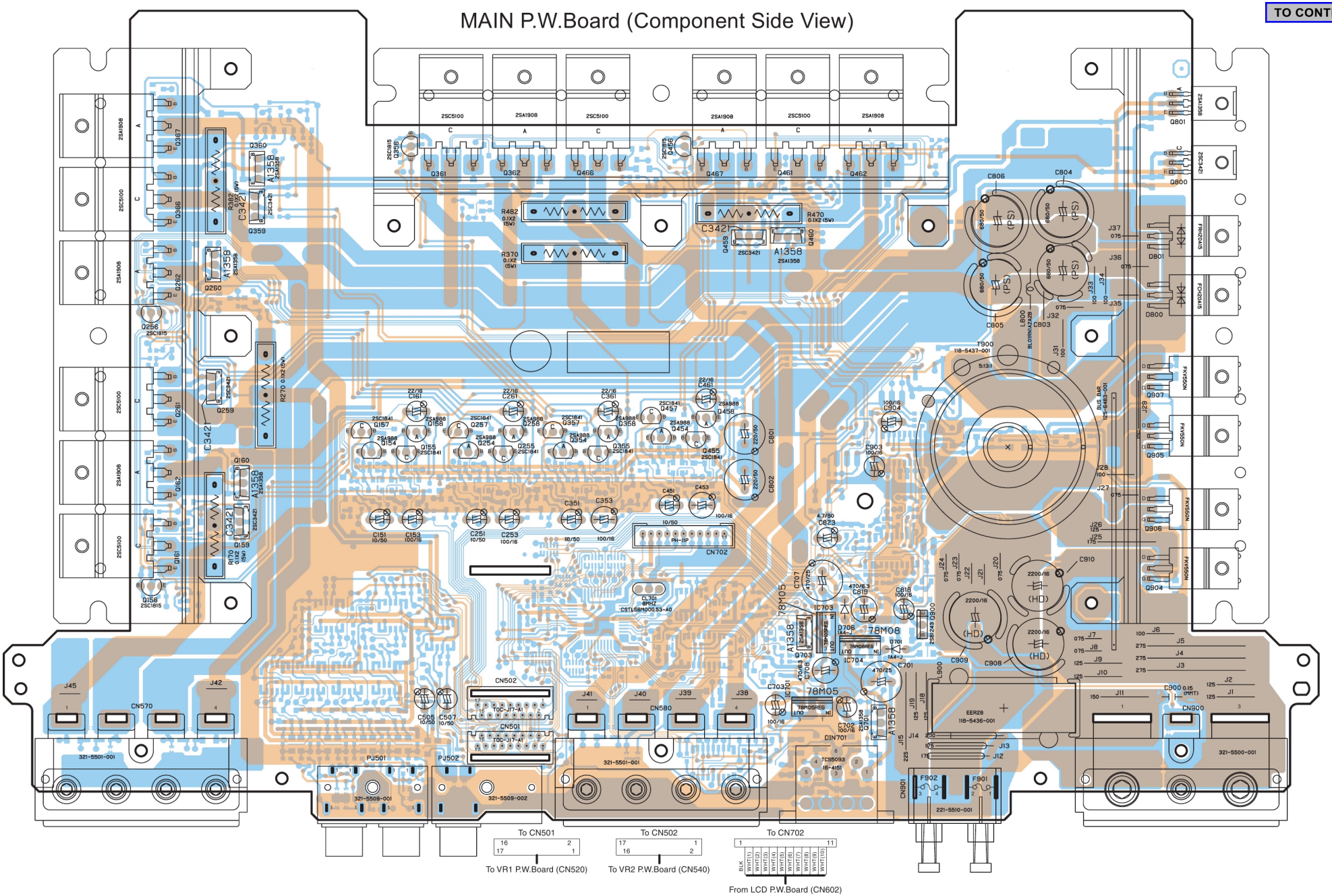


Orange Color Pattern:Component Side Pattern
Blue Color Pattern:Foil Side Pattern

# Parts Layout on P.W.Boards and Wiring Diagram(2/3)

TO CONTENTS

MAIN P.W.Board (Foil Side View)

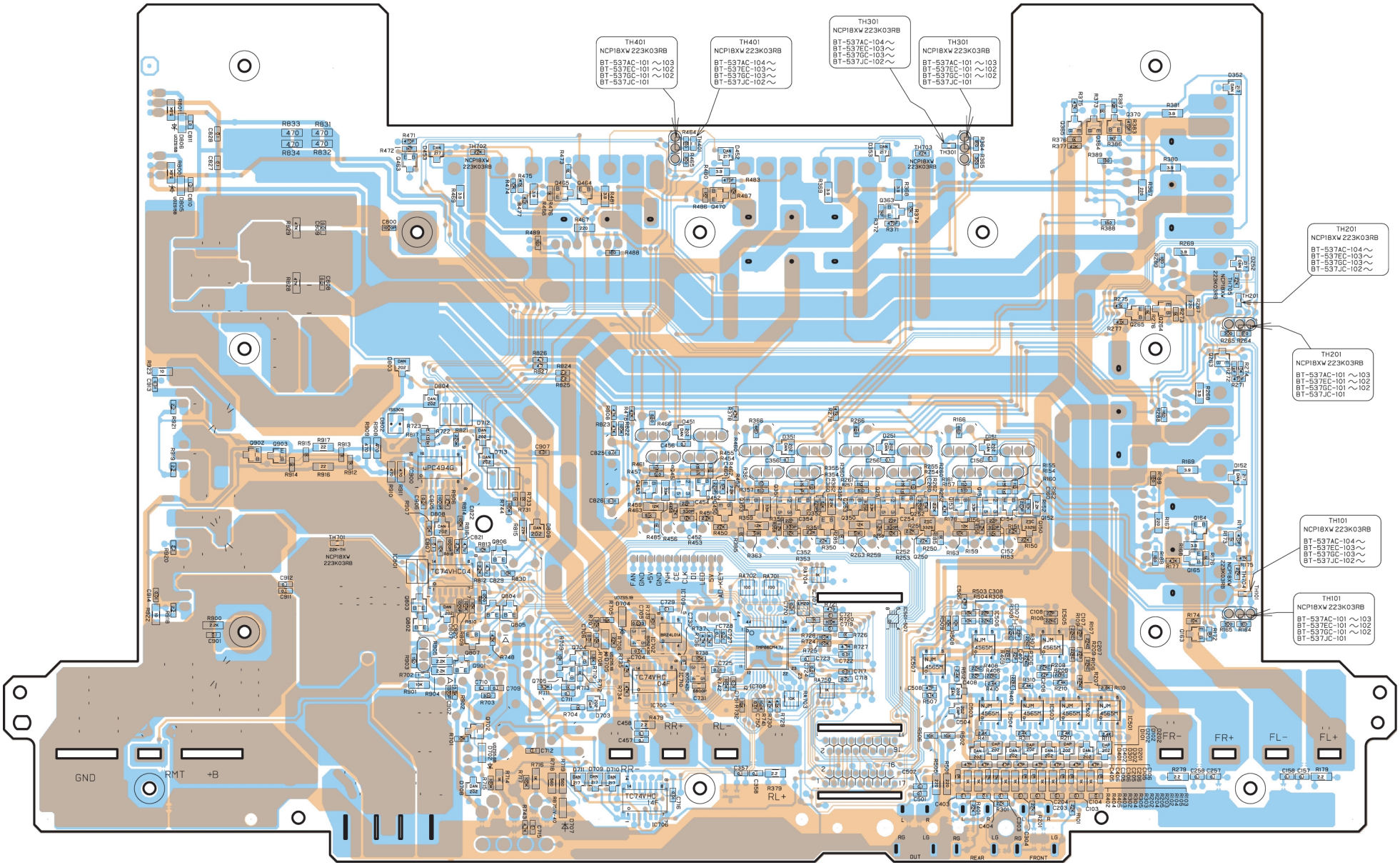


Orange Color Pattern:Component Side Pattern
Blue Color Pattern:Foil Side Pattern

# Parts Layout on P.W.Boards and Wiring Diagram(3/3)

TO CONTENTS

## VR1 P.W.Board (Component Side View)

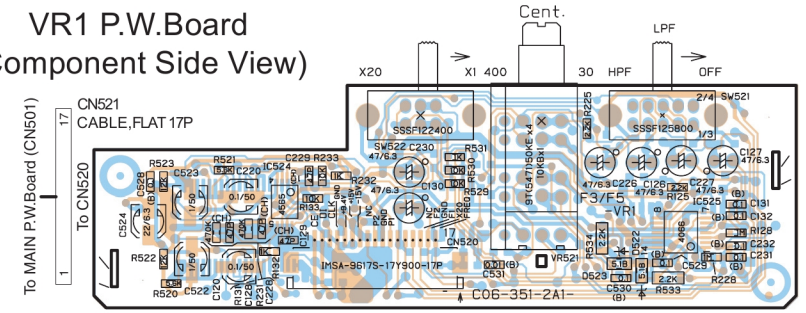


## VR1 P.W.Board (Foil Side View)

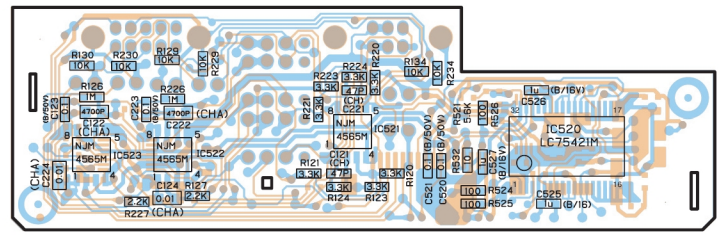

## VR2 P.W.Board (Component Side View)

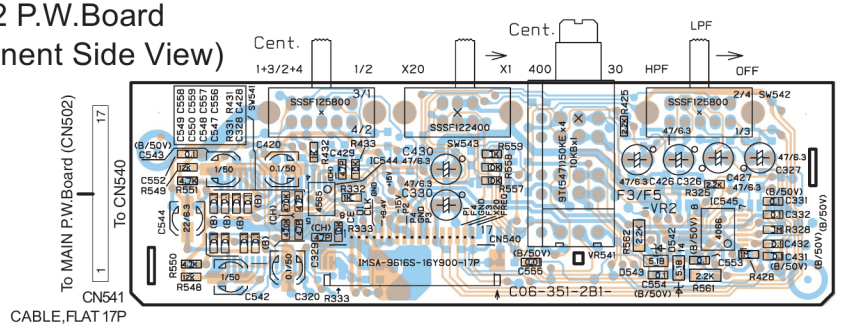


## VR2 P.W.Board (Foil Side View)

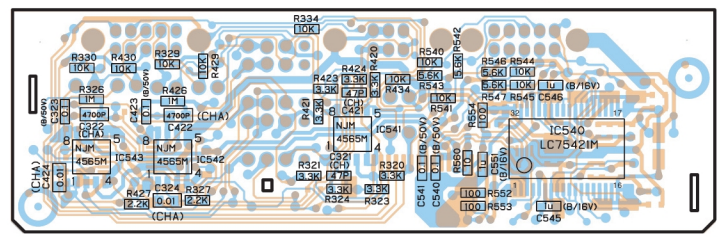

## LCD P.W.Board (Component Side View)

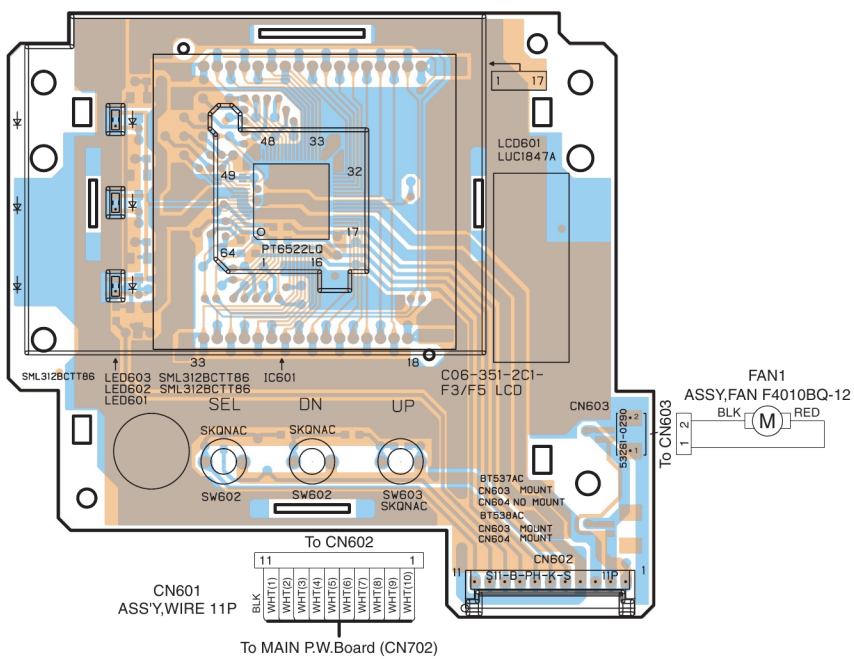


## LCD P.W.Board (Foil Side View)

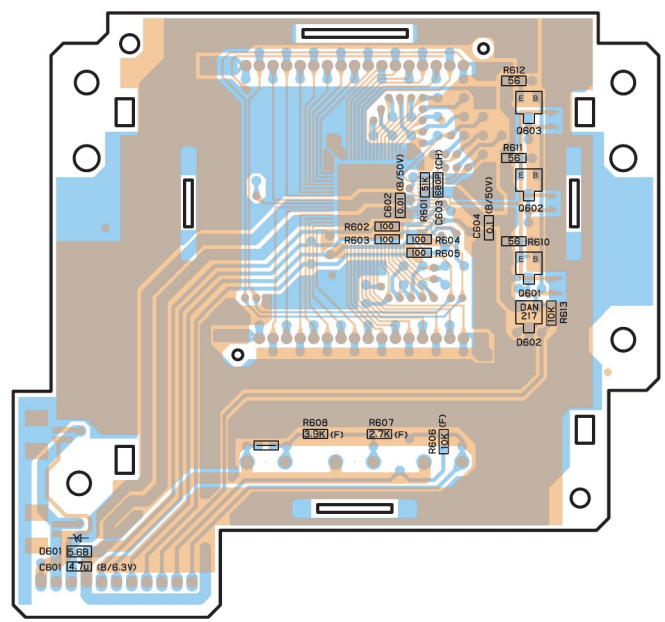

Orange Color Pattern:Component Side Pattern
Blue Color Pattern:Foil Side Pattern

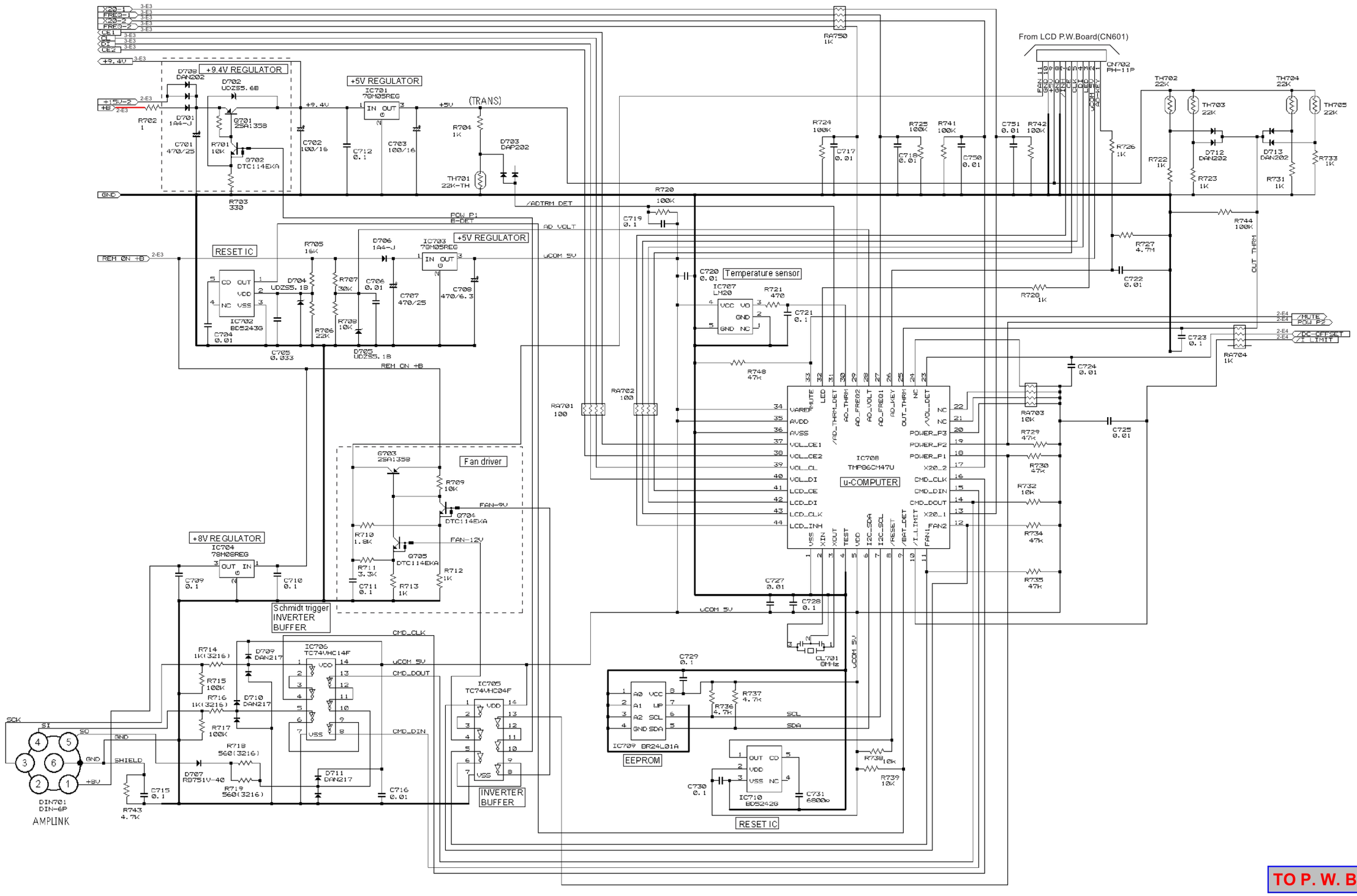


MAIN P.W.Board(1/4)

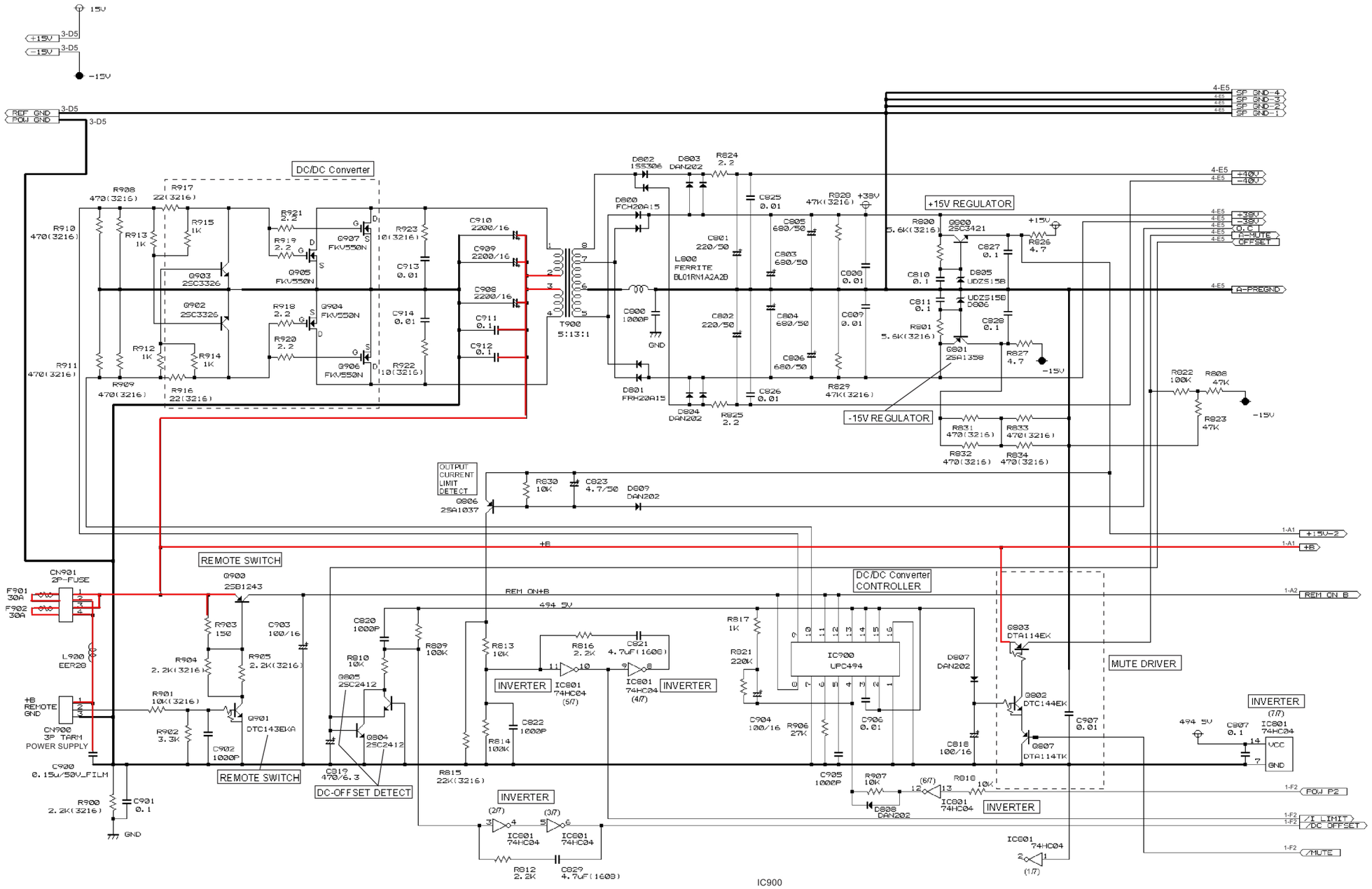


IC900

| | | | |
|---|---|---|---|
| 1 | Non-Inv. Input | 9 | $E_1$ |
| 2 | Inv. Input | 10 | $E_2$ |
| 3 | Feed-Back | 11 | $C_2$ |
| 4 | Dead-Time Control | 12 | $V_{CC}$ |
| 5 | $C_T$ | 13 | Output Control |
| 6 | $R_T$ | 14 | Ref Out |
| 7 | GND | 15 | Inv. Input |
| 8 | $C_1$ | 16 | Non-Inv. Input |

TO P. W. BOARD

TO PARTS LIST

TO CONTENTS

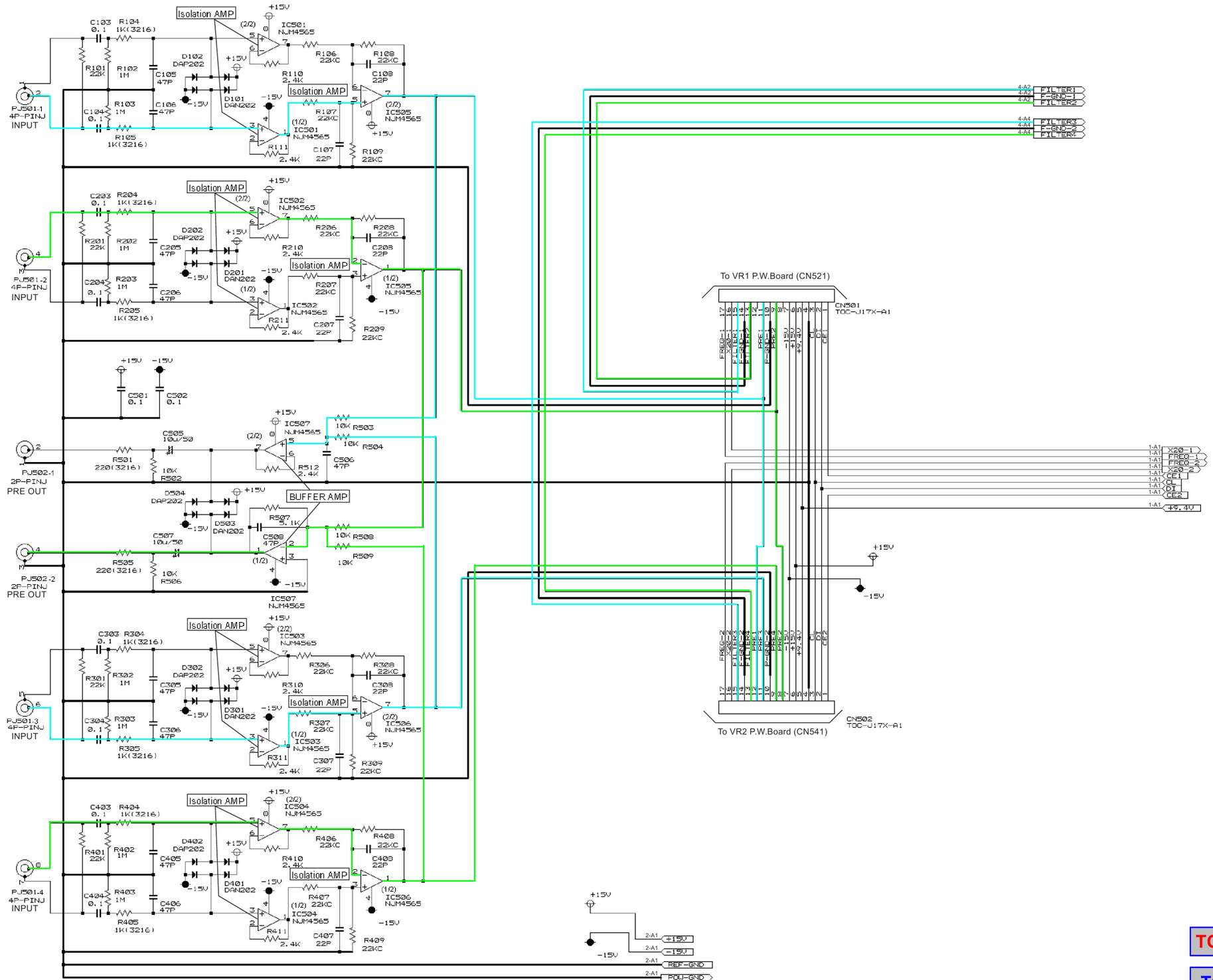


TO P. W. BOARD

TO PARTS LIST

TO CONTENTS

MAIN P.W.Board(3/4)

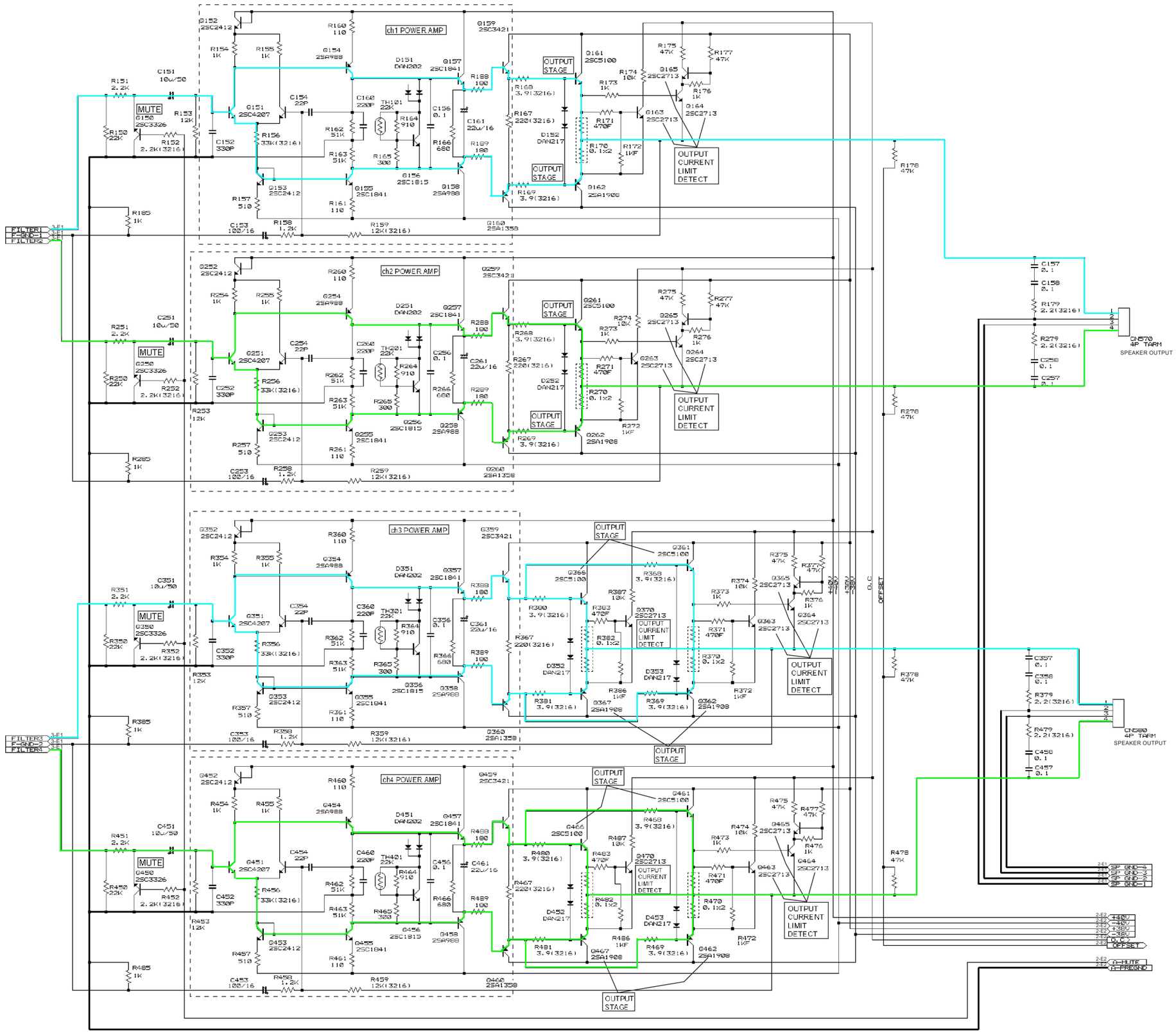


TO P. W. BOARD

TO PARTS LIST

TO CONTENTS

MAIN P.W.Board(4/4)

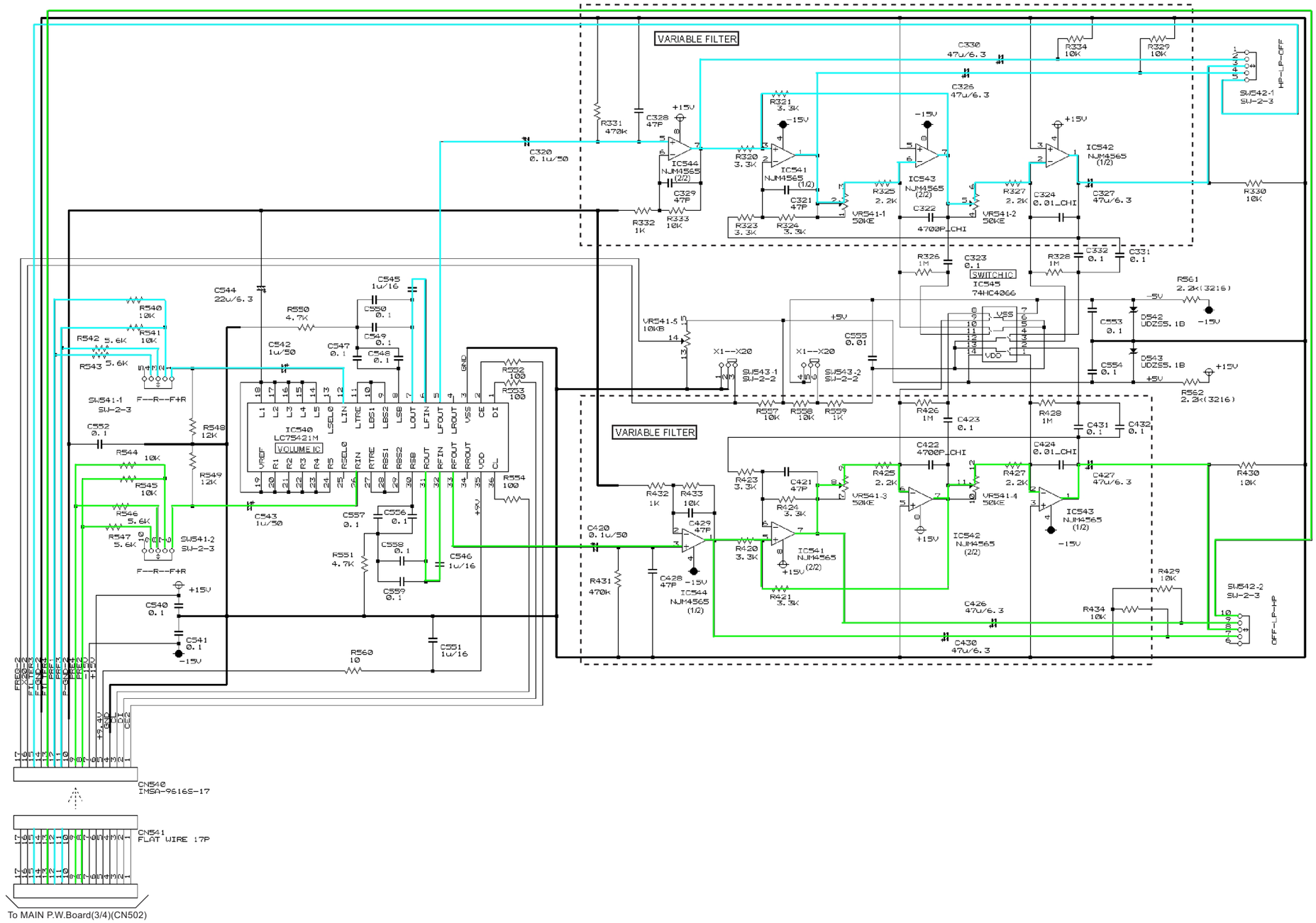


TO P. W. BOARD

TO PARTS LIST

TO CONTENTS

VR2 P.W.Board

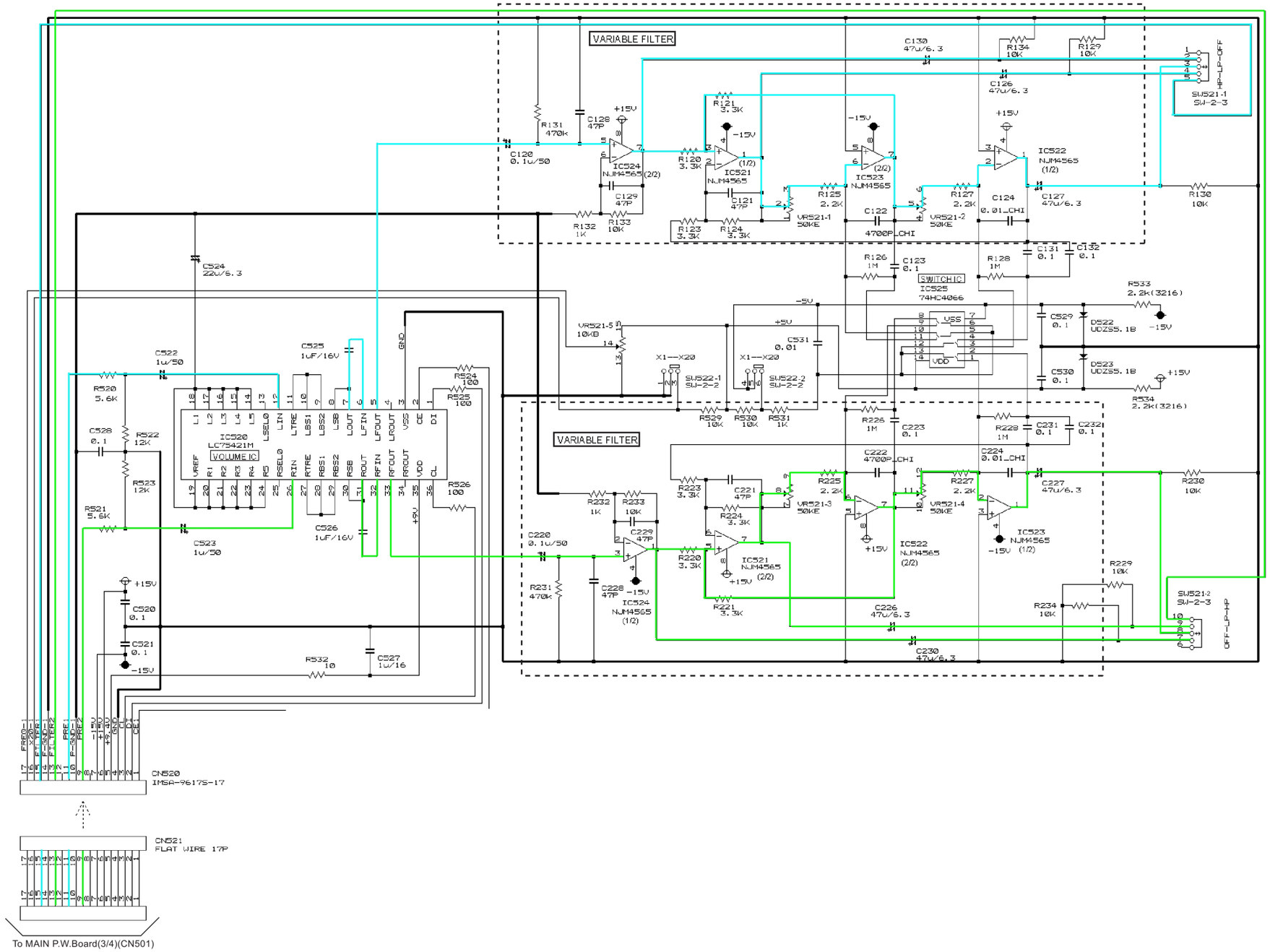


TO P. W. BOARD

TO PARTS LIST

TO CONTENTS

VR1 P.W.Board

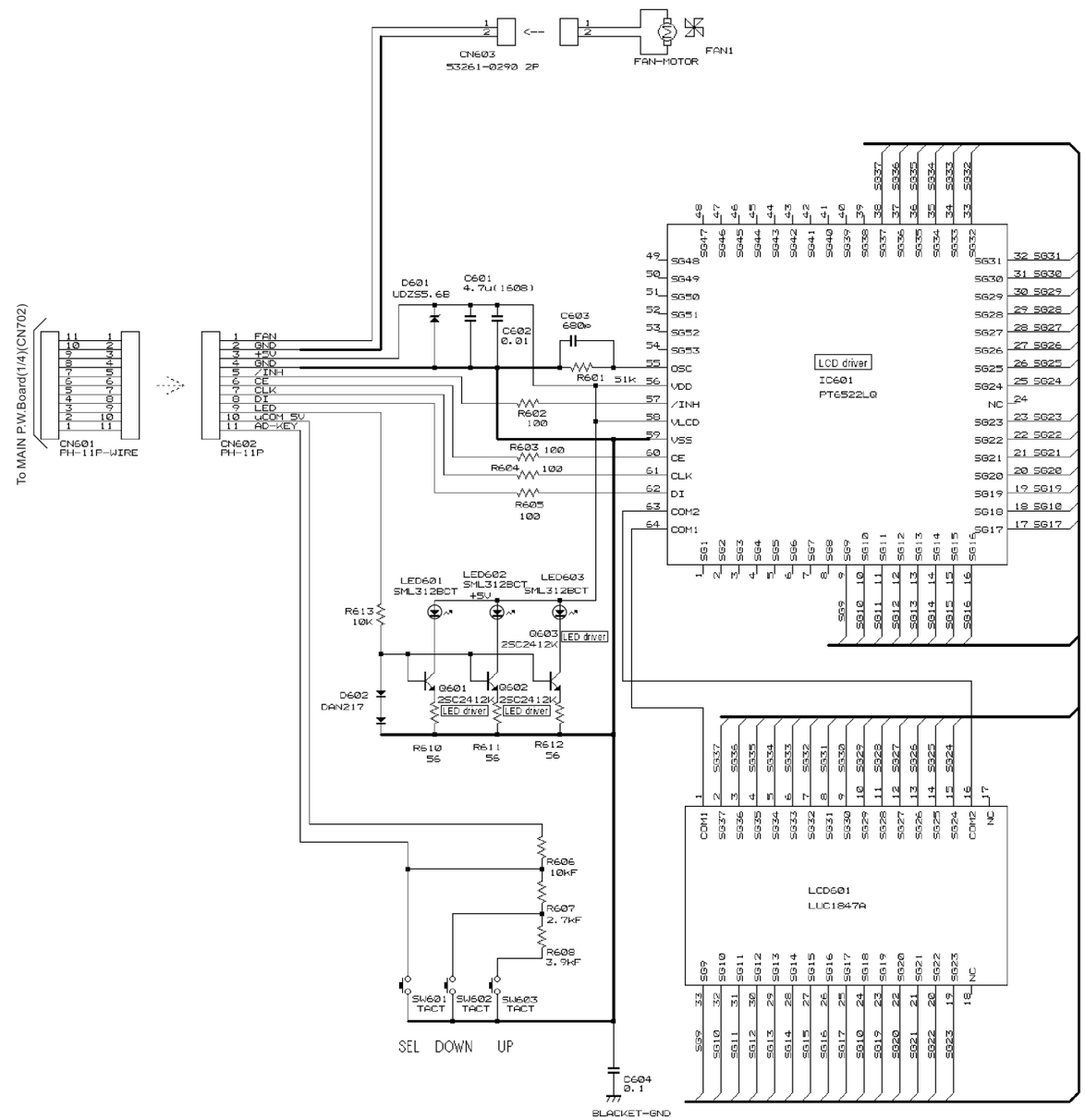


TO P. W. BOARD

TO PARTS LIST

TO CONTENTS

LCD P.W.Board

# Terminal Voltage of IC/TR

| IC501 | | | |
|---|---|---|---|
| 1 | 0 | 5 | 0 |
| 2 | 0 | 6 | 0 |
| 3 | 0 | 7 | 0 |
| 4 | -13.9 | 8 | 13.9 |

| IC502 | | | |
|---|---|---|---|
| 1 | 0 | 5 | 0 |
| 2 | 0 | 6 | 0 |
| 3 | 0 | 7 | 0 |
| 4 | -13.9 | 8 | 13.9 |

| IC503 | | | |
|---|---|---|---|
| 1 | 0 | 5 | 0 |
| 2 | 0 | 6 | 0 |
| 3 | 0 | 7 | 0 |
| 4 | -13.9 | 8 | 13.9 |

| IC504 | | | |
|---|---|---|---|
| 1 | 0 | 5 | 0 |
| 2 | 0 | 6 | 0 |
| 3 | 0 | 7 | 0 |
| 4 | -13.9 | 8 | 13.9 |

| IC505 | | | |
|---|---|---|---|
| 1 | 0 | 5 | 0 |
| 2 | 0 | 6 | 0 |
| 3 | 0 | 7 | 0 |
| 4 | -13.9 | 8 | 13.9 |

| IC506 | | | |
|---|---|---|---|
| 1 | 0 | 5 | 0 |
| 2 | 0 | 6 | 0 |
| 3 | 0 | 7 | 0 |
| 4 | -13.9 | 8 | 13.9 |

| IC507 | | | |
|---|---|---|---|
| 1 | 0 | 5 | 0 |
| 2 | 0 | 6 | 0 |
| 3 | 0 | 7 | 0 |
| 4 | -13.9 | 8 | 13.9 |

| IC520 | | | | | | | | | |
|---|---|---|---|---|---|---|---|---|---|
| 1 | 0 | 9 | 4.7 | 17 | 4.7 | 25 | 4.7 | 33 | 4.7 |
| 2 | 0 | 10 | 4.7 | 18 | 4.7 | 26 | 4.7 | 34 | 4.7 |
| 3 | 0 | 11 | 4.7 | 19 | 4.7 | 27 | 4.7 | 35 | 9.3 |
| 4 | 4.7 | 12 | 4.7 | 20 | 4.7 | 28 | 4.7 | 36 | 0 |
| 5 | 4.7 | 13 | 4.7 | 21 | 4.7 | 29 | 4.7 | | |
| 6 | 4.7 | 14 | 4.7 | 22 | 4.7 | 30 | 4.7 | | |
| 7 | 4.7 | 15 | 4.7 | 23 | 4.7 | 31 | 4.7 | | |
| 8 | 4.7 | 16 | 4.7 | 24 | 4.7 | 32 | 4.7 | | |

| IC521 | | | |
|---|---|---|---|
| 1 | 0 | 5 | 0 |
| 2 | 0 | 6 | 0 |
| 3 | 0 | 7 | 0 |
| 4 | -13.9 | 8 | 13.9 |

| IC522 | | | |
|---|---|---|---|
| 1 | 0 | 5 | 0 |
| 2 | 0 | 6 | 0 |
| 3 | 0 | 7 | 0 |
| 4 | -13.9 | 8 | 13.9 |

| IC523 | | | |
|---|---|---|---|
| 1 | 0 | 5 | 0 |
| 2 | 0 | 6 | 0 |
| 3 | 0 | 7 | 0 |
| 4 | -13.9 | 8 | 13.9 |

| IC524 | | | |
|---|---|---|---|
| 1 | 0 | 5 | 0 |
| 2 | 0 | 6 | 0 |
| 3 | 0 | 7 | 0 |
| 4 | -13.9 | 8 | 13.9 |

Unit : V (Voltage)

TO SCHEMATIC TO CONTENTS

| IC525 | | | | | | | | | |
|---|---|---|---|---|---|---|---|---|---|
| 1 | 0 | 4 | 0 | 7 | -5.1 | 10 | 0 | 13 | 5 (-5) * |
| 2 | 0 | 5 | 5 (-5) * | 8 | 0 | 11 | 0 | 14 | 5.1 |
| 3 | 0 | 6 | 5 (-5) * | 9 | 0 | 12 | 5 (-5) * | | |

* depend on x20 switch

| IC540 | | | | | | | | | |
|---|---|---|---|---|---|---|---|---|---|
| 1 | 0 | 9 | 4.7 | 17 | 4.7 | 25 | 4.7 | 33 | 4.7 |
| 2 | 0 | 10 | 4.7 | 18 | 4.7 | 26 | 4.7 | 34 | 4.7 |
| 3 | 0 | 11 | 4.7 | 19 | 4.7 | 27 | 4.7 | 35 | 9.3 |
| 4 | 4.7 | 12 | 4.7 | 20 | 4.7 | 28 | 4.7 | 36 | 0 |
| 5 | 4.7 | 13 | 4.7 | 21 | 4.7 | 29 | 4.7 | | |
| 6 | 4.7 | 14 | 4.7 | 22 | 4.7 | 30 | 4.7 | | |
| 7 | 4.7 | 15 | 4.7 | 23 | 4.7 | 31 | 4.7 | | |
| 8 | 4.7 | 16 | 4.7 | 24 | 4.7 | 32 | 4.7 | | |

| IC541 | | | |
|---|---|---|---|
| 1 | 0 | 5 | 0 |
| 2 | 0 | 6 | 0 |
| 3 | 0 | 7 | 0 |
| 4 | -13.9 | 8 | 13.9 |

| IC542 | | | |
|---|---|---|---|
| 1 | 0 | 5 | 0 |
| 2 | 0 | 6 | 0 |
| 3 | 0 | 7 | 0 |
| 4 | -13.9 | 8 | 13.9 |

| IC543 | | | |
|---|---|---|---|
| 1 | 0 | 5 | 0 |
| 2 | 0 | 6 | 0 |
| 3 | 0 | 7 | 0 |
| 4 | -13.9 | 8 | 13.9 |

| IC544 | | | |
|---|---|---|---|
| 1 | 0 | 5 | 0 |
| 2 | 0 | 6 | 0 |
| 3 | 0 | 7 | 0 |
| 4 | -13.9 | 8 | 13.9 |

| IC545 | | | | | | | | | |
|---|---|---|---|---|---|---|---|---|---|
| 1 | 0 | 4 | 0 | 7 | -5.1 | 10 | 0 | 13 | 5 (-5) * |
| 2 | 0 | 5 | 5 (-5) * | 8 | 0 | 11 | 0 | 14 | 5.1 |
| 3 | 0 | 6 | 5 (-5) * | 9 | 0 | 12 | 5 (-5) * | | |

* depend on x20 switch

| IC601 | | | | | | | | | |
|---|---|---|---|---|---|---|---|---|---|
| 1 | 2.5 | 14 | 2.5 | 27 | 2.5 | 40 | 2.5 | 53 | 2.5 |
| 2 | 2.5 | 15 | 2.5 | 28 | 2.5 | 41 | 2.5 | 54 | 2.5 |
| 3 | 2.5 | 16 | 2.5 | 29 | 2.5 | 42 | 2.5 | 55 | 3.8 |
| 4 | 2.5 | 17 | 2.5 | 30 | 2.5 | 43 | 2.5 | 56 | 5 |
| 5 | 2.5 | 18 | 2.5 | 31 | 2.5 | 44 | 2.5 | 57 | 5 |
| 6 | 2.5 | 19 | 2.5 | 32 | 2.5 | 45 | 2.5 | 58 | 5 |
| 7 | 2.5 | 20 | 2.5 | 33 | 2.5 | 46 | 2.5 | 59 | 0 |
| 8 | 2.5 | 21 | 2.5 | 34 | 2.5 | 47 | 2.5 | 60 | 0.4 |
| 9 | 2.5 | 22 | 2.5 | 35 | 2.5 | 48 | 2.5 | 61 | 0.1 |
| 10 | 2.5 | 23 | 2.5 | 36 | 2.5 | 49 | 2.5 | 62 | 0.1 |
| 11 | 2.5 | 24 | 0 | 37 | 2.5 | 50 | 2.5 | 63 | 2.5 |
| 12 | 2.5 | 25 | 2.5 | 38 | 2.5 | 51 | 2.5 | 64 | 2.5 |
| 13 | 2.5 | 26 | 2.5 | 39 | 2.5 | 52 | 2.5 | | |

Unit : V (Voltage)

TO SCHEMATIC TO CONTENTS

| IC701 | |
|---|---|
| 1 | 9.6 |
| 2 | 0 |
| 3 | 5 |

| IC702 | |
|---|---|
| 1 | 5 |
| 2 | 4.8 |
| 3 | 0 |
| 4 | 0 |
| 5 | 2.7 |

| IC703 | |
|---|---|
| 1 | 13.7 |
| 2 | 0 |
| 3 | 5 |

| IC707 | |
|---|---|
| 1 | 0 |
| 2 | 0 |
| 3 | 1.5 * |
| 4 | 5 |
| 5 | 0 |

* change with temperature

| IC704 | |
|---|---|
| 1 | 14.3 |
| 2 | 0 |
| 3 | 8 |

| IC705 | | | |
|---|---|---|---|
| 1 | 0 | 8 | 0 |
| 2 | 5 | 9 | 5 |
| 3 | 5 | 10 | 5 |
| 4 | 0 | 11 | 0 |
| 5 | 0 | 12 | 0 |
| 6 | 5 | 13 | 5 |
| 7 | 0 | 14 | 5 |

| IC706 | | | |
|---|---|---|---|
| 1 | 0 | 8 | 0 |
| 2 | 5 | 9 | 5 |
| 3 | 5 | 10 | 5 |
| 4 | 0 | 11 | 0 |
| 5 | 0 | 12 | 0 |
| 6 | 5 | 13 | 5 |
| 7 | 0 | 14 | 5 |

| IC708 | | | | | | | | | |
|---|---|---|---|---|---|---|---|---|---|
| 1 | 0 | 10 | 5 | 19 | 5 | 28 | 3.5 | 37 | 0 |
| 2 | 2.1 | 11 | 0 | 20 | 5 | 29 | 0 to 5 *3 | 38 | 0 |
| 3 | 2.3 | 12 | 0 | 21 | 0 | 30 | 1.5 *2 | 39 | 0 |
| 4 | 0 | 13 | 4.6 (0) *1 | 22 | 0 | 31 | 5 *2 | 40 | 0 |
| 5 | 5 | 14 | 5 | 23 | 5 | 32 | 5 | 41 | 0.4 |
| 6 | 5 | 15 | 0 | 24 | 0 | 33 | 5 | 42 | 0.1 |
| 7 | 5 | 16 | 0 | 25 | 0.1 *2 | 34 | 5 | 43 | 0.1 |
| 8 | 5 | 17 | 4.6 (0) *1 | 26 | 5 | 35 | 5 | 44 | 5 |
| 9 | 5 | 18 | 5 | 27 | 0 to 5 *3 | 36 | 0 | | |

*1 depend on x20 switch, *2 change with temperature, *3 change with VR angle

| IC709 | | | |
|---|---|---|---|
| 1 | 0 | 5 | 5 |
| 2 | 0 | 6 | 5 |
| 3 | 0 | 7 | 0 |
| 4 | 0 | 8 | 5 |

| IC710 | |
|---|---|
| 1 | 5 |
| 2 | 5 |
| 3 | 0 |
| 4 | 0 |
| 5 | 2.7 |

| IC801 | | | |
|---|---|---|---|
| 1 | 0 | 8 | 0 |
| 2 | 5 | 9 | 5 |
| 3 | 5 | 10 | 5 |
| 4 | 0 | 11 | 0 |
| 5 | 5 | 12 | 0 |
| 6 | 0 | 13 | 4.9 |
| 7 | 0 | 14 | 5 |

| IC900 | | | |
|---|---|---|---|
| 1 | 0 | 9 | 5.8 |
| 2 | 5 | 10 | 5.8 |
| 3 | 0.1 | 11 | 14.4 |
| 4 | 0.2 | 12 | 14.4 |
| 5 | 1.7 | 13 | 5 |
| 6 | 3.9 | 14 | 5 |
| 7 | 0 | 15 | 5 |
| 8 | 14.4 | 16 | 0 |

Unit : V (Voltage)

TO SCHEMATIC TO CONTENTS

| | E | C | B |
|---|---|---|---|
| Q150 | 0 | 0 | -7 |
| Q151 | -0.6 | 38 | 0 |
| Q152 | 38.5 | 39 | 39 |
| Q153 | -38.6 | -38 | -38 |
| Q154 | 38.6 | 1.7 | 38 |
| Q155 | -38.6 | -1.7 | -38 |
| Q156 | -1.7 | 1 | -1 |
| Q157 | 1.1 | 39 | 1.7 |
| Q158 | -1.1 | -39 | -1.7 |
| Q159 | 0.5 | 37 | 1.1 |
| Q160 | -0.5 | -37 | -1.1 |
| Q161 | 0 | 37 | 0.5 |
| Q162 | 0 | -37 | -0.5 |
| Q163 | 0 | 36.4 | 0 |
| Q164 | 0 | 36.8 | 0 |
| Q165 | 36.8 | 36.5 | 36.8 |
| Q250 | 0 | 0 | -7 |
| Q251 | -0.6 | 38 | 0 |
| Q252 | 38.5 | 39 | 39 |
| Q253 | -38.6 | -38 | -38 |
| Q254 | 38.6 | 1.7 | 38 |
| Q255 | -38.6 | -1.7 | -38 |
| Q256 | -1.7 | 1 | -1 |
| Q257 | 1.1 | 39 | 1.7 |
| Q258 | -1.1 | -39 | -1.7 |
| Q259 | 0.5 | 37 | 1.1 |
| Q260 | -0.5 | -37 | -1.1 |
| Q261 | 0 | 37 | 0.5 |
| Q262 | 0 | -37 | -0.5 |
| Q263 | 0 | 36.4 | 0 |
| Q264 | 0 | 36.8 | 0 |
| Q265 | 36.8 | 36.5 | 36.8 |
| Q350 | 0 | 0 | -7 |
| Q351 | -0.6 | 38 | 0 |
| Q352 | 38.5 | 39 | 39 |
| Q353 | -38.6 | -38 | -38 |
| Q354 | 38.6 | 1.7 | 38 |
| Q355 | -38.6 | -1.7 | -38 |
| Q356 | -1.7 | 1 | -1 |
| Q357 | 1.1 | 39 | 1.7 |
| Q358 | -1.1 | -39 | -1.7 |
| Q359 | 0.5 | 37 | 1.1 |
| Q360 | -0.5 | -37 | -1.1 |
| Q361 | 0 | 37 | 0.5 |
| Q362 | 0 | -37 | -0.5 |
| Q363 | 0 | 36.4 | 0 |
| Q364 | 0 | 36.8 | 0 |
| Q365 | 36.8 | 36.5 | 36.8 |
| Q366 | 0 | 37 | 0.5 |
| Q367 | 0 | -37 | -0.5 |
| Q370 | 0 | 36.4 | 0 |
| Q450 | 0 | 0 | -7 |
| Q451 | -0.6 | 38 | 0 |
| Q452 | 38.5 | 39 | 39 |
| Q453 | -38.6 | -38 | -38 |
| Q454 | 38.6 | 1.7 | 38 |

| | E | C | B | |
|---|---|---|---|---|
| Q455 | -38.6 | -1.7 | -38 | |
| Q456 | -1.7 | 1 | -1 | |
| Q457 | 1.1 | 39 | 1.7 | |
| Q458 | -1.1 | -39 | -1.7 | |
| Q459 | 0.5 | 37 | 1.1 | |
| Q460 | -0.5 | -37 | -1.1 | |
| Q461 | 0 | 37 | 0.5 | |
| Q462 | 0 | -37 | -0.5 | |
| Q463 | 0 | 36.4 | 0 | |
| Q464 | 0 | 36.8 | 0 | |
| Q465 | 36.8 | 36.5 | 36.8 | |
| Q466 | 0 | 37 | 0.5 | |
| Q467 | 0 | -37 | -0.5 | |
| Q470 | 0 | 36.4 | 0 | |
| Q601 | 0.4 | 1.9 | 1.1 | |
| Q602 | 0.4 | 1.9 | 1.1 | |
| Q603 | 0.4 | 1.9 | 1.1 | |
| Q701 | 13.5 | 9.6 | 12.9 | |
| Q702 | 3.9 | 12.9 | 5 | |
| Q703 | 14.4 | 0 | 14.4 | ← DCFAN OFF |
| Q704 | 0 | 14.4 | 0 | ← DCFAN OFF |
| Q705 | 0 | 14.4 | 0 | ← DCFAN OFF |
| Q800 | 14.3 | 37 | 15 | |
| Q801 | -14.3 | -37 | -15 | |
| Q802 | 4.9 | 14.4 | 4.9 | |
| Q803 | 14.4 | -7 | 14.4 | |
| Q804 | 0 | 4.9 | 0 | |
| Q805 | 0 | 4.9 | 0 | |
| Q806 | 14.2 | 0 | 14.2 | |
| Q807 | 4.9 | 0 | 5 | |
| Q900 | 14.4 | 14.4 | 13.7 | |
| Q901 | 0 | 0.1 | 2.4 | |
| Q902 | 0 | 5.6 | 0.5 | |
| Q903 | 0 | 5.6 | 0.5 | |

| | G | D | S |
|---|---|---|---|
| Q904 | 5.6 | 14.3 | 0 |
| Q905 | 5.6 | 14.3 | 0 |
| Q906 | 5.6 | 14.3 | 0 |
| Q907 | 5.6 | 14.3 | 0 |

[Measuring Conditions]

1. Power Supply Voltage : DC14.4V
2. Measuring Meter : Digital Multimeter
3. Measuring Point Reference : Between GND
4. Measuring Condition : Remote ON
   : No signal input

Unit : V (Voltage)

TO SCHEMATIC TO CONTENTS

# Description of IC Terminal

**TMP86CM47AUG : IC708**

| No. | Symbol | I/O | Terminal Description |
|---|---|---|---|
| 1 | VSS | I | GND connect terminal. |
| 2 | XIN | I | Crystal OSC connect terminal. |
| 3 | XOUT | O | |
| 4 | TEST | I | TEST terminal. |
| 5 | VDD | - | Power supply terminal. (4.5 to 5.5V) |
| 6 | I2C_SDA | O | I2C_SDA output terminal. |
| 7 | I2C_SCL | O | I2C_SCL output terminal. |
| 8 | /RESET | I | RESET terminal. |
| 9 | /BAT_DET | I | BAT-DET terminal. |
| 10 | /I_LIMIT | I | I_LIMIT input terminal. |
| 11 | FAN1 | O | FAN power supply control terminal. (9V) |
| 12 | FAN2 | O | FAN power supply control terminal. (12V) |
| 13 | X20_1 | I | x20 switch input terminal. (ch 1/2) |
| 14 | CMD_DOUT | O | AMP LINK data output terminal. |
| 15 | CMD_DIN | I | AMP LINK data input terminal. |
| 16 | CMD_CLK | I | AMP LINK clock terminal. |
| 17 | X20_2 | I | x20 switch input terminal. (ch 3/4) |
| 18 | POWER_P1 | O | Power supply circuit control signal output terminal -1. |
| 19 | POWER_P2 | O | Power supply circuit control signal output terminal -2. |
| 20 | POWER_P3(PULL-UP) | - | Pull-up connect terminal. |
| 21 | NC(PULL-UP) | | |
| 22 | | | |
| 23 | /VOL_DET | I | VOL-DET terminal. (Secondary voltage, DC-OFFSET) |
| 24 | NC(PULL-UP) | - | Pull-up connect terminal. |
| 25 | OUT_THRM | I | Output Thermal detect terminal. |
| 26 | AD_KEY | I | KEY level input terminal. |
| 27 | AD_FREQ1 | I | Frequency display input terminal. (ch 1/2) |
| 28 | AD_VOLT | I | Voltage signal input terminal. |
| 29 | AD_FREQ2 | I | Frequency display input terminal. (ch 3/4) |
| 30 | AD_THRM | I | Temperature signal input terminal. |
| 31 | /AD_THRM_DET | I | Temperature detection input terminal. |
| 32 | LED | O | LED (Back Light) ON output terminal. |
| 33 | MUTE | O | MUTE output terminal. |
| 34 | VAREF | - | Analog reference power supply terminal for A/D converter. |
| 35 | AVDD | - | Power supply terminal for A/D converter. |
| 36 | AVSS | - | Analog reference GND terminal for A/D converter. |
| 37 | VOL_CE1 | O | E-VOL chip enable terminal. (ch 1/2) |
| 38 | VOL_CE2 | O | E-VOL chip enable terminal. (ch 3/4) |
| 39 | VOL_CL | O | E-VOL synchronous clock terminal. |
| 40 | VOL_DI | O | E-VOL transmission data terminal. |
| 41 | LCD_CE | O | LCD driver chip enable terminal. |
| 42 | LCD_DI | O | LCD driver transmission data terminal. |
| 43 | LCD_CLK | O | LCD driver synchronous clock terminal. |
| 44 | LCD_INH | O | LCD driver INH terminal. |

TO SCHEMATIC TO CONTENTS

# Exploded View (Cabinet)

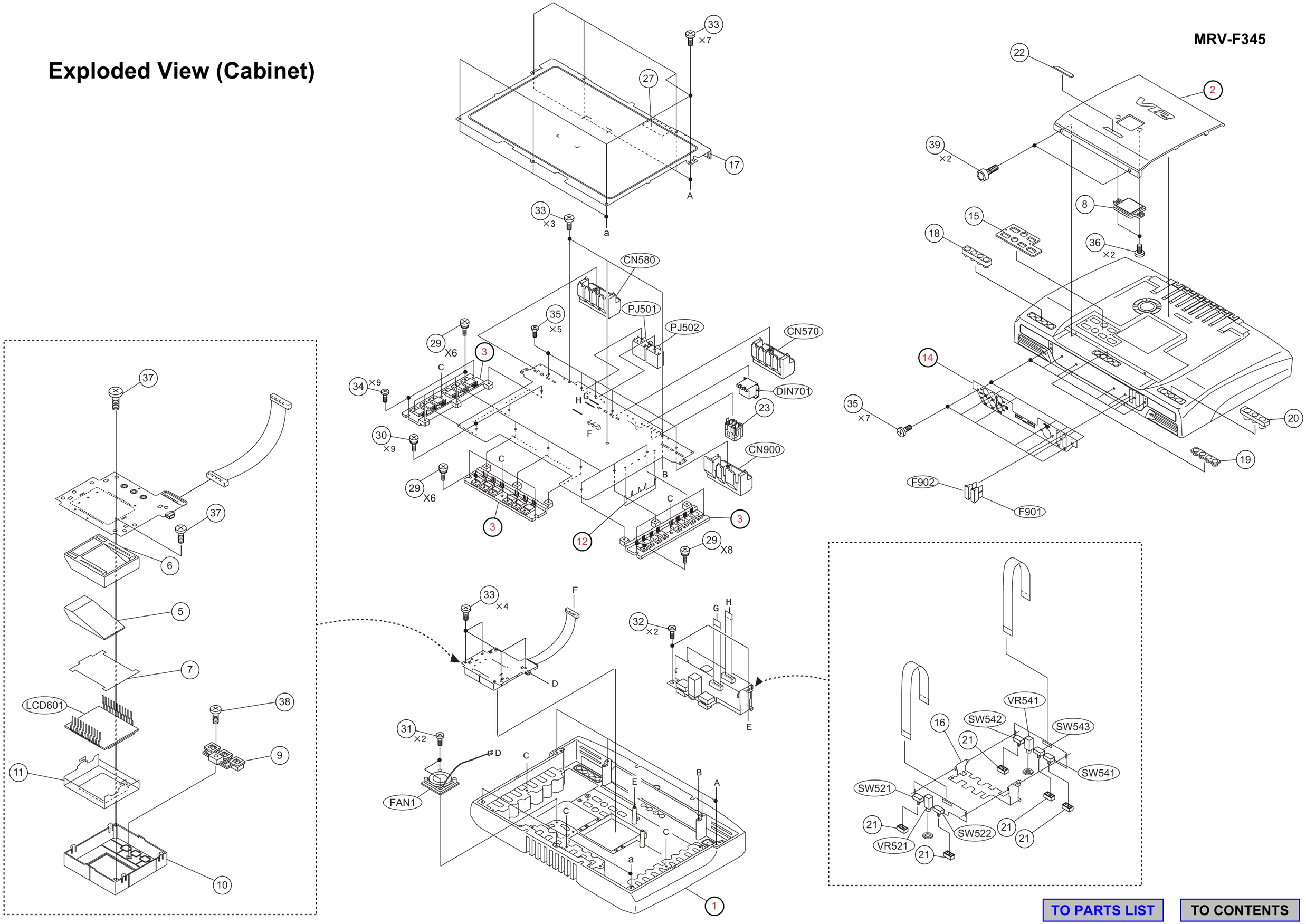


TO PARTS LIST
TO CONTENTS