ALPINE®

SERVICE MANUAL

4/3/2 Channel Power Amplifier

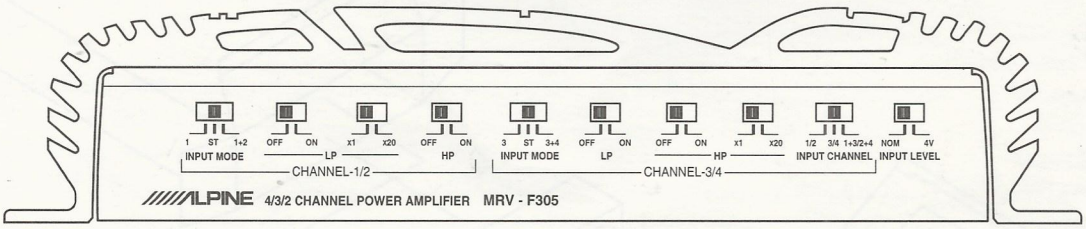

サービス費用区分	B
技術資料No.	PM-68-O

MRV-F305

Contents

Packing Assembly Parts List 3
Packing Method View 3
Specifications 4
Adjustment Procedures 5
Block Diagram 6
Parts Layout on P.C. Boards and Wiring Diagram ..... 7 to 8
Schematic Diagram (1/2) ..... 9 to 11
Schematic Diagram (2/2) ..... 12 to 14
Electrical Parts List ..... 15 to 21
Cabinet Assembly Parts List 22
Exploded View (Cabinet) ..... 23 to 24

Packing Assembly Parts List

Symbol No.	Part No.	Description
	101-1	15A81064F01	Housing Rubber
	101-2	15A81064F03	Housing Rubber
	101-3	75E10203S01	Housing Rubber (B)
	101-4	65E25552S01	Fuse, Auto 30A (For Battery Line)
	101-5	03E22368S01	Screw, Tapping (M4X14)
○	102	68P90664W55	Owner's Manual
△	102	68P90664W56	Owner's Manual (I/G/S)
△	102	68P90664W92	Owner's Manual
□	102	68P90664W57	Owner's Manual
△	103-1	28E21976S01	Remote Cord

Symbol No.	Part No.	Description
□	103-1	28E21976S01	Remote Cord
△	103-2	01E21979S01	Assy., Power Wire
□	103-2	01E21979S01	Assy., Power Wire
□	103-3	01E22738S01	Assy., Speaker Wire

NOTE : ○: For MRV-F305 (North American) Model Only, △: For MRV-F305 (General Foreign) Model Only,
□: For MRV-F305 (Japanese) Model Only, Others : Common.

Packing Method View

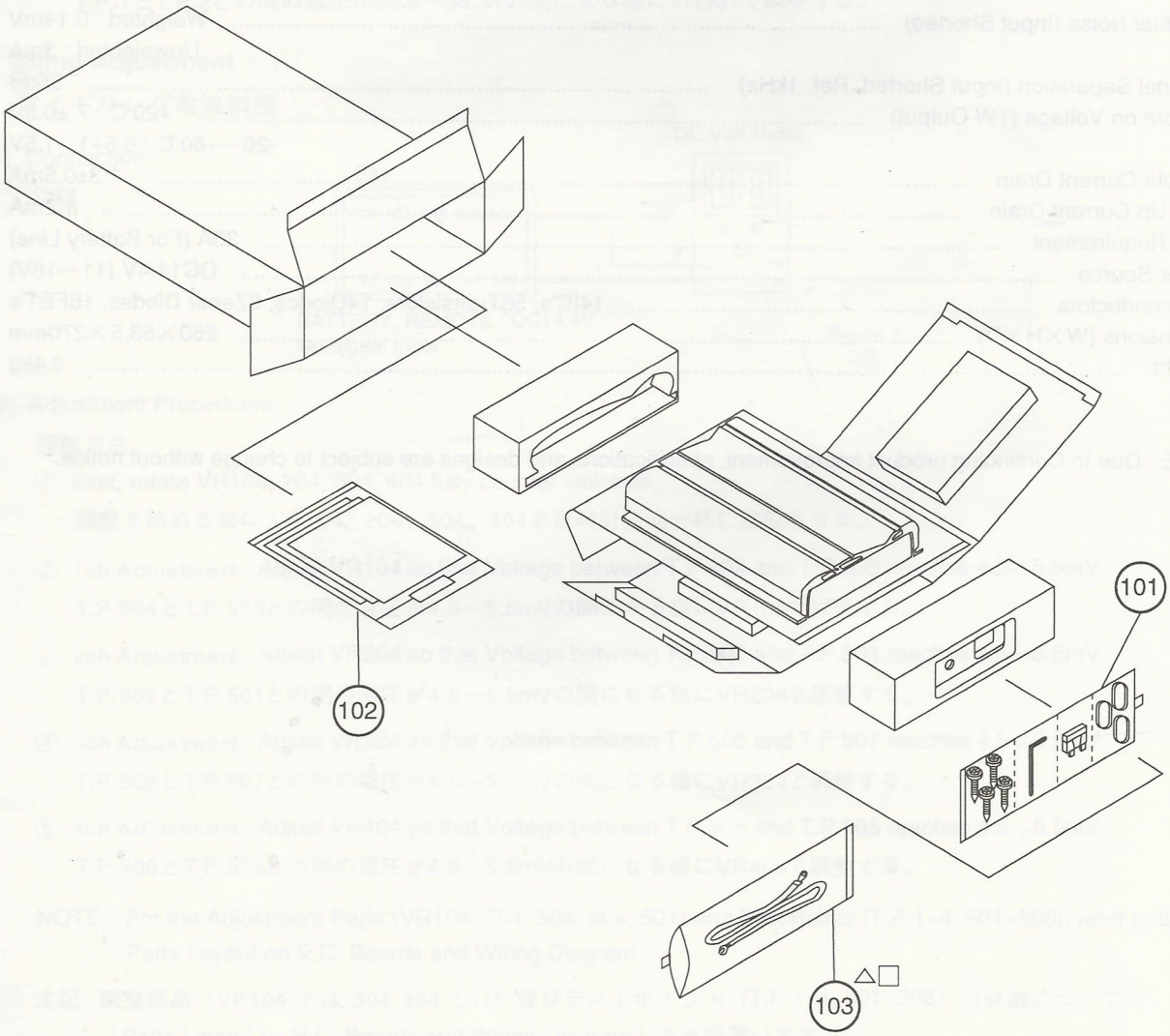

NOTE: ○ : For MRV-F305 (North American) Model Only, △ : For MRV-F305 (General Foreign) Model Only,
□ : For MRV-F305 (Japanese) Model Only, Others : Common.

Specifications

Power Output	4ohm-4channel, 0.2% (20Hz~20kHz) T.H.D., 14.4V : 50W
	4ohm-4channel, 0.2% (20Hz~20kHz) T.H.D., 12V : 35W
	2ohm-4channel, 1% (20Hz~20kHz) T.H.D., 14.4V : 60W
	2ohm-4channel, 1% (20Hz~20kHz) T.H.D., 12V : 45W
	4ohm-2channel, 1% (20Hz~20kHz) T.H.D., 14.4V, BTL : 120W
	4ohm-2channel, 1% (20Hz~20kHz) T.H.D., 12V, BTL : 90W
S/N Ratio (Ref. Output 50W/ch/4ohm, Input Shorted)	100dB
Input Sensitivity	SP. 50W/ch Output, CW : 0.2V±3dB
	SP. 50W/ch Output, CENTER : 1V±3dB
	SP. 50W/ch Output, CCW : 4V±3dB
	SP. 50W/ch Output, 4V Switch ON : 4V±3dB
	Pre Output 1V, CENTER : 1V+1, -3dB
Input Impedance	27±6k ohm
Output Impedance (Pre Output Only)	200 ohm
Ferquency Response (-1dB, Ref. 1kHz)	20Hz～40kHz
Current Drain	Input Shorted : 1.5A
	4ohm-4channel, 10% T.H.D. : 40A
	2ohm-4channel, 10% T.H.D. : 60A
Residual Noise (Input Shorted)	Weighted : 0.14mV
	Unweighted : 3mA
Channel Separation (Input Shorted, Ref. 1kHz)	55dB
Remote on Voltage (1W Output)	+20℃ : 7 ±0.5V
	-20～+60℃ : 6.5+1, -1.5V
Remote Current Drain	1.3±0.5mA
Back Up Current Drain	1.2mA
Fuse Requirement	30A (For Battery Line)
Power Source	DC14.4V (11～16V)
Semiconductors	14IC's, 56Transistors, 14Diodes, 8Zener Diodes, 16FET's
Dimensions (W×H×D)	260×53.5×270mm
Weight	3.4kg

NOTE : Due to Continuing product improvement, specifications and designs are subject to change without notice.

Adjustment Procedures

1. Power Supply Voltage Adjustment
2次電源電圧調整

(1) Connection
接続

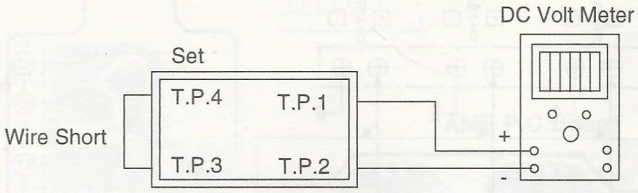

BATTERY, REMOTE : DC14.4V
No Signal Input

Figure 1
1図

(2) Adjustment Procedures
調整方法

① First, rotate VR501 fully counter clokwise.
調整を始める前に VR501を反時計方向一杯に回転させる。

② Adjust VR501 so that Voltage between T.P.1 and T.P.2 reaches 55.5～56.5V.
T.P.1とT.P.2との間の電圧が55.5～56.5Vの間になる様にVR501で調整する。

2. Idling Adjustment
アイドリング電流調整

(1) Connection
接続

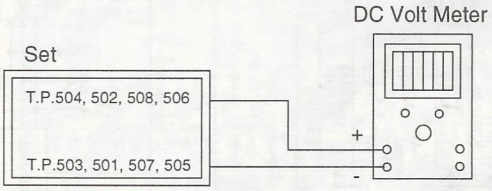

BATTERY, REMOTE : DC14.4V
No Signal Input

Figure 2
2図

(2) Adjustment Procedures
調整方法

① First, rotate VR104, 204, 304, 404 fully counter clokwise.
調整を始める前に VR104、204、304、404を反時計方向一杯に回転させる。

② 1ch Adjustment : Adjust VR104 so that Voltage between T.P.504 and T.P.503 reaches 4.5～5.5mV.
T.P.504とT.P.503との間の電圧が4.5～5.5mVの間になる様にVR104で調整する。

③ 2ch Adjustment : Adjust VR204 so that Voltage between T.P.502 and T.P.501 reaches 4.5～5.5mV.
T.P.502とT.P.501との間の電圧が4.5～5.5mVの間になる様にVR204で調整する。

④ 3ch Adjustment : Adjust VR304 so that Voltage between T.P.508 and T.P.507 reaches 4.5～5.5mV.
T.P.508とT.P.507との間の電圧が4.5～5.5mVの間になる様にVR304で調整する。

⑤ 4ch Adjustment : Adjust VR404 so that Voltage between T.P.506 and T.P.505 reaches 4.5～5.5mV.
T.P.506とT.P.505との間の電圧が4.5～5.5mVの間になる様にVR404で調整する。

NOTE : For the Adjustment Parts (VR104, 204, 304, 404, 501) and Test Points (T.P.1~4, 501~508), refer to the Parts Layout on P.C. Boards and Wiring Diagram.

注記 : 調整部品（VR104, 204, 304, 404, 501）及びテストポイント（T.P.1~4, 501~508）の詳細については、「Parts Layout on P.C. Boards and Wiring Diagram」を参照願います。

Block Diagram

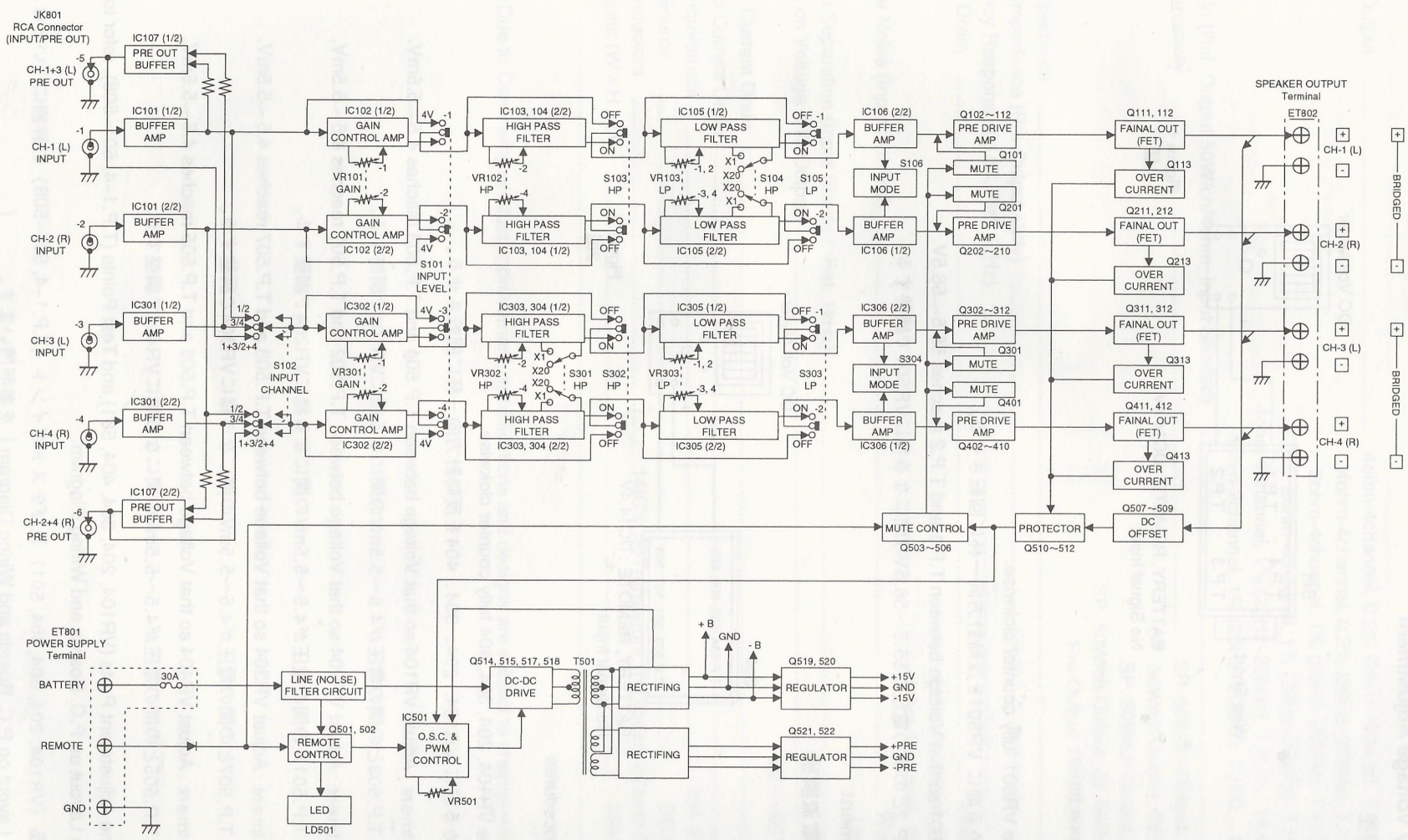

Parts Layout on P.C. Boards and Wiring Diagram

All P.C. Boards viewed from soldered side.

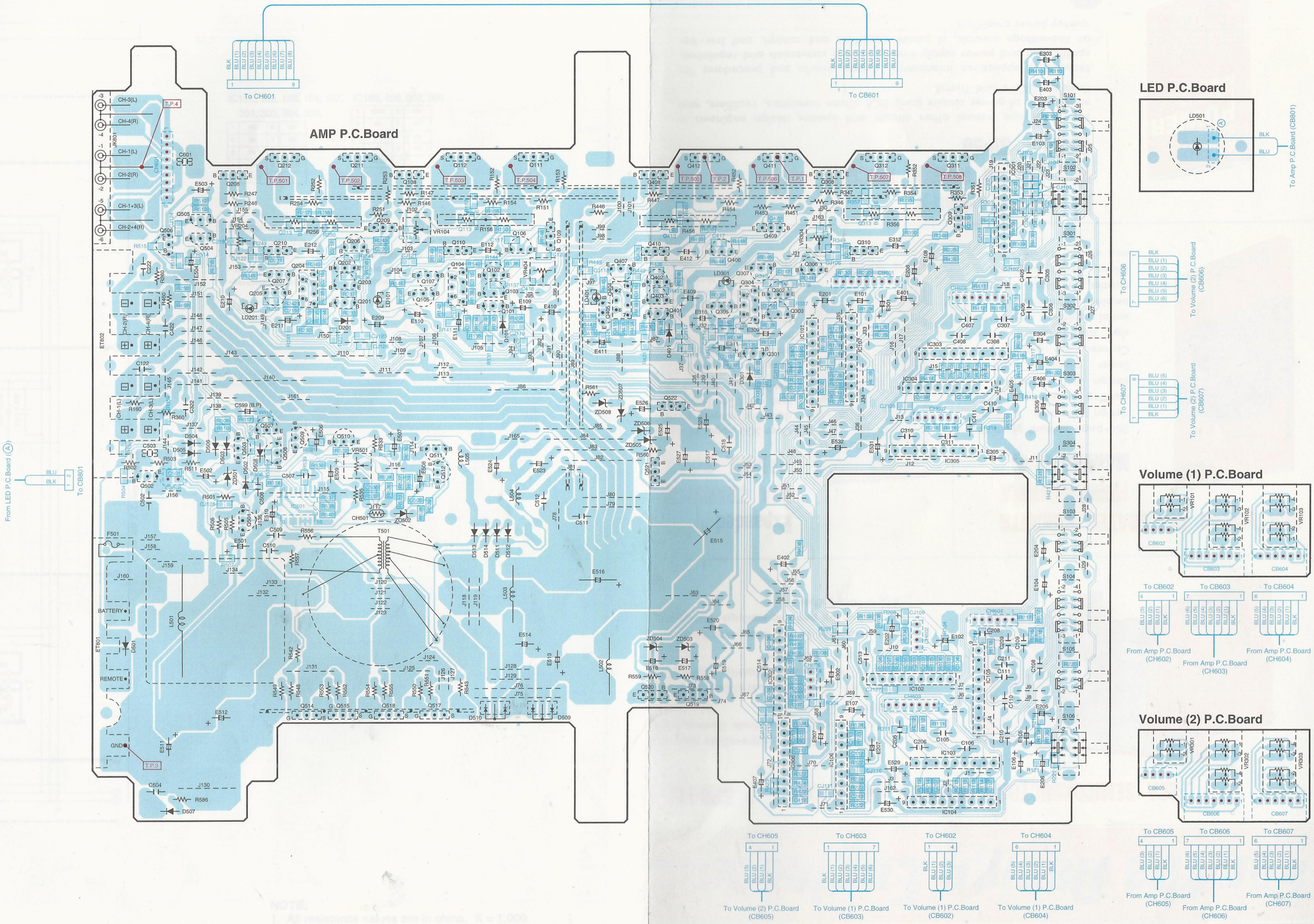

Blue Color Pattern : Foil Side Pattern

Schematic Diagram (1/2)

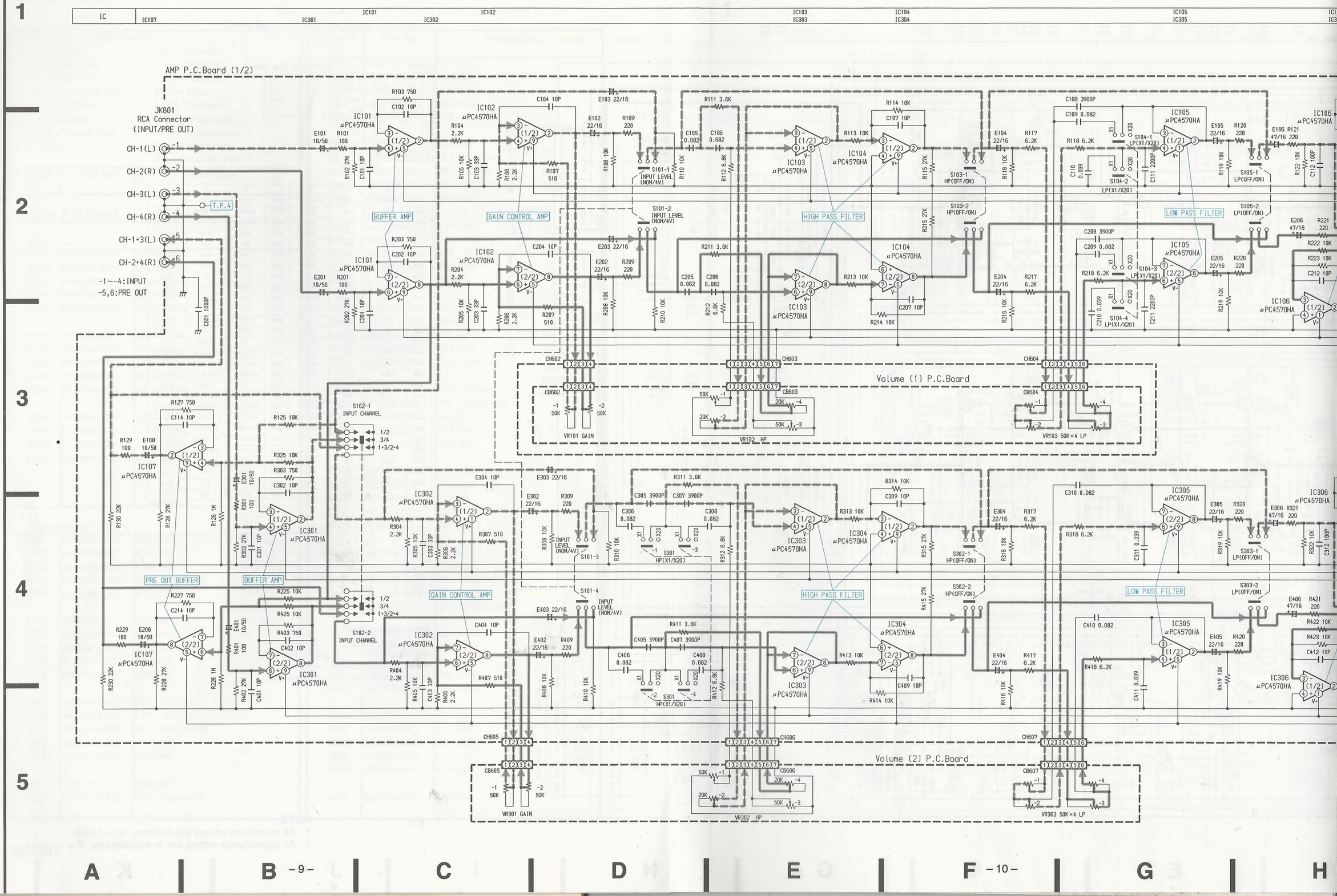

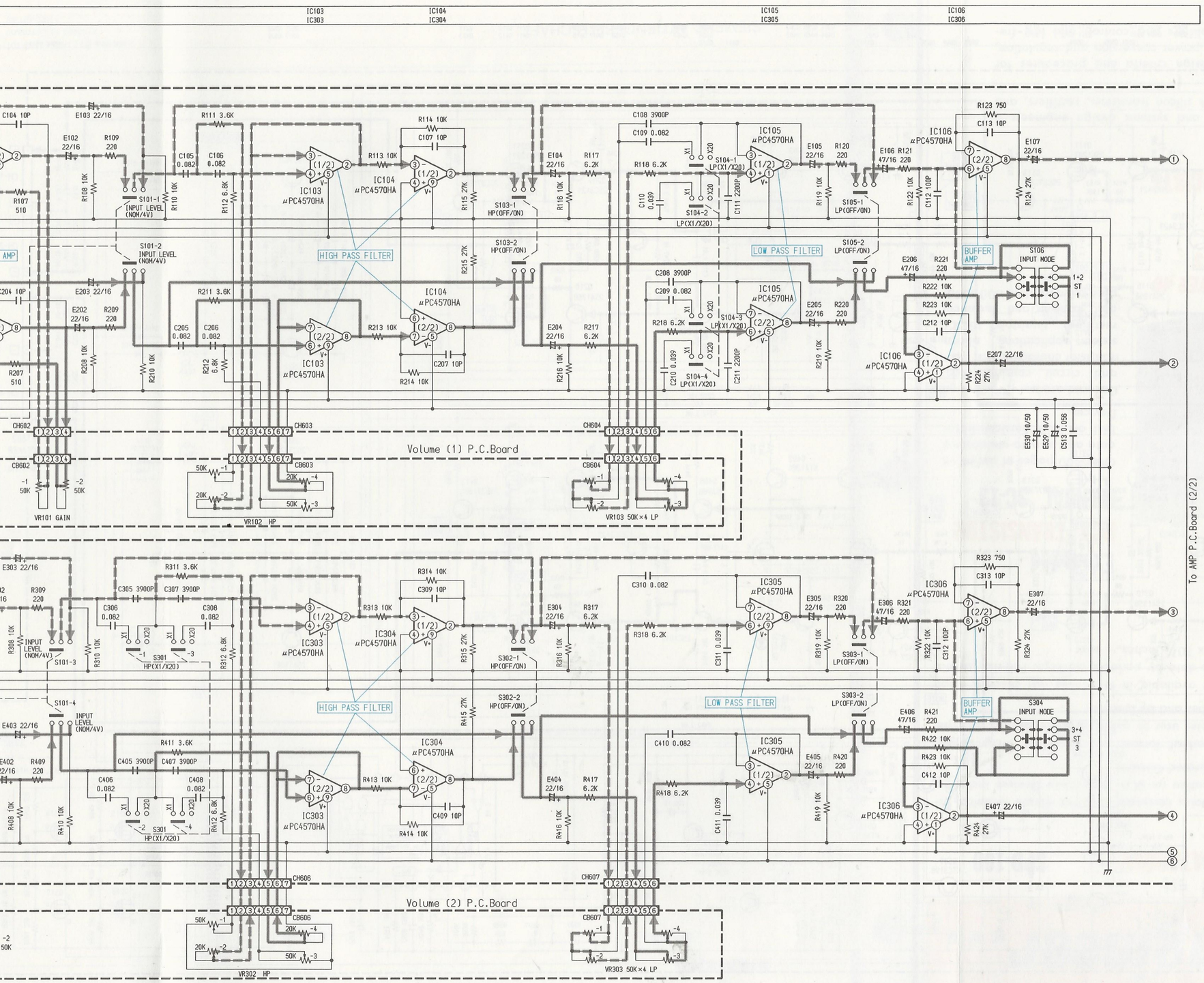

IC101, 102, 103, 104, 107, 301, 303, 304, 305,

1	NC	6	0V
2	0V	7	0V
3	0V	8	0V
4	0V	9	15.3V
5	-15.3V		

IC105, 106, 302, 306

1	15.3V	6	0V
2	0V	7	0V
3	0V	8	0V
4	0V	9	NC
5	-15.3V		

[Measuring Conditions]

- Power Supply Voltage : DC14.4V
- Measuring Meter : Digital Multi Meter
- Measuring Point Reference : Between GND
- Measuring Conditions : No Signal Input

NOTE:

1. All resistance values are in ohms. K = 1,000
2. All capacitance values are in microfarads. $P = \frac{1}{1,000,000}$

Schematic Diagram (2/2)

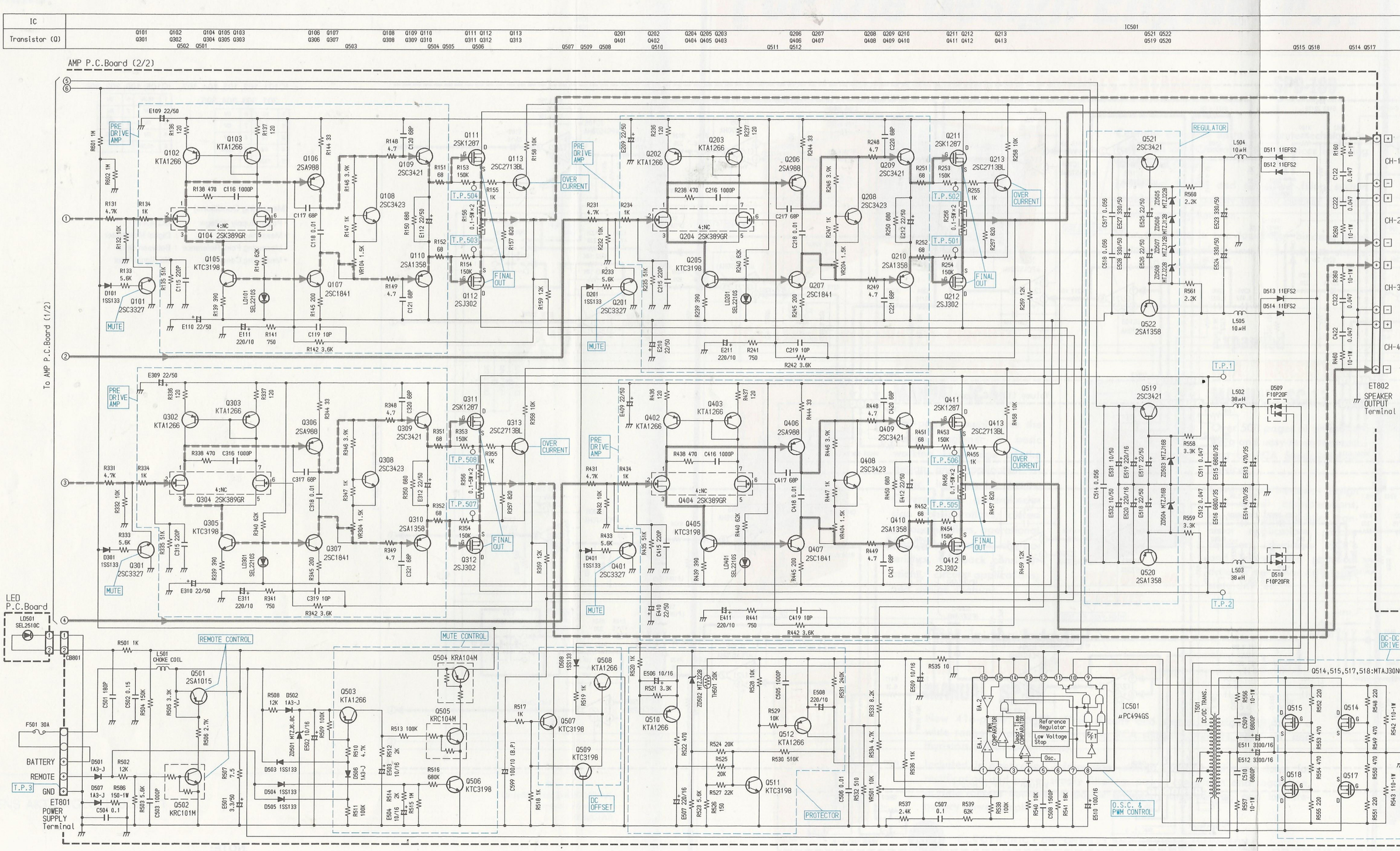

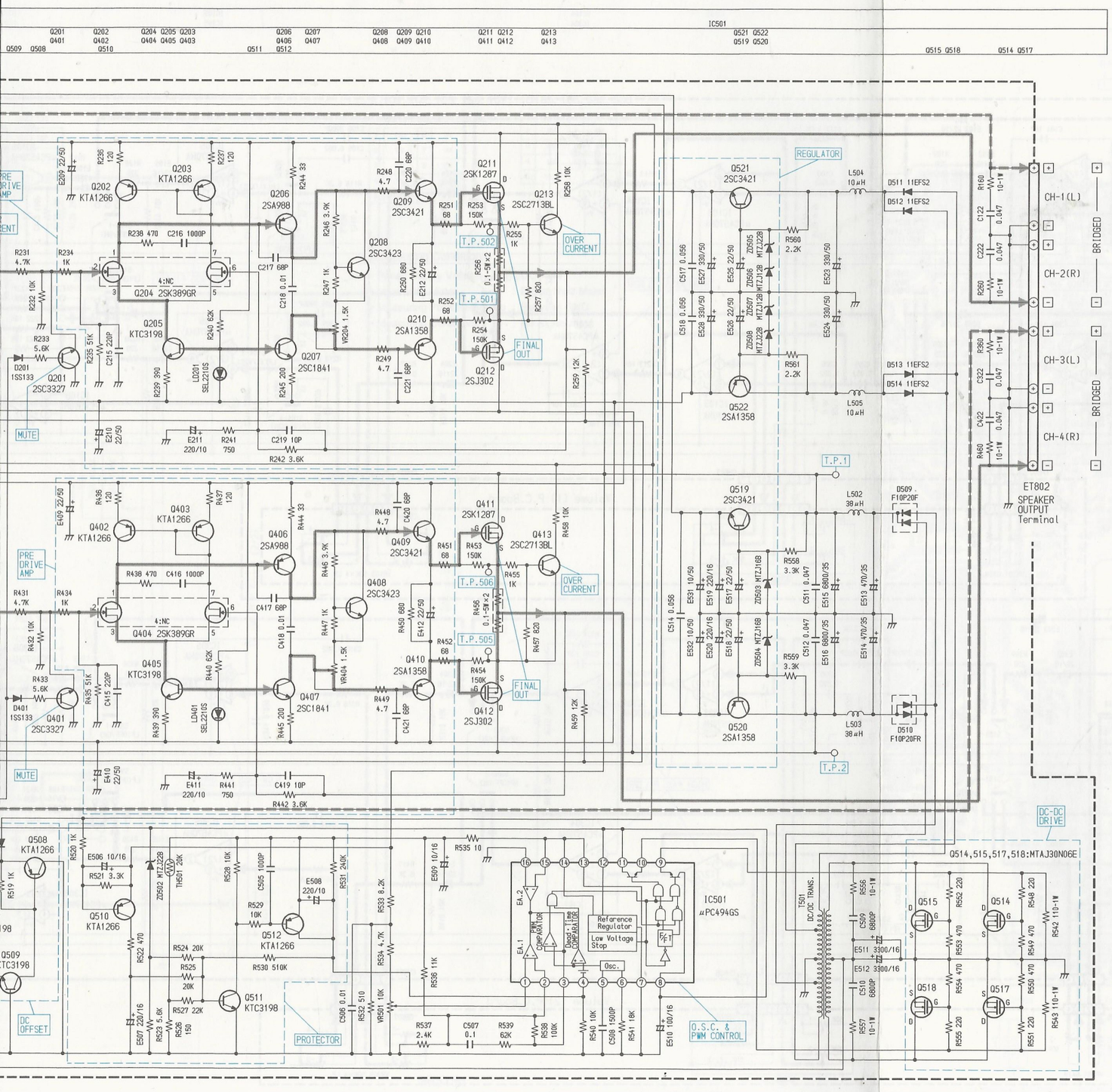

IC501

1	0.95V (0V)	9	0.6V (0V)
2	0.95V (0.83V)	10	0.7V (0V)
3	3.76V (0V)	11	14.2V
4	0.2V (4.68V)	12	14.2V
5	1.7V	13	5V
6	3.67V	14	5V
7	0V	15	5V
8	14.3V	16	0V

(PROTECT ON)

Q104, 204, 304, 404

1	31.6V	5	0V
2	0.3V	6	0.3V
3	0V	7	31.6V
4	NC		

	E	C	B		E	C	B
Q101	0V (0V)	0V (0V)	0V (0.7V)	Q310	-1.8V	-32V	-2.1V
Q102	32V	31.4V	31.5V	Q313	0V (0V)	28V (8mV)	0V (0.6V)
Q103	32V	31.5V	31.5V	Q401	0V (0V)	0V (0V)	0V (0.7V)
Q105	-31V	0.3V	-30.5V	Q402	32V	31.4V	31.5V
Q106	32.3V	2.2V	31.4V	Q403	32V	31.5V	31.5V
Q107	-31V	-2V	-30.5V	Q405	-31V	0.3V	-30.5V
Q108	-0.85V	2.1V	-0.23V	Q406	32.3V	2.2V	31.4V
Q109	1.7V	32V	2.1V	Q407	-31V	-2V	-30.5V
Q110	-1.8V	-32V	-2.1V	Q408	-0.85V	2.1V	-0.23V
Q113	0V (0V)	28V (8mV)	0V (0.6V)	Q409	1.7V	32V	2.1V
Q201	0V (0V)	0V (0V)	0V (0.7V)	Q410	-1.8V	-32V	-2.1V
Q202	32V	31.4V	31.5V	Q413	0V (0V)	28V (8mV)	0V (0.6V)
Q203	32V	31.5V	31.5V	Q501	14.4V	14.1V	13.5V
Q205	-31V	0.3V	-30.5V	Q502	0V	(0.04V)	2.7V
Q206	32.3V	2.2V	31.4V	Q503	6.75V (6.74V)	0V (6.73V)	6.68V (6.14V)
Q207	-31V	-2V	-30.5V	Q504	14.4V (14.4V)	-7.5V (14.38V)	14.25V (0.14V)
Q208	-0.85V	2.1V	-0.23V	Q505	0V (0.06V)	14.25V (0.12V)	0V (2.5V)
Q209	1.7V	32V	2.1V	Q506	0V	5.2mV	0.56V
Q210	-1.8V	-32V	-2.1V	Q507	0V (0V)	27.3V (0.1V)	0V (0.6V)
Q213	0V (0V)	28V (8mV)	0V (0.6V)	Q508	27.3V (2.6V)	0V (0V)	27.3V (3.5V)
Q301	0V (0V)	0V (0V)	0V (0.7V)	Q509	0V (-0.6V)	27.3V (15mV)	0V (0V)
Q302	32V	31.4V	31.5V	Q510	28V (28V)	0V (27.8V)	28V (27.3V)
Q303	32V	31.5V	31.5V	Q511	0V (0V)	5V (20mV)	0V (0.65V)
Q305	-31V	0.3V	-30.5V	Q512	5V (5V)	0.2V (4.9V)	5V (4.3V)
Q306	32.3V	2.2V	31.4V	Q519	15.3V	28V	15.9V
Q307	-31V	-2V	-30.5V	Q520	-15.3V	-28V	-15.9V
Q308	-0.85V	2.1V	-0.23V	Q521	32.5V	35V	33.1V
Q309	1.7V	32V	2.1V	Q522	-32.5V	-35V	-33.1V

(PROTECT ON)

	S	D	G		S	D	G
Q111	0V	28V	1.5V	Q411	0V	28V	1.5V
Q112	0V	-28V	-1.6V	Q412	0V	-28V	-1.6V
Q211	0V	28V	1.5V	Q514	0V	14.4V	2.4V
Q212	0V	-28V	-1.6V	Q515	0V	14.4V	2.4V
Q311	0V	28V	1.5V	Q517	0V	14.4V	2.4V
Q312	0V	-28V	-1.6V	Q518	0V	14.4V	2.4V

[Measuring Conditions]

- Power Supply Voltage : DC14.4V
- Measuring Meter : Digital Multi Meter
- Measuring Point Reference : Between GND
- Measuring Conditions : No Signal Input

NOTE:

1. All resistance values are in ohms. K = 1,000
2. All capacitance values are in microfarads. $P = \frac{1}{1,000,000}$

Electrical Parts List

Resistor : Carbon resistors under 1/4 watts are not mentioned in the parts list, please confirm them by schematic diagram.
Capacitor : μF=microfarads,pF=picofarads

Abbreviations

RES.= Resistor	CAP.= Capacitor
C.F.= Carbon Film	ELY.= Electrolytic
M.F.= Metal Film	CER.= Ceramic
M.O.= Metal Oxide Film	MYL.= Mylar
M.P.= Metal Plate	TAN.= Tantalum
TR. = Transistor	POLY.= Polystyrol
TRANS.= Transformer	PP. = Polypropylene
CP. = Chip	PLT.= Polyethylene
	PF. = Polyester Film

Symbol No.	Part No.	Description
Main P.C.Board		
IC's		
IC101	51E03808S01	μPC4570HA
IC102	51E03808S01	μPC4570HA
IC103	51E03808S01	μPC4570HA
IC104	51E03808S01	μPC4570HA
IC105	51E03808S01	μPC4570HA
IC106	51E03808S01	μPC4570HA
IC107	51E03808S01	μPC4570HA
IC301	51E03808S01	μPC4570HA
IC302	51E03808S01	μPC4570HA
IC303	51E03808S01	μPC4570HA
IC304	51E03808S01	μPC4570HA
IC305	51E03808S01	μPC4570HA
IC306	51E03808S01	μPC4570HA
IC501	51E25816S01	μPC494GS
Transistors / FET's		
Q101	48E25625S01	2SC3327
Q102	48E25656S01	KTA1266
Q103	48E25656S01	KTA1266
Q104	48E23418S01	FET, 2SK389GR
Q105	48E25657S01	KTC3198
Q106	48E25660S01	2SA988
Q107	48E25659S01	2SC1841
Q108	48E23414S01	2SC3423
Q109	48E04071S01	2SC3421
Q110	48E04070S01	2SA1358
Q111	48E25818S01	FET, 2SK1287
Q112	48E25819S01	FET, 2SJ302
Q113	48E25696S01	CP., 2SC2713BL
Q201	48E25625S01	2SC3327
Q202	48E25656S01	KTA1266
Q203	48E25656S01	KTA1266
Q204	48E23418S01	FET, 2SK389GR
Q205	48E25657S01	KTC3198
Q206	48E25660S01	2SA988
Q207	48E25659S01	2SC1841
Q208	48E23414S01	2SC3423
Q209	48E04071S01	2SC3421
Q210	48E04070S01	2SA1358
Q211	48E25818S01	FET, 2SK1287
Q212	48E25819S01	FET, 2SJ302
Q213	48E25696S01	CP., 2SC2713BL
Q301	48E25625S01	2SC3327
Q302	48E25656S01	KTA1266
Q303	48E25656S01	KTA1266
Q304	48E23418S01	FET, 2SK389GR
Q305	48E25657S01	KTC3198
Q306	48E25660S01	2SA988
Q307	48E25659S01	2SC1841
Q308	48E23414S01	2SC3423
Q309	48E04071S01	2SC3421
Q310	48E04070S01	2SA1358
Q311	48E25818S01	FET, 2SK1287
Q312	48E25819S01	FET, 2SJ302
Q313	48E25696S01	CP., 2SC2713BL
Q401	48E25625S01	2SC3327
Q402	48E25656S01	KTA1266
Q403	48E25656S01	KTA1266
Q404	48E23418S01	FET, 2SK389GR
Q405	48E25657S01	KTC3198
Q406	48E25660S01	2SA988
Q407	48E25659S01	2SC1841
Q408	48E23414S01	2SC3423
Q409	48E04071S01	2SC3421
Q410	48E04070S01	2SA1358
Q411	48E25818S01	FET, 2SK1287
Q412	48E25819S01	FET, 2SJ302
Q413	48E25696S01	CP., 2SC2713BL
Q501	48E25658S01	2SA1015
Q502	48E25661S01	KRC101M
Q503	48E25656S01	KTA1266
Q504	48E25663S01	KRA104M
Q505	48E25662S01	KRC104M
Q506	48E25657S01	KTC3198
Q507	48E25657S01	KTC3198
Q508	48E25656S01	KTA1266
Q509	48E25657S01	KTC3198
Q510	48E25656S01	KTA1266
Q511	48E25657S01	KTC3198

Symbol No.	Part No.	Description
Q512	48E25656S01	KTA1266
Q514	48E25211S01	FET, MTAJ30N06E
Q515	48E25211S01	FET, MTAJ30N06E
Q517	48E25211S01	FET, MTAJ30N06E
Q518	48E25211S01	FET, MTAJ30N06E
Q519	48E04071S01	2SC3421
Q520	48E04070S01	2SA1358
Q521	48E04071S01	2SC3421
Q522	48E04070S01	2SA1358
Diodes		
D101	48E25648S01	1SS133
D201	48E25648S01	1SS133
D301	48E25648S01	1SS133
D401	48E25648S01	1SS133
D501	48E25654S01	1A3-J
D502	48E25654S01	1A3-J
D503	48E25648S01	1SS133
D504	48E25648S01	1SS133
D505	48E25648S01	1SS133
D506	48E25654S01	1A3-J
D507	48E25654S01	1A3-J
D508	48E25648S01	1SS133
D509	48E09190S01	F10P20F
D510	48E09190S02	F10P20FR
D511	48E25655S01	11EFS2
D512	48E25655S01	11EFS2
D513	48E25655S01	11EFS2
D514	48E25655S01	11EFS2
ZD501	48E25653S01	Zener, MTZJ6.8C
ZD502	48E25652S01	Zener, MTZJ22B
ZD503	48E25651S01	Zener, MTZJ16B
ZD504	48E25651S01	Zener, MTZJ16B
ZD505	48E25652S01	Zener, MTZJ22B
ZD506	48E25781S01	Zener, MTZJ12B
ZD507	48E25781S01	Zener, MTZJ12B
ZD508	48E25652S01	Zener, MTZJ22B
Coils		
L501	24E25699S01	Choke
L502	24E25698S01	38μH
L503	24E25698S01	38μH
L504	24E25669S01	10μH
L505	24E25669S01	10μH

Symbol No.	Part No.	Description
Switches		
S101	40E09137S01	Slide, SSSF12 (4-2) (INPUT LEVEL ・NOM/4V)
S102	40E22009S01	Slide, SSSF12 (2-3) (INPUT CHANNEL)
S103	40E09464S01	Slide, SSSF12 (2-2) (HP ・OFF/ON)
S104	40E09137S01	Slide, SSSF12 (4-2) (LP ・X1/X20)
S105	40E09464S01	Slide, SSSF12 (2-2) (LP ・OFF/ON)
S106	40E22009S01	Slide, SSSF12 (2-3) (INPUT MODE)
S301	40E09137S01	Slide, SSSF12 (4-2) (HP ・X1/X20)
S302	40E09464S01	Slide, SSSF12 (2-2) (HP ・OFF/ON)
S303	40E09464S01	Slide, SSSF12 (2-2) (LP ・OFF/ON)
S304	40E22009S01	Slide, SSSF12 (2-3) (INPUT MODE)
LED's		
LD101	48E25701S01	SEL2210S (RED)
LD201	48E25701S01	SEL2210S (RED)
LD301	48E25701S01	SEL2210S (RED)
LD401	48E25701S01	SEL2210S (RED)
Thermistor		
TH501	48E11405S01	20K ohm
Transformer		
T501	25E25817S01	DC/DC
Capacitors		
C101	08E25693S01	CP., 10pF
or	08E25694S01	CP., 10pF
E101	23E25645S01	ELY., 10μF / 50V
C102	08E25693S01	CP., 10pF
or	08E25694S01	CP., 10pF
E102	23E25640S01	ELY., 22μF / 16V
C103	08E25689S01	CP., 33pF
E103	23E25640S01	ELY., 22μF / 16V
C104	08E25693S01	CP., 10pF
or	08E25694S01	CP., 10pF
E104	23E25640S01	ELY., 22μF / 16V
C105	08E25635S01	POLY., 0.082μF
E105	23E25640S01	ELY., 22μF / 16V
C106	08E25635S01	POLY., 0.082μF
E106	23E25641S01	ELY., 47μF / 16V

Symbol No.	Part No.	Description
C107	08E25693S01	CP., 10pF
or	08E25694S01	CP., 10pF
E107	23E25640S01	ELY., 22μF / 16V
C108	08E25628S01	POLY., 3900pF
E108	23E25645S01	ELY., 10μF / 50V
C109	08E25635S01	POLY., 0.082μF
E109	23E25780S01	ELY., 22μF / 50V
C110	08E25632S01	POLY., 0.039μF
E110	23E25780S01	ELY., 22μF / 50V
C111	08E25627S01	POLY., 2200pF
E111	23E25638S01	ELY., 220μF / 10V
C112	08E25691S01	CP., 100pF
E112	23E25780S01	ELY., 22μF / 50V
C113	08E25693S01	CP., 10pF
or	08E25694S01	CP., 10pF
C114	08E25693S01	CP., 10pF
or	08E25694S01	CP., 10pF
C115	08E25814S01	CP., 220pF
C116	08E25688S01	CP., 1000pF
C117	08E25813S01	CP., 68pF
C118	08E25815S01	CP., 0.01μF
C119	08E25693S01	CP., 10pF
or	08E25694S01	CP., 10pF
C120	08E25695S01	CP., 68pF
C121	08E25695S01	CP., 68pF
C122	08E25633S01	POLY., 0.047μF
C201	08E25693S01	CP., 10pF
or	08E25694S01	CP., 10pF
E201	23E25645S01	ELY., 10μF / 50V
C202	08E25693S01	CP., 10pF
or	08E25694S01	CP., 10pF
E202	23E25640S01	ELY., 22μF / 16V
C203	08E25689S01	CP., 33pF
E203	23E25640S01	ELY., 22μF / 16V
C204	08E25693S01	CP., 10pF
or	08E25694S01	CP., 10pF
E204	23E25640S01	ELY., 22μF / 16V
C205	08E25635S01	POLY., 0.082μF
E205	23E25640S01	ELY., 22μF / 16V
C206	08E25635S01	POLY., 0.082μF
E206	23E25641S01	ELY., 47μF / 16V
C207	08E25693S01	CP., 10pF
or	08E25694S01	CP., 10pF
E207	23E25640S01	ELY., 22μF / 16V
C208	08E25628S01	POLY., 3900pF
E208	23E25645S01	ELY., 10μF / 50V
C209	08E25635S01	POLY., 0.082μF
E209	23E25780S01	ELY., 22μF / 50V
C210	08E25632S01	POLY., 0.039μF

Symbol No.	Part No.	Description
E210	23E25780S01	ELY., 22μF / 50V
C211	08E25627S01	POLY., 2200pF
E211	23E25638S01	ELY., 220μF / 10V
C212	08E25693S01	CP., 10pF
or	08E25694S01	CP., 10pF
E212	23E25780S01	ELY., 22μF / 50V
C214	08E25693S01	CP., 10pF
or	08E25694S01	CP., 10pF
C215	08E25814S01	CP., 220pF
C216	08E25688S01	CP., 1000pF
C217	08E25813S01	CP., 68pF
C218	08E25815S01	CP., 0.01μF
C219	08E25693S01	CP., 10pF
or	08E25694S01	CP., 10pF
C220	08E25695S01	CP., 68pF
C221	08E25695S01	CP., 68pF
C222	08E25633S01	POLY., 0.047μF
C301	08E25693S01	CP., 10pF
or	08E25694S01	CP., 10pF
E301	23E25645S01	ELY., 10μF / 50V
C302	08E25693S01	CP., 10pF
or	08E25694S01	CP., 10pF
E302	23E25640S01	ELY., 22μF / 16V
C303	08E25689S01	CP., 33pF
E303	23E25640S01	ELY., 22μF / 16V
C304	08E25693S01	CP., 10pF
or	08E25694S01	CP., 10pF
E304	23E25640S01	ELY., 22μF / 16V
C305	08E25628S01	POLY., 3900pF
E305	23E25640S01	ELY., 22μF / 16V
C306	08E25635S01	POLY., 0.082μF
E306	23E25641S01	ELY., 47μF / 16V
C307	08E25628S01	POLY., 3900pF
E307	23E25640S01	ELY., 22μF / 16V
C308	08E25635S01	POLY., 0.082μF
C309	08E25693S01	CP., 10pF
or	08E25694S01	CP., 10pF
E309	23E25780S01	ELY., 22μF / 50V
C310	08E25635S01	POLY., 0.082μF
E310	23E25780S01	ELY., 22μF / 50V
C311	08E25632S01	POLY., 0.039μF
E311	23E25638S01	ELY., 220μF / 10V
C312	08E25691S01	CP., 100pF
E312	23E25780S01	ELY., 22μF / 50V
C313	08E25693S01	CP., 10pF
or	08E25694S01	CP., 10pF
C315	08E25814S01	CP., 220pF
C316	08E25688S01	CP., 1000pF
C317	08E25813S01	CP., 68pF

Symbol No.	Part No.	Description
C318	08E25815S01	CP., 0.01μF
C319	08E25693S01	CP., 10pF
or	08E25694S01	CP., 10pF
C320	08E25695S01	CP., 68pF
C321	08E25695S01	CP., 68pF
C322	08E25633S01	POLY., 0.047μF
C401	08E25693S01	CP., 10pF
or	08E25694S01	CP., 10pF
E401	23E25645S01	ELY., 10μF / 50V
C402	08E25693S01	CP., 10pF
or	08E25694S01	CP., 10pF
E402	23E25640S01	ELY., 22μF / 16V
C403	08E25689S01	CP., 33pF
E403	23E25640S01	ELY., 22μF / 16V
C404	08E25693S01	CP., 10pF
or	08E25694S01	CP., 10pF
E404	23E25640S01	ELY., 22μF / 16V
C405	08E25628S01	POLY., 3900pF
E405	23E25640S01	ELY., 22μF / 16V
C406	08E25635S01	POLY., 0.082μF
E406	23E25641S01	ELY., 47μF / 16V
C407	08E25628S01	POLY., 3900pF
E407	23E25640S01	ELY., 22μF / 16V
C408	08E25635S01	POLY., 0.082μF
C409	08E25693S01	CP., 10pF
or	08E25694S01	CP., 10pF
E409	23E25780S01	ELY., 22μF / 50V
C410	08E25635S01	POLY., 0.082μF
E410	23E25780S01	ELY., 22μF / 50V
C411	08E25632S01	POLY., 0.039μF
E411	23E25638S01	ELY., 220μF / 10V
C412	08E25693S01	CP., 10pF
or	08E25694S01	CP., 10pF
E412	23E25780S01	ELY., 22μF / 50V
C415	08E25814S01	CP., 220pF
C416	08E25688S01	CP., 1000pF
C417	08E25813S01	CP., 68pF
C418	08E25815S01	CP., 0.01μF
C419	08E25693S01	CP., 10pF
or	08E25694S01	CP., 10pF
C420	08E25695S01	CP., 68pF
C421	08E25695S01	CP., 68pF
C422	08E25633S01	POLY., 0.047μF
C501	08E25692S01	CP., 180pF
E501	23E25644S01	ELY., 3.3μF / 50V
C502	08E25637S01	POLY., 0.15μF
E502	23E25639S01	ELY., 10μF / 16V
C503	08E25782S01	CER., 1000pF
E503	23E25639S01	ELY., 10μF / 16V

Symbol No.	Part No.	Description
C504	08E25636S01	POLY., 0.1μF
E504	23E25639S01	ELY., 10μF / 16V
C505	08E25688S01	CP., 1000pF
C506	08E25815S01	CP., 0.01μF
E506	23E25639S01	ELY., 10μF / 16V
C507	08E25636S01	POLY., 0.1μF
E507	23E25643S01	ELY., 220μF / 16V
C508	08E25626S01	POLY., 1500pF
E508	23E25638S01	ELY., 220μF / 10V
C509	08E25630S01	POLY., 6800pF
E509	23E25639S01	ELY., 10μF / 16V
C510	08E25630S01	POLY., 6800pF
E510	23E25642S01	ELY., 100μF / 16V
C511	08E25633S01	POLY., 0.047μF
E511	23E22001S01	ELY., 3300μF / 16V
C512	08E25633S01	POLY., 0.047μF
E512	23E22001S01	ELY., 3300μF / 16V
C513	08E25634S01	POLY., 0.056μF
E513	23E08302S01	ELY., 470μF / 35V
C514	08E25634S01	POLY., 0.056μF
E514	23E08302S01	ELY., 470μF / 35V
E515	23T95403W03	ELY., 6800μF / 35V
E516	23T95403W03	ELY., 6800μF / 35V
C517	08E25634S01	POLY., 0.056μF
E517	23E25780S01	ELY., 22μF / 50V
C518	08E25634S01	POLY., 0.056μF
E518	23E25780S01	ELY., 22μF / 50V
E519	23E25643S01	ELY., 220μF / 16V
E520	23E25643S01	ELY., 220μF / 16V
E523	23E25697S01	ELY., 330μF / 50V
E524	23E25697S01	ELY., 330μF / 50V
E525	23E25780S01	ELY., 22μF / 50V
E526	23E25780S01	ELY., 22μF / 50V
E527	23E25697S01	ELY., 330μF / 50V
E528	23E25697S01	ELY., 330μF / 50V
E529	23E25645S01	ELY., 10μF / 50V
E530	23E25645S01	ELY., 10μF / 50V
E531	23E25645S01	ELY., 10μF / 50V
E532	23E25645S01	ELY., 10μF / 50V
C599	23E25769S01	ELY., (B.P) 100μF / 10V
C601	08E25782S01	CER., 1000pF

Resistors

(All resistors are chip 1/10W±5% unless otherwise noted.)

R101	06E25784S01	100 ohm
R102	06E25794S01	27K ohm
R103	06E25787S01	750 ohm
R104	06E25788S01	2.2K ohm

Symbol No.	Part No.	Description
R105	06E25792S01	10K ohm
R106	06E25788S01	2.2K ohm
R107	06E25786S01	510 ohm
R108	06E25792S01	10K ohm
R109	06E25785S01	220 ohm
R110	06E25792S01	10K ohm
R111	06E25789S01	3.6K ohm
R112	06E25791S01	6.8K ohm
R113	06E25792S01	10K ohm
R114	06E25792S01	10K ohm
R115	06E25794S01	27K ohm
R116	06E25792S01	10K ohm
R117	06E25790S01	6.2K ohm
R118	06E25790S01	6.2K ohm
R119	06E25792S01	10K ohm
R120	06E25785S01	220 ohm
R121	06E25785S01	220 ohm
R122	06E25792S01	10K ohm
R123	06E25787S01	750 ohm
R124	06E25794S01	27K ohm
R125	06E25792S01	10K ohm
R126	06E25795S01	1M ohm
R127	06E25787S01	750 ohm
R128	06E25794S01	27K ohm
R129	06E25784S01	100 ohm
R130	06E25793S01	22K ohm
R131	06E25800S01	4.7K ohm
R132	06E25792S01	10K ohm
R133	06E25676S01	5.6K ohm
R134	06E25799S01	1K ohm
R135	06E25801S01	51K ohm
R136	06E25796S01	120 ohm
R137	06E25796S01	120 ohm
R138	06E25798S01	470 ohm
R139	06E25811S01	390 ohm
R140	06E25802S01	62K ohm
R141	06E25787S01	750 ohm
R142	06E25789S01	3.6K ohm
R144	06E25797S01	33 ohm
R145	06E25838S01	200 ohm
R148	06E25803S01	4.7 ohm
R149	06E25803S01	4.7 ohm
R150	06E25783S01	680 ohm
R155	06E25673S01	1K ohm
R156	06E22328S01	Cement, 0.1 ohm 5WX2
R157	06E25808S01	820 ohm
R158	06E25792S01	10K ohm
R159	06E25679S01	12K ohm
R160	06E25666S01	M.F., 10 ohm 1W

Symbol No.	Part No.	Description
R201	06E25784S01	100 ohm
R202	06E25794S01	27K ohm
R203	06E25787S01	750 ohm
R204	06E25788S01	2.2K ohm
R205	06E25792S01	10K ohm
R206	06E25788S01	2.2K ohm
R207	06E25786S01	510 ohm
R208	06E25792S01	10K ohm
R209	06E25785S01	220 ohm
R210	06E25792S01	10K ohm
R211	06E25789S01	3.6K ohm
R212	06E25791S01	6.8K ohm
R213	06E25792S01	10K ohm
R214	06E25792S01	10K ohm
R215	06E25794S01	27K ohm
R216	06E25792S01	10K ohm
R217	06E25790S01	6.2K ohm
R218	06E25790S01	6.2K ohm
R219	06E25792S01	10K ohm
R220	06E25785S01	220 ohm
R221	06E25785S01	220 ohm
R222	06E25792S01	10K ohm
R223	06E25792S01	10K ohm
R224	06E25794S01	27K ohm
R225	06E25792S01	10K ohm
R226	06E25795S01	1M ohm
R227	06E25787S01	750 ohm
R228	06E25794S01	27K ohm
R229	06E25784S01	100 ohm
R230	06E25793S01	22K ohm
R231	06E25800S01	4.7K ohm
R232	06E25792S01	10K ohm
R233	06E25676S01	5.6K ohm
R234	06E25799S01	1K ohm
R235	06E25801S01	51K ohm
R236	06E25796S01	120 ohm
R237	06E25796S01	120 ohm
R238	06E25798S01	470 ohm
R239	06E25811S01	390 ohm
R240	06E25802S01	62K ohm
R241	06E25787S01	750 ohm
R242	06E25789S01	3.6K ohm
R244	06E25797S01	33 ohm
R245	06E25838S01	200 ohm
R248	06E25803S01	4.7 ohm
R249	06E25803S01	4.7 ohm
R250	06E25783S01	680 ohm
R255	06E25673S01	1K ohm
R256	06E22328S01	Cement, 0.1 ohm 5WX2

Symbol No.	Part No.	Description
R257	06E25808S01	820 ohm
R258	06E25792S01	10K ohm
R259	06E25679S01	12K ohm
R260	06E25666S01	M.F., 10 ohm 1W
R301	06E25784S01	100 ohm
R302	06E25794S01	27K ohm
R303	06E25787S01	750 ohm
R304	06E25788S01	2.2K ohm
R305	06E25792S01	10K ohm
R306	06E25788S01	2.2K ohm
R307	06E25786S01	510 ohm
R308	06E25792S01	10K ohm
R309	06E25785S01	220 ohm
R310	06E25792S01	10K ohm
R311	06E25789S01	3.6K ohm
R312	06E25791S01	6.8K ohm
R313	06E25792S01	10K ohm
R314	06E25792S01	10K ohm
R315	06E25794S01	27K ohm
R316	06E25792S01	10K ohm
R317	06E25790S01	6.2K ohm
R318	06E25790S01	6.2K ohm
R319	06E25792S01	10K ohm
R320	06E25785S01	220 ohm
R321	06E25785S01	220 ohm
R322	06E25792S01	10K ohm
R323	06E25787S01	750 ohm
R324	06E25794S01	27K ohm
R325	06E25792S01	10K ohm
R331	06E25800S01	4.7K ohm
R332	06E25792S01	10K ohm
R333	06E25676S01	5.6K ohm
R334	06E25799S01	1K ohm
R335	06E25801S01	51K ohm
R336	06E25796S01	120 ohm
R337	06E25796S01	120 ohm
R338	06E25798S01	470 ohm
R339	06E25811S01	390 ohm
R340	06E25802S01	62K ohm
R341	06E25787S01	750 ohm
R342	06E25789S01	3.6K ohm
R344	06E25797S01	33 ohm
R345	06E25838S01	200 ohm
R348	06E25803S01	4.7 ohm
R349	06E25803S01	4.7 ohm
R350	06E25783S01	680 ohm
R355	06E25673S01	1K ohm
R356	06E22328S01	Cement, 0.1 ohm 5WX2
R357	06E25808S01	820 ohm

Symbol No.	Part No.	Description
R358	06E25792S01	10K ohm
R359	06E25679S01	12K ohm
R360	06E25666S01	M.F., 10 ohm 1W
R401	06E25784S01	100 ohm
R402	06E25794S01	27K ohm
R403	06E25787S01	750 ohm
R404	06E25788S01	2.2K ohm
R405	06E25792S01	10K ohm
R406	06E25788S01	2.2K ohm
R407	06E25786S01	510 ohm
R408	06E25792S01	10K ohm
R409	06E25785S01	220 ohm
R410	06E25792S01	10K ohm
R411	06E25789S01	3.6K ohm
R412	06E25791S01	6.8K ohm
R413	06E25792S01	10K ohm
R414	06E25792S01	10K ohm
R415	06E25794S01	27K ohm
R416	06E25792S01	10K ohm
R417	06E25790S01	6.2K ohm
R418	06E25790S01	6.2K ohm
R419	06E25792S01	10K ohm
R420	06E25785S01	220 ohm
R421	06E25785S01	220 ohm
R422	06E25792S01	10K ohm
R423	06E25792S01	10K ohm
R424	06E25794S01	27K ohm
R425	06E25792S01	10K ohm
R431	06E25800S01	4.7K ohm
R432	06E25792S01	10K ohm
R433	06E25676S01	5.6K ohm
R434	06E25799S01	1K ohm
R435	06E25801S01	51K ohm
R436	06E25796S01	120 ohm
R437	06E25796S01	120 ohm
R438	06E25798S01	470 ohm
R439	06E25811S01	390 ohm
R440	06E25802S01	62K ohm
R441	06E25787S01	750 ohm
R442	06E25789S01	3.6K ohm
R444	06E25797S01	33 ohm
R445	06E25838S01	200 ohm
R448	06E25803S01	4.7 ohm
R449	06E25803S01	4.7 ohm
R450	06E25783S01	680 ohm
R455	06E25673S01	1K ohm
R456	06E22328S01	Cement, 0.1 ohm 5WX2
R457	06E25808S01	820 ohm
R458	06E25792S01	10K ohm

Symbol No.	Part No.	Description
R459	06E25679S01	12K ohm
R460	06E25666S01	M.F., 10 ohm 1W
R504	06E25809S01	150K ohm
R507	06E25804S01	7.5 ohm
R508	06E25679S01	12K ohm
R509	06E25684S01	100K ohm
R510	06E25800S01	4.7K ohm
R512	06E25806S01	2K ohm
R513	06E25684S01	100K ohm
R514	06E25806S01	2K ohm
R515	06E25795S01	1M ohm
R516	06E25810S01	680K ohm
R517	06E25673S01	1K ohm
R518	06E25673S01	1K ohm
R519	06E25673S01	1K ohm
R520	06E25673S01	1K ohm
R521	06E25807S01	3.3K ohm
R522	06E25798S01	470 ohm
R523	06E25676S01	5.6K ohm
R524	06E25681S01	20K ohm
R525	06E25681S01	20K ohm
R526	06E25805S01	150 ohm
R527	06E25793S01	22K ohm
R528	06E25792S01	10K ohm
R529	06E25792S01	10K ohm
R530	06E25686S01	510K ohm
R531	06E25685S01	240K ohm
R532	06E25786S01	510 ohm
R534	06E25800S01	4.7K ohm
R536	06E25678S01	11K ohm
R537	06E25674S01	2.4K ohm
R538	06E25684S01	100K ohm
R539	06E25802S01	62K ohm
R540	06E25792S01	10K ohm
R541	06E25680S01	18K ohm
R542	06E25667S01	M.F., 110 ohm 1W
R543	06E25667S01	M.F., 110 ohm 1W
R556	06E25666S01	M.F., 10 ohm 1W
R557	06E25666S01	M.F., 10 ohm 1W
R586	06E25668S01	M.F., 150 ohm 1W
R601	06E25795S01	1M ohm
R602	06E25795S01	1M ohm
VR104	18E25664S01	Variable, 1.5K ohm
VR204	18E25664S01	Variable, 1.5K ohm
VR304	18E25664S01	Variable, 1.5K ohm
VR404	18E25664S01	Variable, 1.5K ohm
VR501	18E25665S01	Variable, 10K ohm

Symbol No.	Part No.	Description
Volume (1) P.C.Board		
Resistors		
VR101	18E25743S01	Volume, 50K ohmX2 (GAIN)
VR102	18E25761S01	Volume, 50K ohmX2/20K ohmX2 (HP)
VR103	18E25746S01	Volume, 50K ohmX4 (LP)
Volume (2) P.C.Board		
Resistors		
VR301	18E25743S01	Volume, 50K ohmX2 (GAIN)
VR302	18E25761S01	Volume, 50K ohmX2/20K ohmX2 (HP)
VR303	18E25746S01	Volume, 50K ohmX4 (LP)
LED P.C.Board		
LED		
LD501	48E23780S01	SEL2510C (GRN)
Miscellaneous		
ET801	01E22007S01	POWER SUPPLY Terminal
ET802	09E25704S01	SPEAKER OUTPUT Terminal
F501	65E25552S01	Fuse, Auto 30A (For Battery Line)
JK801	09E25484S01	RCA Connector (INPUT / PRE OUT)

Cabinet Assembly Parts List

Symbol No.	Index	Part No.	Description
○ 5	5-E	15E25610S01	Badge (A)
△ 5	5-E	15E25611S01	Badge (B)
□ 5	5-E	15E25610S01	Badge (A)
7	4-F	15E25478S01	Cover, LED
9	5-D	15E25613S01	Badge, Window
10	3-C	15E21973S01	Cover, Switch
11	3-E	43E21451S01	Support, P.C.Board
14	2-E	45E25776S01	Bas Bar
15	2-E	45E23803S01	Bas Bar, FET
17	3-E	45E22372S01	Bas Bar JD
22		03E06492S02	Screw, Bind (M3X5)
23		03E08429S02	Screw, Bind (M3X6)
24		03E06967S01	Screw, Bind (M3X10)
25		03E23371S01	Screw, Pan (M3X8)
27		03E22346S01	Screw, W/Washer (M3X8.5)
28		03E22347S01	Screw, Special (M3X5)
29	5-E	03E25622S01	Screw, Hex. Socket (M2.6X10)
31		09E21408S01	Lead Pin
35	3-C	26E25705S01	Sheet, MICA
36		43E25706S01	Bushing U

NOTE:No parts number on parts list are not supplied.

Symbol No.	Index	Part No.	Description

NOTE : ○: For MRV-F305 (North American) Model Only, △: For MRV-F305 (General Foreign) Model Only, □: For MRV-F305 (Japanese) Model Only, Others : Common.
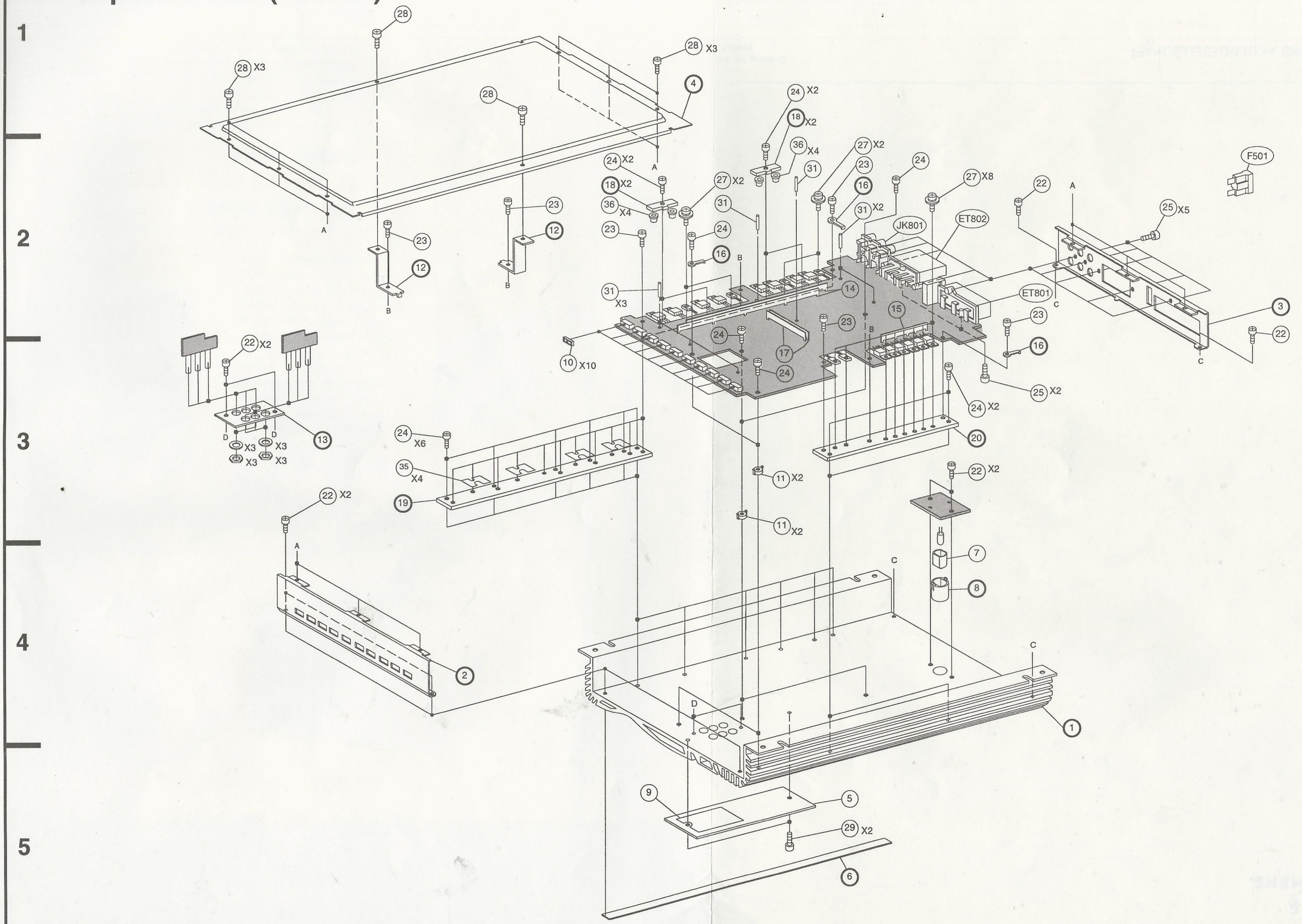
Exploded View (Cabinet)