ALPINE

SERVICE MANUAL

MONO POWER AMPLIFIER

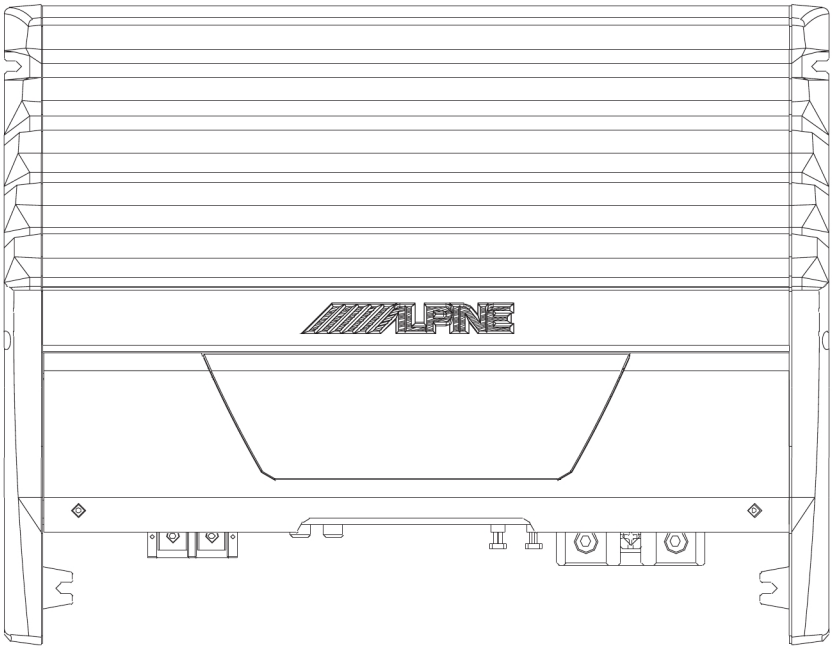

TO ALPINE Home Page

2 / 04-A
68E36267S01

MRD-M501

<Cautions for Safe Repair Work>

The following cautions will prevent accidents in the workplace and will ensure safe products.
*The symbols indicate caution is needed to prevent injuries and damage to property.
The symbols and their meanings follow.

⚠ **Warning**	If you ignore this symbol and handle the product incorrectly or unsafely, serious injury or death may result.
⚠ **Caution**	If you ignore this symbol and handle the product incorrectly or unsafely, injury or only material damage may result.

*The following symbols indicate two levels of cautions.

⚠	When you see this symbol, you have to be very careful.
❗	When you see this symbol, you have to follow the instructions there.

⚠ Warning

⚠ **Do not look squarely into the laser light coming from the pickup.** You may loose you sight.	❗ **Fuse Caution** Always use a designated fuse. Use of an incorrect fuse may result in a fire.

⚠ Caution

⚠ **Do not allow wiring to be caught in the screw/chassis.** If wiring is caught in the screw/chassis, it may cause a short circuit, resulting in a fire.	❗ **Battery Caution** Use the designated battery. Confirm the correct polarity and seat of the battery. An incorrect battery or an improperly connected or seated battery may result in a fire.
⚠ **High Temperature Caution** Touching the heat sink may cause severe burns.	❗ **Designated Parts Caution** Look up the part list and ensure that only designated parts are used to prevent problems or accidents.
⚠ **Reverse Power Supply Connections or Misconnections Caution** Reverse power supply connections or misconnections may cause ignition problems and smoke may result.	❗ **Wiring Caution** Ensure that the wiring is correct when rewiring to prevent problems with ignition/breakdown.
⚠ **Soldering Caution** Hot solder from solder splash may cause severe burns.	❗ **Wear Gloves** Wear gloves to prevent electrical shocks or injury from the end face of the metal.

Contents

NOTE : Due to continuing product improvement, specifications and designs are subject to change without notice.

Packing Assembly Parts List

Symbol No.	Part No.	Description
101-1	03E36238S01	SCR(M4X20 TPG1,BLK)
101-2	03E36208S01	WRENCH BOLT(M3X12(WHT))
101-3	15E36257S01	COVER TERMINAL(B)
101-4	47E22594S01	WRENCH (2.5mmX2.9mm)
101-5	01E28659S01	WRENCH (2mmX2.3mm)

Symbol No.	Part No.	Description
101-6	47E35195S01	WRENCH (4mmX4.6mm)
#1 102-1	68P04190K32	OWNERS MANUAL(AE)
$1 102-1	68P04190K18	OWNERS MANUAL(GE)
%1 102-1	68-00346Z15	OWNERS MANUAL(EU)
$1 102-2	68P04190K19	OWNERS MANUAL(I.G.S)

NOTE : #1 : For North American Model Only, $1 : For European Model Only,
&1 : For Chinese Model Only, Others : Common.

Packing Method View

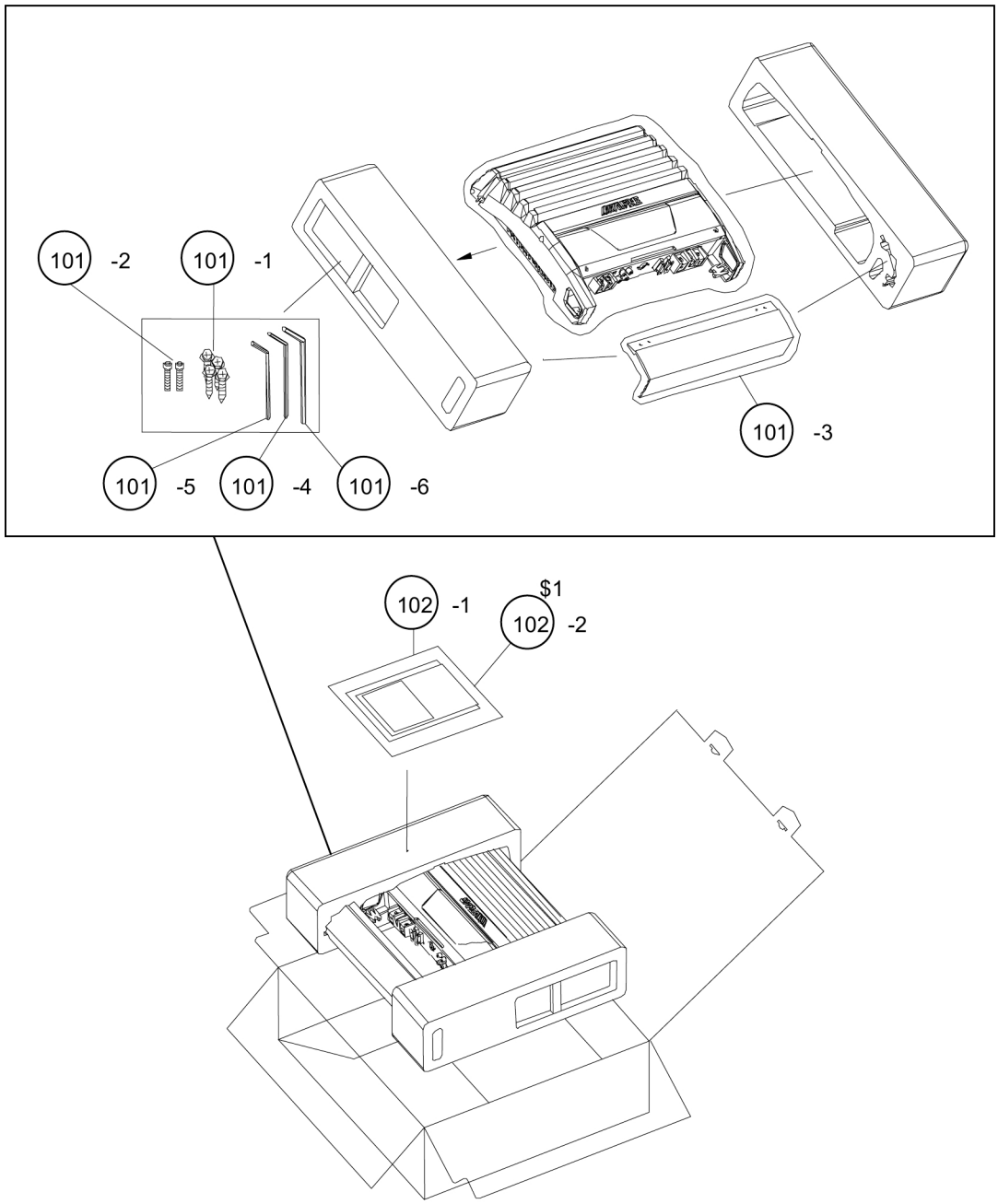

NOTE : $1 : For European Model Only, Others : Common.

TO CONTENTS

Specifications

Power Output (20Hz, 100Hz)	4ohm, 1% T.H.D., 14.4V : 260W
	2ohm, 1% T.H.D., 14.4V : 500W
T.H.D. (100Hz)	200W/ch/4ohm, 14.4V : 1%
S/N Ratio (Ref. Output 275W/4ohm, Input short, Gain Position 0dB)	81dB
Residual Noise (Input Short, Gain Position 0dB)	30mV
Frequency Response (Ref. 100Hz, 0dB)	20Hz : -0.5±2dB
	350Hz : -6±2dB
Input Sensitivity (Power Gain at 300W/4ohm Output)	RCA Input Level : 0.5-8V, Gain Position -6dB : 1V±2dB
	RCA Input Level : 0.1-2V, Gain Position -18dB : 0.9V±2dB
Remote on Voltage (1W Output)	6.5±1V
Current Drain	No Signal : 1.5A
	9% T.H.D., 2ohm Load : 80A
	Remote Current Drain : 0.26±0.1mA
	Back-Up Current Drain : 1.2mA
Pre-Out Level (at 1V Input)	1V±2dB
Fuse Requirement	30A(Peak) x 2 (For Battery Line)
Power Source	DC14.4V (11~16V)
Dimensions (W x H x D)	348 x 65 x 270mm
Weight	4.2kg

NOTE : Due to Continuing product improvement, specifications and designs are subject to change without notice.

TO CONTENTS

Block Diagram

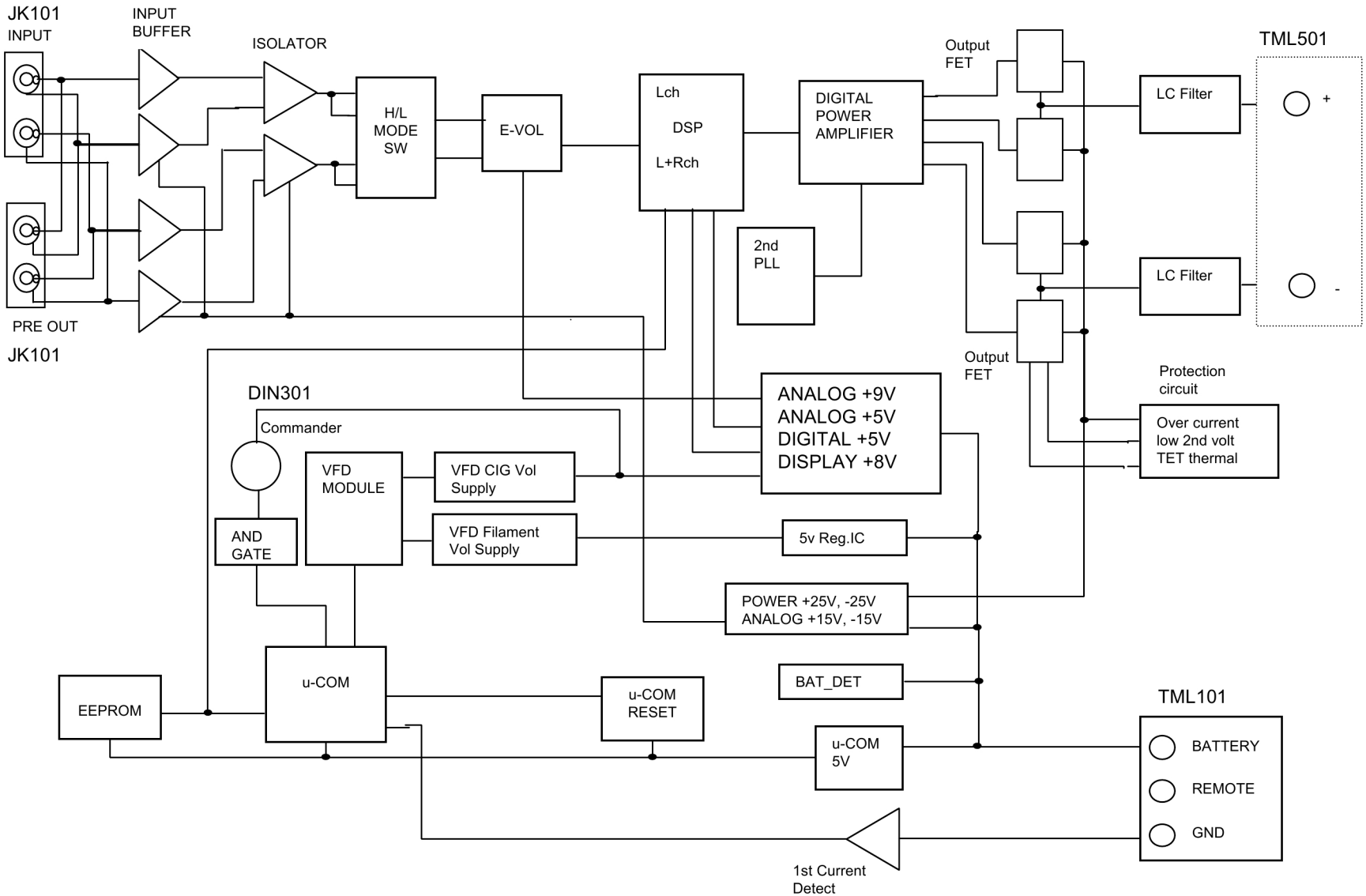

TO CONTENTS

Parts Layout on P.W.Board and Wiring Diagram (1/2)

MAIN P.W.Board (Component Side View)

MRD-M501

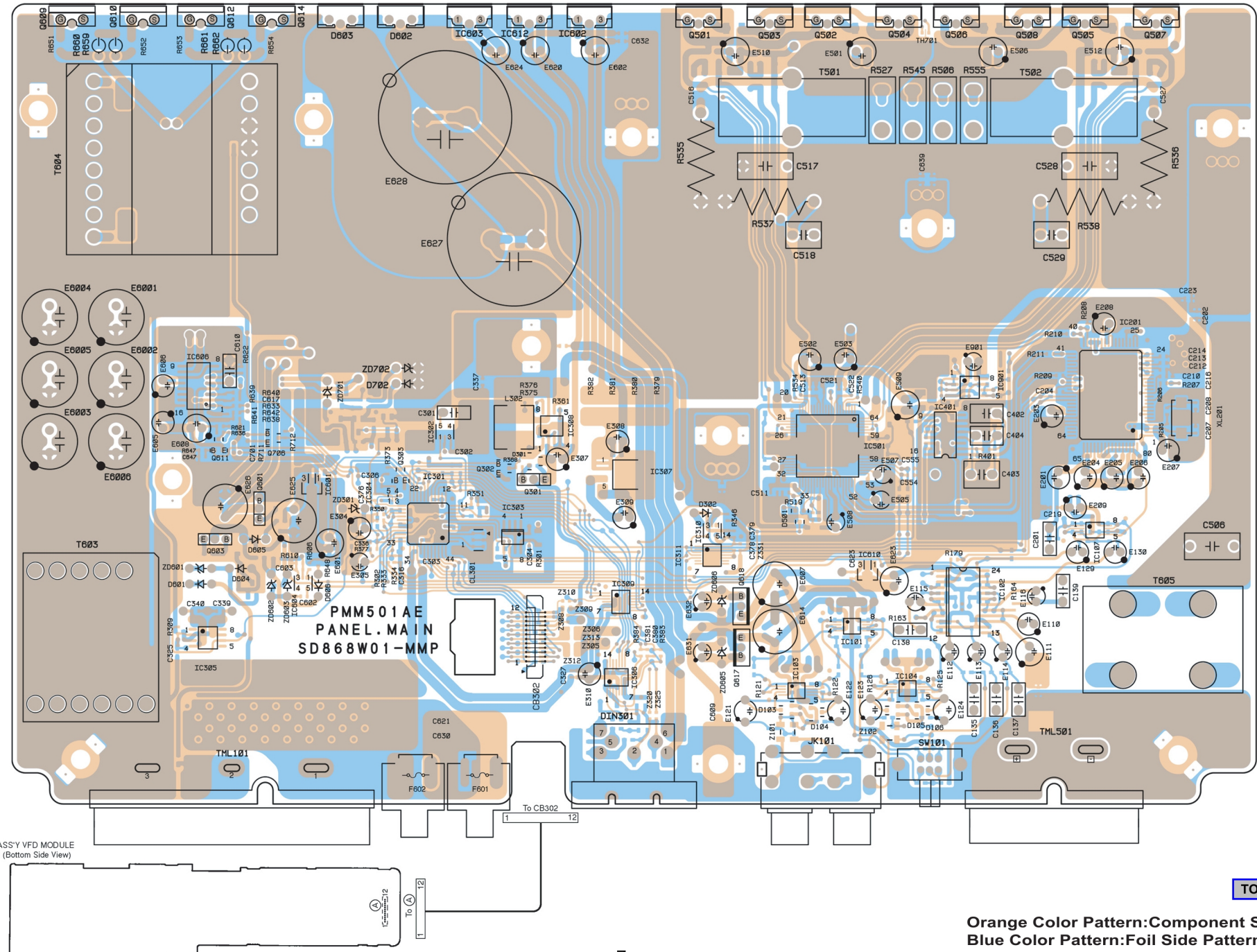

TO CONTENTS

Orange Color Pattern:Component Side Pattern
Blue Color Pattern:Foil Side Pattern

Parts Layout on P.W.Board and Wiring Diagram (2/2)

MAIN P.W.Board (Foil Side View)

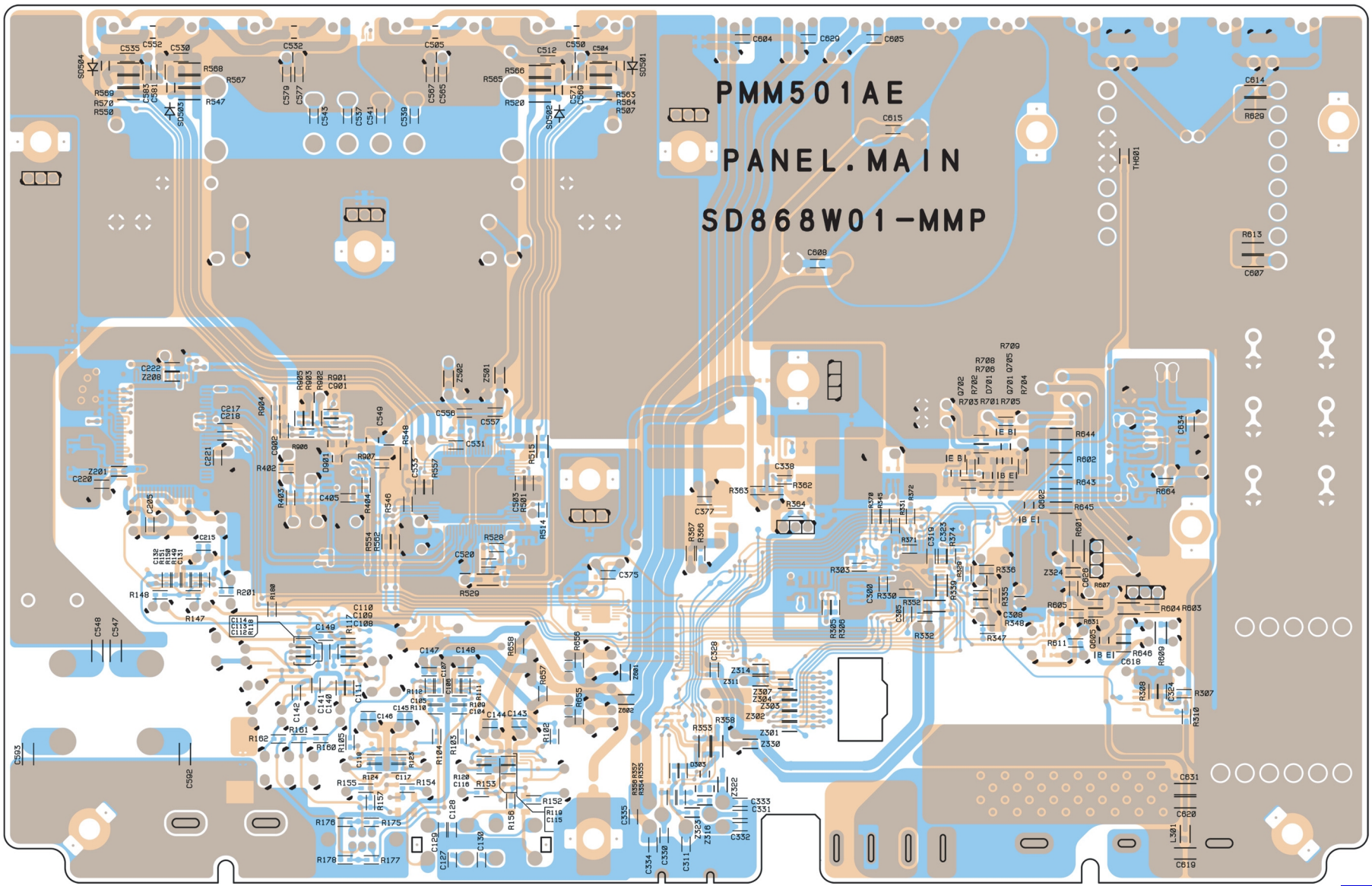

TO CONTENTS

Orange Color Pattern:Component Side Pattern
Blue Color Pattern:Foil Side Pattern

Schematic Diagram(1/2)

MRD-M501

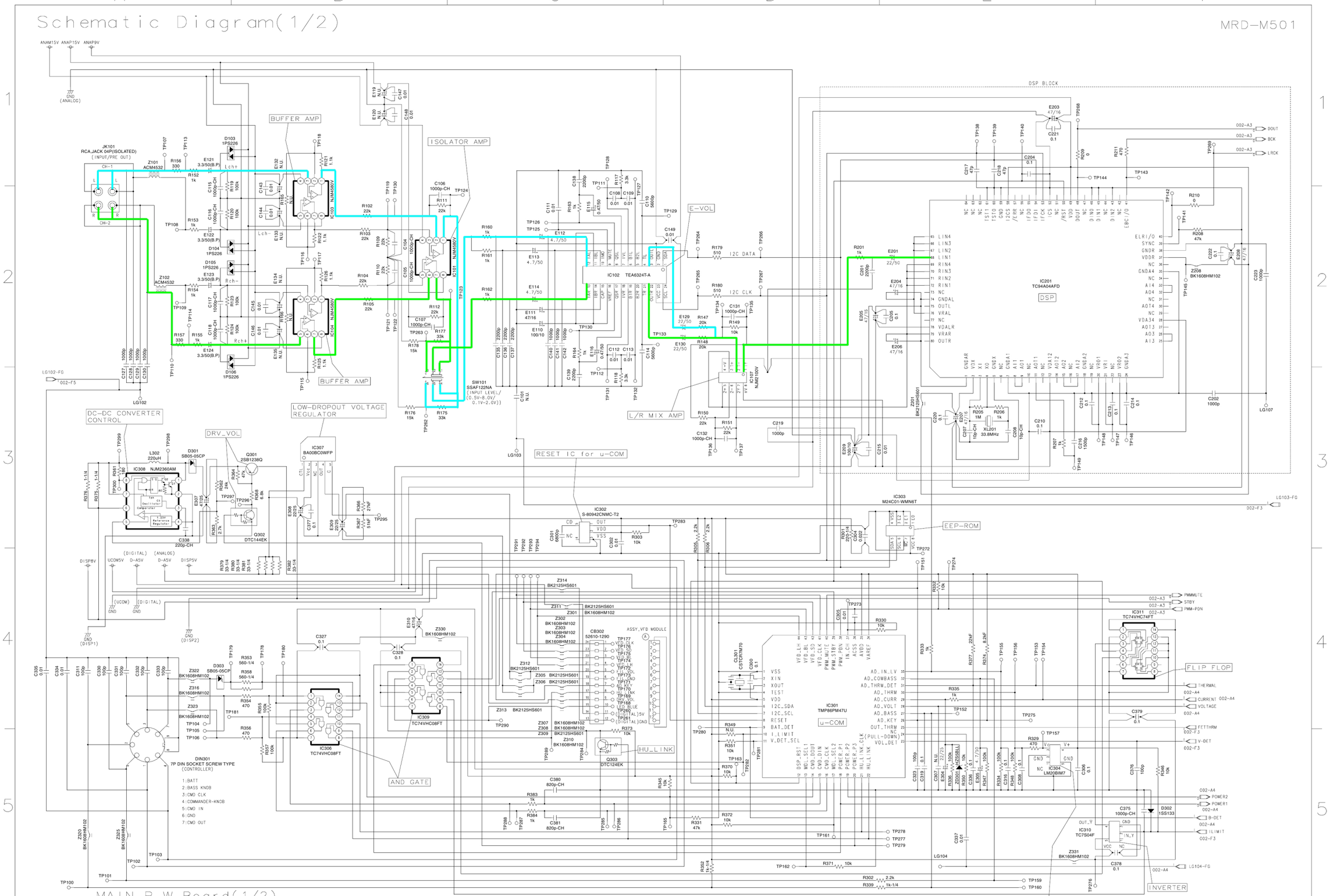

MAIN P.W.Board(1/2)

NOTE : N.U. is Not Used Parts.

TO P. W. BOARD
TO PARTS LIST
TO CONTENTS

Schematic Diagram(2/2)

MRD-M501

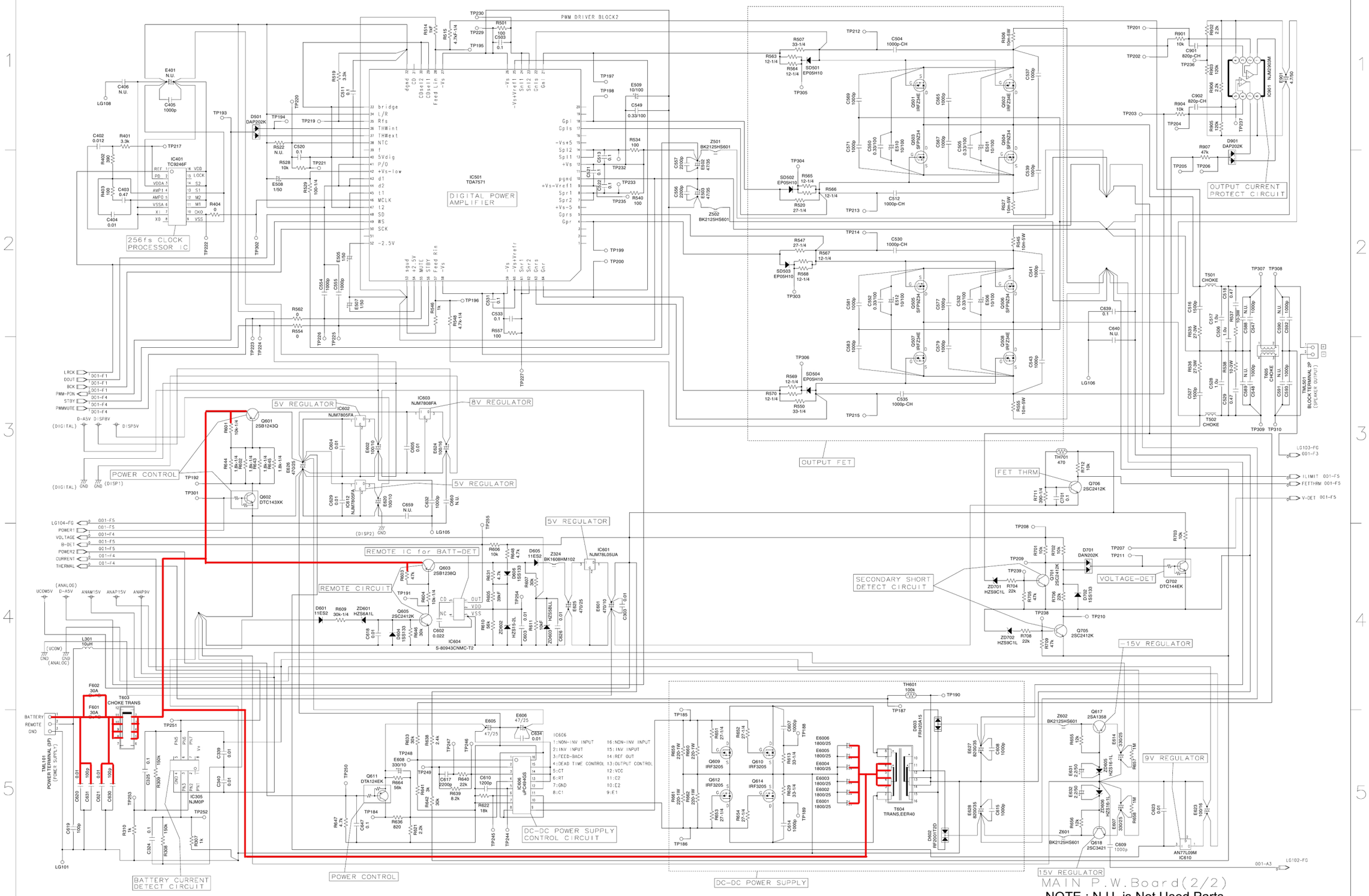

NOTE : N.U. is Not Used Parts.

TO P. W. BOARD
TO PARTS LIST
TO CONTENTS

Terminal Voltage of IC/TR

IC101	
1	4.1m
2	4.8m
3	9.9m
4	-15.153
5	9.98m
6	9.8m
7	4.76m
8	15.204

IC102					
1	5.075	9	8.913	17	4.506
2	4.9m	10	4.49	18	4.445
3	4.502	11	4.503	19	4.481
4	4.498	12	4.49	20	4.5
5	4.503	13	4.49	21	4.495
6	4.485	14	4.503	22	4.499
7	4.444	15	4.889	23	8.975
8	4.504	16	4.503	24	5.077

IC103	
1	13.46m
2	13.1m
3	0
4	-15.129
5	0
6	13.51m
7	13.44m
8	15.186

IC104	
1	13.72m
2	13.77m
3	0
4	-15.061
5	0
6	13.55m
7	13.43m
8	15.146

IC107	
1	2.528
2	2.529
3	2.528
4	4.84m
5	2.528
6	2.529
7	2.528
8	5.067

IC201									
1	4.87m	17	819.8	33	800.7m	49	5.065	65	2.521
2	5.066	18	3.46	34	NC	50	5.073	66	2.521
3	2.385	19	NC	35	3.47m	51	NC	67	2.521
4	3.365	20	2.53	36	NC	52	2.86m	68	2.521
5	2.87m	21	2.531	37	5.065	53	5.077	69	2.518
6	NC	22	NC	38	2.86m	54	5.077	70	2.527
7	3.45m	23	2.399	39	24.5	55	19.21m	71	2.527
8	814.8m	24	3.46m	40	1.777	56	NC	72	2.527
9	814.8m	25	797m	41	2.558	57	18.7m	73	NC
10	NC	26	797m	42	NC	58	5.065	74	3.44m
11	682.2m	27	618.8m	43	2.86m	59	2.87m	75	NC
12	NC	28	5.066	44	NC	60	2.87m	76	2.521
13	3.46m	29	NC	45	2.84m	61	2.87m	77	NC
14	690.9m	30	628.4m	46	2.8m	62	NC	78	5.066
15	819.7m	31	NC	47	NC	63	NC	79	2.527
16	NC	32	800.7m	48	1.987	64	NC	80	2.525

IC301							
1	4.07m	12	5.073	23	5.073	34	5.078
2	2.147	13	4.01m	24	4.9m	35	5.078
3	2.341	14	4.202	25	14.4m	36	4.04m
4	4.08m	15	4.19m	26	5.074	37	4.7m
5	5.077	16	4.18m	27	5.077	38	5.074
6	5.076	17	5.073	28	3.586	39	5.076
7	5.076	18	4.997	29	64.66m	40	5.076
8	5.073	19	4.989	30	1.488	41	5.5m
9	5.071	20	5.064	31	5.068	42	6.6m
10	5.077	21	4.9m	32	6.5m	43	4.55m
11	4.74m	22	4.9m	33	2.502	44	4.6m

TO SCHEMATIC TO CONTENTS

IC302	
1	5.074
2	5.078
3	4.06m
4	NC
5	4.05m

IC303			
1	4.1m	5	5.077
2	4.1m	6	5.077
3	4.1m	7	4.1m
4	4.1m	8	5.078

IC304	
1	NC
2	3.98m
3	1.5
4	5.078
5	3.98

IC305	
1	15.154
2	3.62m
3	3.69m
4	-15.209
5	4.1m
6	56m
7	15.255
8	15.177

IC306			
1	5m	8	4.22m
2	5.077	9	4.9m
3	4.17m	10	4.9m
4	3.3m	11	5.077
5	5.077	12	5.077
6	4.17	13	4.202
7	4.17	14	5.077

IC307	
1	2.925
2	2.925
3	4.3m
4	1.907
5	1.251

IC308	
1	8.056
2	4.16m
3	406.5m
4	4.16m
5	1.324
6	8.094
7	8.078
8	4.661

IC309			
1	4.997	8	4.16m
2	5.073	9	4.16m
3	5.049	10	4.17m
	4.17m	11	5.077
5	4.17m	12	5.075
6	4.17m	13	5.078
7	4.17m	14	5.077

IC310	
1	NC
2	5.073
3	4.26m
4	4.26m
5	5.078

IC311			
1	5.078	8	4.17m
2	4.25m	9	4.17m
3	4.26m	10	4.17m
4	5.073	11	5.077
5	4.17m	12	4.28m
6	4.17m	13	4.26m
7	4.17m	14	5.078

IC401			
1	2.538	9	4.33m
2	2.679	10	2.357
3	5.067	11	5.067
4	2.679	12	5.067
5	1.578	13	4.33m
6	4.34m	14	5.067
7	4.33m	15	5.045
8	5.064	16	5.067

IC501									
1	NC	14	28.41	27	-28.35	40	4.889	53	3.86m
2	NC	15	NC	28	-2.77m	41	4.26m	54	2.447
3	NC	16	NC	29	4.889	42	26.51	55	5.077
4	24.32	17	24.82	30	4.889	43	4.27m	56	5.078
5	24.81	18	24.33	31	NC	44	4.27m	57	-0.2m
6	NC	19	NC	32	4.3m	45	4.889	58	-28.36
7	28.41	20	NC	33	4.889	46	2.361	59	-28.36
8	28.41	21	-24.01	34	4.28m	47	4.889	60	-18.464
9	18.665	22	-24.46	35	2.642	48	1.65	61	-28.34
10	3.93m	23	-28.34	36	4.943	49	2.538	62	-28.34
11	NC	24	-28.34	37	4.949	50	2.532	63	-24.5
12	28.42	25	-18.462	38	4.864	51	NC	64	-24.03
13	28.41	26	-28.35	39	NC	52	-2.406		

TO SCHEMATIC TO CONTENTS

IC601	
1	5.078
2	3.92m
3	13.652

IC602	
1	14.318
2	4.24m
3	5.072

IC603	
1	14.326
2	4.12m
3	8.093

IC604	
1	5.074
2	8.018
3	3.89m
4	NC
5	3.88m

IC606			
1	2.597	9	252.7m
2	2.594	10	247.1m
3	4.025	11	14.328
4	198.2m	12	14.327
5	1.693	13	5.039
6	3.752	14	5.039
7	3.87m	15	5.039
8	14.328	16	3.85m

IC610	
1	14.326
2	4.62m
3	8.972

IC612	
1	14.313
2	4.25m
3	5.078

IC901			
1	5.074	5	-27.73
2	-28.33	6	-28.83
3	-27.73	7	5.074
4	-28.36	8	3.85m

	G	D	S		G	D	S
Q501	-24.44	-225.4m	-28.35	Q507	-24.48	-131m	-28.36
Q502	-24.45	-222.2m	-28.35	Q508	-24.48	-131m	-28.36
Q503	24.83	-132.8m	28.44	Q609	245.1m	14.394	4m
Q504	24.82	-131.5m	28.44	Q610	250m	14.394	4m
Q505	24.82	-223.4m	28.44	Q612	242m	14.394	4m
Q506	24.82	-223.6m	28.44	Q614	243.4m	14.394	4m

	E	B	C		E	B	C
Q301	12.532	12.415	12.441	Q611	4.988	5.039	199.3m
Q302	4.1m	5.064	50.59m	Q617	-15.138	-15.732	-28.33
Q303	4.93m	4.03m	5.074	Q618	15.189	15.813	28.44
Q601	14.41	462.8m	14.397	Q701	3.84m	11.68m	703.5m
Q602	3.95m	4.996	86.33m	Q702	3.84m	28.72m	3.804
Q603	14.41	682m	14.349	Q705	-27.63	-28.33	-28.32
Q605	30m	3.89	682m	Q706	3.94m	776m	14.3m

[Measuring Conditions]

1.Power Supply Voltage : DC14.4V
2.Measuring Meter : Digital Multi Meter
3.Measuring Point Reference : Between GND
4.Measuring Condition : No Signal Input

TO SCHEMATIC TO CONTENTS

Description of IC Terminal

TMP86PM47U : IC301

No.	Symbol	I/O	Terminal Description
1	VSS	I	GND connect terminal of A/D converter.
2	XIN	I	Crystal OSC connect terminal.
3	XOUT	O	
4	TEST	I	TEST terminal.
5	VDD	I	Power supply terminal. (4.5 to 5.5V)
6	I2C_SDA	O	I2C-SDA output terminal.
7	I2C_SCL	O	I2C-SCL output terminal.
8	RESET	I	RESET terminal.
9	BAT_DET	I	BAT-DET terminal.
10	I_LIMIT	I	I_LIMIT input terminal.
11	V_DET_ SEL	O	VOLT-DET circuit ON/OFF terminal.
12	DSP_RST	O	DSP-RESET output terminal.
13	MDL_SEL1	I	Model distinction input terminal.
14	CMD_DOUT	O	Outer commander data output terminal.
15	CMD_DIN	I	Outer commander data input terminal.
16	CMD_CLK	I	Outer commander clock terminal.
17	MDL_SEL2	I	Model distinction input terminal.
18	POWER_P1	O	Power supply circuit control signal output terminal.
19	POWER_P2		
20	POWER_P3		
21	HU_LINK_CLK	O	HU LINK indicator clock output terminal.
22	HU_LINK	O	HU LINK indicator output terminal.
23	VOLT_DET	I	VOLT-DET terminal.
24	NC(PULL-DOWN)	-	Pull-down connect terminal.
25	OUT_THRM	I	Output Thermal detect1
26	AD_KEY	I	KEY level input terminal.
27	AD_BASS	I	Gain level input terminal. (Bass Knob)
28	AD_VOLT	I	Voltage signal input terminal.
29	AD_CURR	I	Current signal input terminal.
30	AD_THRM	I	Temperature signal input terminal.
31	AD_THRM_DET	I	Temperature detect input terminal.
32	AD_COMBASS	O	Gain level input terminal. (Commander)
33	AD_IN_LV	I	Input level signal input terminal.
34	VAREF	I	Analog standard voltage terminal.
35	AVDD	-	Analog power supply terminal of A/D converter.
36	AVSS	-	GND connect terminal of A/D converter.
37	IN_CH	O	PWM-1/1+2 select output terminal.
38	PWM_PDN	I	PWM-PDN input terminal.
39	PWM_STBY	O	PWM-STAND-BY output terminal.
40	PWM_MUTE	O	PWM-MUTE output terminal.
41	VFD_CLK	O	VFD driver synchronous clock output terminal.
42	VFD_SD	O	VFD driver transmission data output terminal.
43	VFD_BL	O	VFD driver blank output output terminal.
44	VFD_LH	O	VFD driver latch & hold output terminal.

TO SCHEMATIC TO CONTENTS

Exploded View (Cabinet)

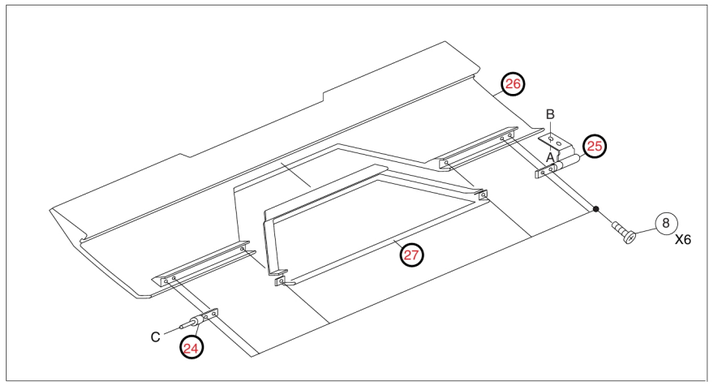

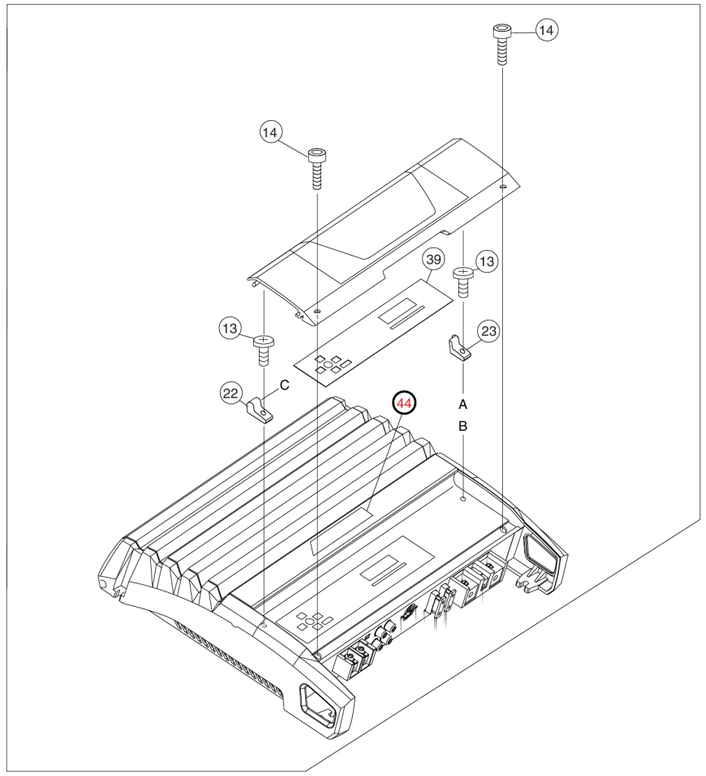

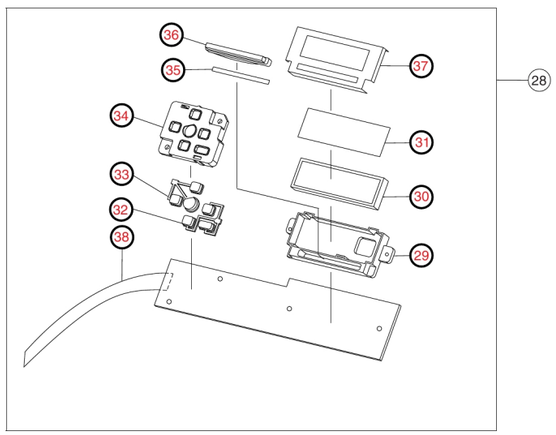

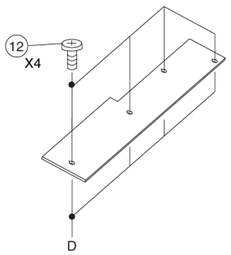

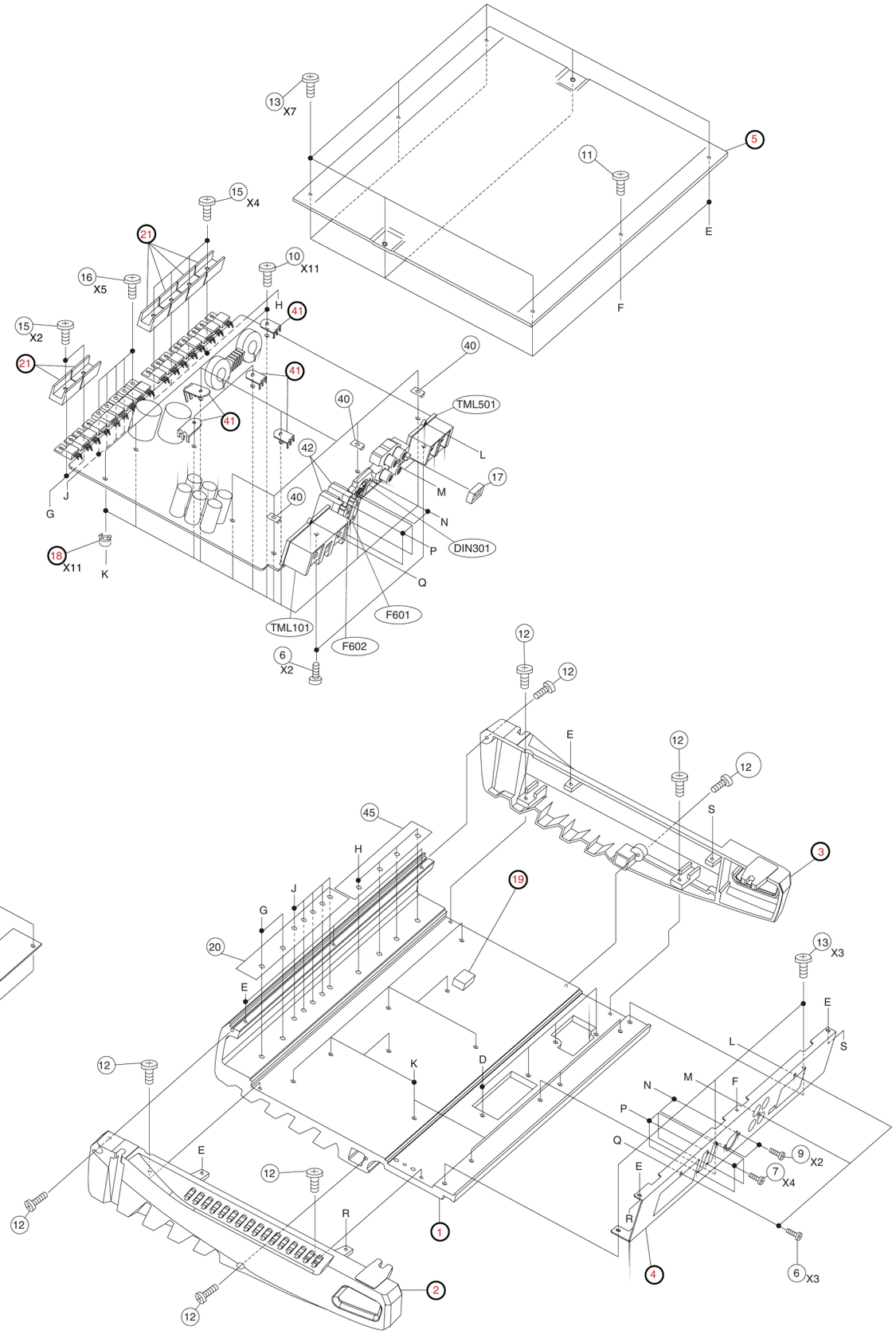

TO PARTS LIST

TO CONTENTS