Solid-State Stereo Tape Recorder

MODEL MR-915

SERVICE MANUAL

SANYO ELECTRIC CO., LTD.

INTERNATIONAL DIVISION: SANYO ELECTRIC TRADING CO., LTD.
OSAKA, JAPAN

SPECIFICATIONS

Recording system ·····AC bias 4 track
Erasing system ·····AC erase 4 track
Tape speeds ·····7-1/2 ips (19 cm/sec)
3-3/4 ips (9.5 cm/sec)
1-7/8 ips (4.8 cm/sec)
Wow & flutter·····7-1/2 ips: 0.2% RMS
3-3/4 ips: 0.3% RMS
1-7/8 ips: 0.4% RMS
Recording time·····64 min at 7-1/2 ips (Stereo 1,200 ft. tape)
128 min at 3-3/4 ips (〃)
256 min at 1-7/8 ips (〃)
Forward & rewind time·····Up to 3 min. (7″ 35μ tape)
Transistors, diodes, etc.·····2SB400×2 1st audio amplifier
2SB303×4 Audio amplifier
2SB187×2 Audio amplifier
2SB405×4 Power amplifier
2SB22×2 AC bias oscillator
1S188×2 For level meter
SDT-02×4 Temperature compensator
DS-1P×2 For AC rectifier
Level indication ·····VU meter×2
Output power ·····Music power 3W×2
Undistorted 1.5W×2
Frequency response ·····7-1/2 ips 50···12,000 Hz
3-3/4 ips 50··· 7,000 Hz
1-7/8 ips 50··· 3,000 Hz

Signal-to-noise ratio ·····Better than 40 db
Erase rate ·····65 db
Crosstalk ·····65 db (track to track)
45 db (channel to channel)
Terminals ·····Microphone×2 50K ohms
AUX input×2 100K ohms
Ext. SP×2 8 ohms
Headphone×1 10K
Line out×2 1K ohms
Monitor system ·····Headphone or speaker
Microphones·····Two dynamic microphone
Speakers·····Two 6″×4″ permanent dynamic speakers
Voice coil impedance 8 ohms
Power source ·····AC 100, 117, 125, 220, 240V, 50/60 Hz
Dimensions ·····14-3/8″(W)×10-3/8″(D)×10-15/16″(H)
(370×264×278 mm)
Weight·····29.8 lbs (13.5 kg)
Accessories ·····Dynamic microphone with stand×2
Patch cord×2
Splicing tape×1
1,200ft tape reel×1
7″ empty reel×1
Reel stopper×2

DISASSEMBLY

To disassembly:

Step 1. Remove screws (four) fixing Chassis to rear of cabinet.
Step 2. Remove screws (two) fixing Chassis to back of cabinet.
Step 3. Pull off Control Knob (remove the set screw).
Step 4. Remove Tape speed selecter knob.
Step 5. Remove Head Housing.
Step 6. Remove Volume and Tone control knobs.
Step 7. Remove screws (four) fixing panel, and remove panel.

To Reassemble:

Reverse disassembly sequence.

HEAD ADJUSTMENTS

Relative Position of Heads and Tape (refer to fig. 4)

Thread the recorder with tape and set in Playback mode. Pull back the tape pads and adjust the relative position of the heads and tape (see fig. 4) by turning the adjustment screws for each head. The erass head does not require precise azimuth positioning.

Record/Playback Head

Connect a VTVM to one speaker jack and play a 4-track standard alignment tape (10,000 Hz). Turn the adjustment screws until maximum meter reading is obtained. Check the other channel for a similar meter reading and readjust the first channel slightly if necessary to obtain equal output.

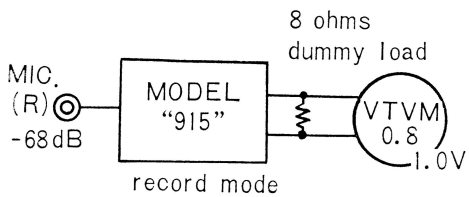

Fig. 5 (a)

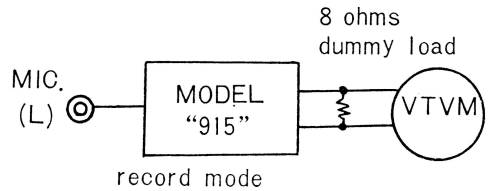

Fig. 5 (b)

Connect as shown in Fig. 5 (a). Fed in signal of optimum recording level from Signal Generator (SG) through the Attenuator to Right channel MIC. input jack. optimum recording level of this set is −68 dB.

Read the scale of VTVM which connected across the dummy load. It expected to indicate the value from 0.8V to 1.0V.

Connect as shown in Fig. 5 (b). As same as described before fed in signal (−68dB) from SG to Left channel MIC. input jack. Alignment SVR-1 as VTVM indicates same voltage (value) as before (Right channel).

The VU meter is then calibrated at 0-VU for this output level. Adjustment of VU meter is made by SVR-2, SVR-3.

ELECTRICAL ADJUSTMENTS

Bias Oscillator Frequency (fig. 6).

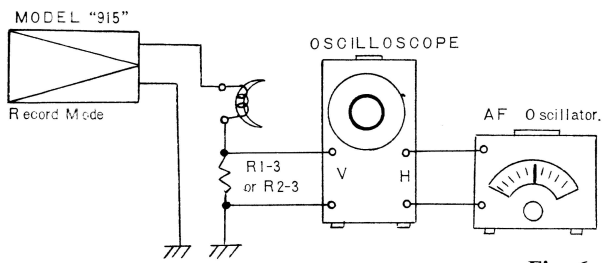

Fig. 6

Connect a 10 ohm resistor (R1-3 or R2-3) in series with the ground lead wire of the Record/Playback head as shown in Fig. 6.

Connect the vertical input of an Oscilloscope across a resistor; connect the horizontal input of the Oscilloscope to the output terminal of the audio frequency oscillator (A.F. Oscillator).

When the unit is set in Record mode and connected as above, a lissajous figure will appear on the oscilloscope.

Standard frequency is 80 Hz±5 Hz.

It is only necessary to measure one channel. If the frequency is not within the above range, change the oscillator coil or C-102 (0.003μF).

Bias Current (Fig. 7)

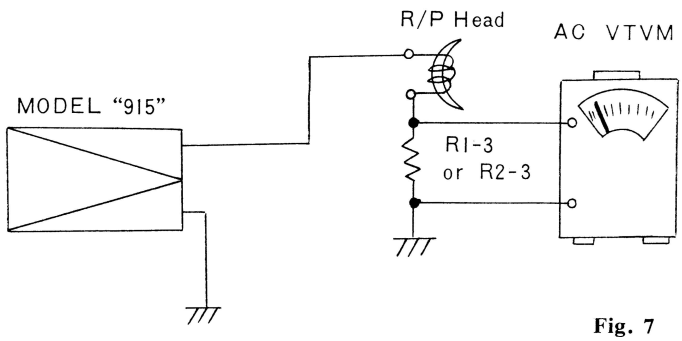

Fig. 7

Proper bias is necessary for optimum recording. Adjust the bias oscillator frequency as described before. Bias current during the recording is measured at both ends of R1-3 (CH-1) or R2-3 (CH-2). Adjustment is made by a semifixed capacitor so the voltage will be 10 mV on an AC VTVM. Recording bias current is 1mA (voltage across the 10 ohm resistor; $1mA \times 10^{-3} \times 10 = 0.01V$).

MAINTENANCE

Oiling and Cleaning

All rotating parts of this set are permanently lubricated.

To ensure smooth functioning, oil-less metal parts are sealed from exposure to air. Accordingly, these parts must be disassembled before reapplying lubricant. This tape recorder does not as a rule require oiling, however, it is preferable to oil once year or when parts are repaired, as follows:

Pressure Roller	1 drop
Flywheel Shatf	2 drops
Rewind Roller	1 drop
Motor Shatf	2 drops
Reel Base and Reel Base Pulley	1 drop
Counter and Shaft	1 drop
Rewind Idler	1 drop

If excessive oil is applied it may overflow along the shaft and adhere to the rubber parts of the belt and pressure roller, causing slipping, wow or flutter.

Care should be taken to limit the amount of oil applied.

Cleaning the Tape Transport Sections

The tape travels from the feed reel to the pinch roller through two tape guides, an erasing head, a recording head, pad, tape guide and capstan.

When dust or ferrous powder on the tape adheres to these parts, insufficient erasing, non-recording, poor high tones, reduced volume and slipping may result, so the utmost care should be taken when cleaning these parts.

Parts such as the tape guides, each head, the pinch roller and capstan should be thoroughly cleaned with a soft cloth or gauze moistened in alcohol or head cleaning solution.

Head De-Magnetization

Magnetization of the heads may result when the continuity of the heads is measured with an ohm meter. If it is necessary to measure head continuity, the heads should be de-magnetized after continuity check.

A magnetized head can be neutralized with the use of a standard de-magnetization tool. The tip of the tool should not be used through the pad, but should be thin enough to fit between the pressure pad and the head. A piece of cellulose tape should be placed over the head of the tool to prevent metal to metal contact between the tool and the head.

After de-magnetization, slowly remove the tool from the vicinity of the head before turning off the current.

MECHANICAL ADJUSTMENTS

Pressure Roller Tension

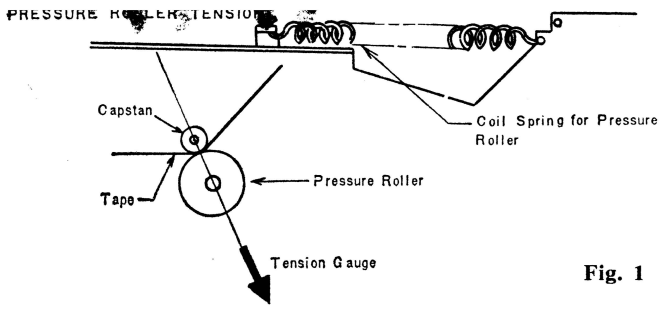

Fig. 1

Measurement (refer to fig. 1)

Pressure between the pressure roller and capstan should be gauged; satisfactory tension is between 900 and 1300 grams. To take the reading, play the tape then pull the pressure roller away from capstan until the tape stops and read the tension gauge. This process should be repeated two or three times.

Adjustment (refer to fig. 1)

Adjust the pressure roller spring. If spring tension is too weak, cut the spring 1/2 turns shorter or hook it to the next hole.

If spring tension is too strong, stretch the spring throughout its length.

Winding Torque For Play, Rewind & Fast Forward

Prepare an empty reel (1-3/4″ hub) with a few turns of thread and hook a tension gauge (150-450 grams) to its end.

Measurement (refer to fig. 2)

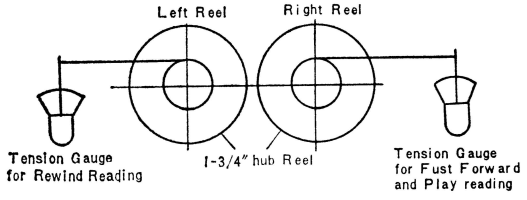

Fig. 2

Operated in each mode. Pull the thread in the opposite direction, and reed the gauge when the reel stops. Repeat each reading several times. Normal torque should be as follows:

	LEFT REEL	RIGHT REEL
FAST FORWARD	1.0 — 1.2 ozs	1.1 — 1.5 lbs
REWIND	1.0 — 2.1 lbs	1.4 — 2.1 ozs
PLAY	1.0 — 2.1 ozs	3.5 — 5.3 ozs

Adjustment

Forward & Playback

Unsatisfactory take-up torque could be caused by a worn belt, dirty take-up or motor pulley, worn or oily felt washer, or incorrect take-up torque.

1. Check the belt and take-up idler for wear and/or dirt. Change the belt if necessary, cleaning the motor pulley and take-up idler.
2. If the belt is in good condition check the felt washer for oil or wear.
3. If the felt washer is in good condition, check the springs. Bend the springs or change the thickness of the nylon washer to increase or decrease take-up torque.

Rewind

Insufficient rewind torque could be caused by worn belt or incomplete travel of the rewind roller lever.

Adjust the nut of the action rod so that the rubber rewind roller firmly presses against the motor pulley.

Tape Pad Pressure

Set the unit in Play mode. Press the tension gauge against the top of the tape pad plate. Read the tension gauge at the moment when the tape pads separate from the heads.

Normal pressure at the top of the tape pads should be 0.7 - 1.4 ozs.

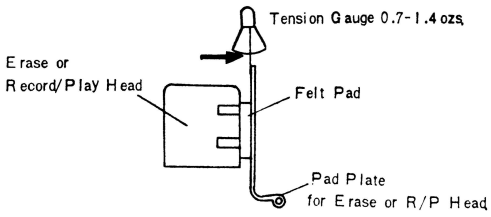

Fig. 3

ADJUSTMENT OF HEAD HIGHT & AZIMUTH

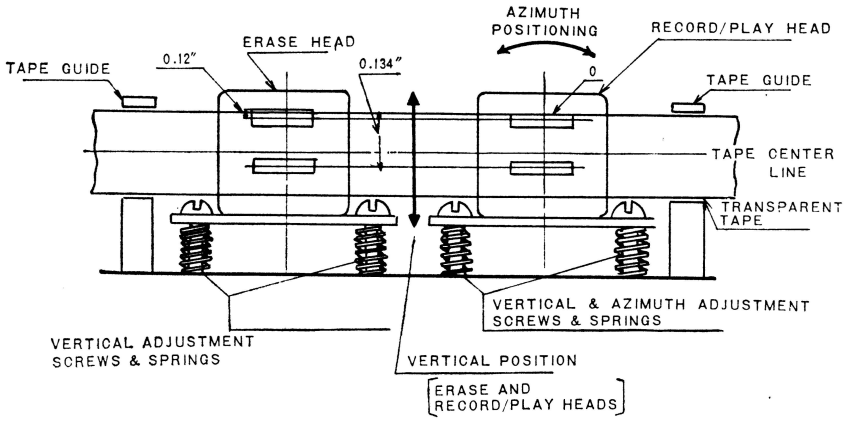

NOTE: 1) The Record/Play head can be adjusted in its vertical and azimuth positions.
2) The Erase head is adjusted only in its vertical position.

Fig. 4

EXPLODED VIEW (HEAD AREA TOP VIEW)

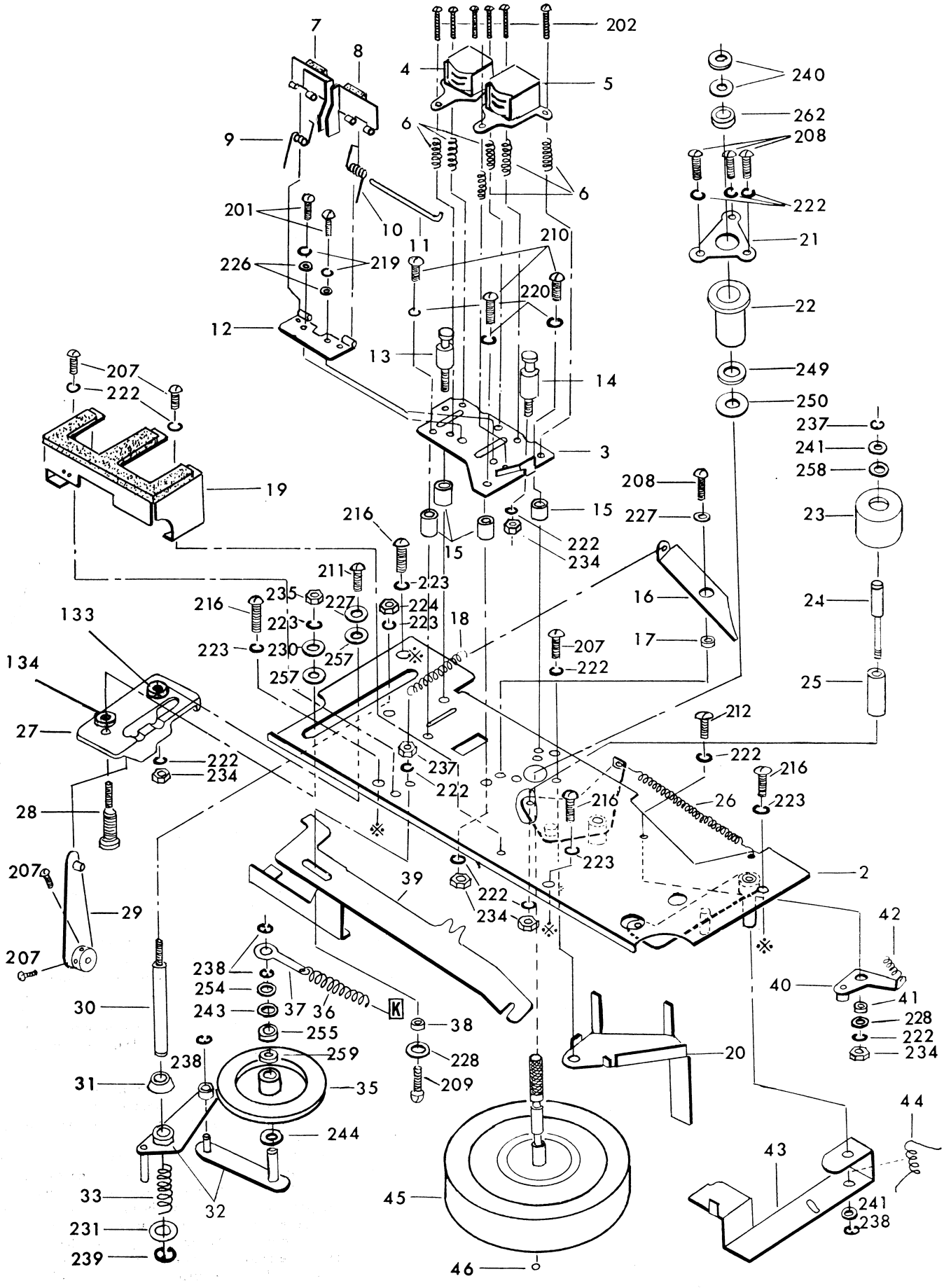

EXPLODED VIEW (TOP VIEW)

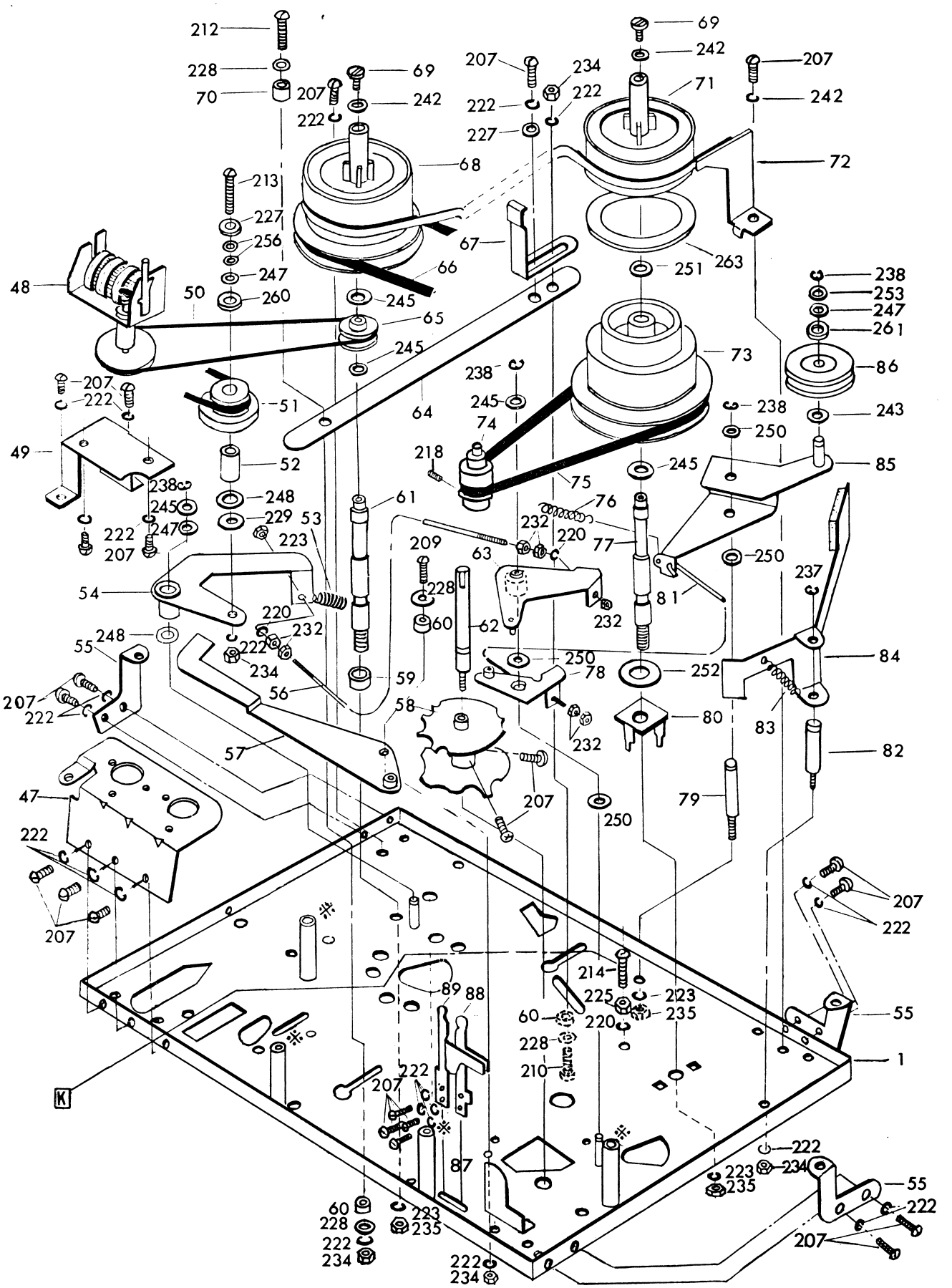

EXPLODED VIEW (BOTTOM VIEW)

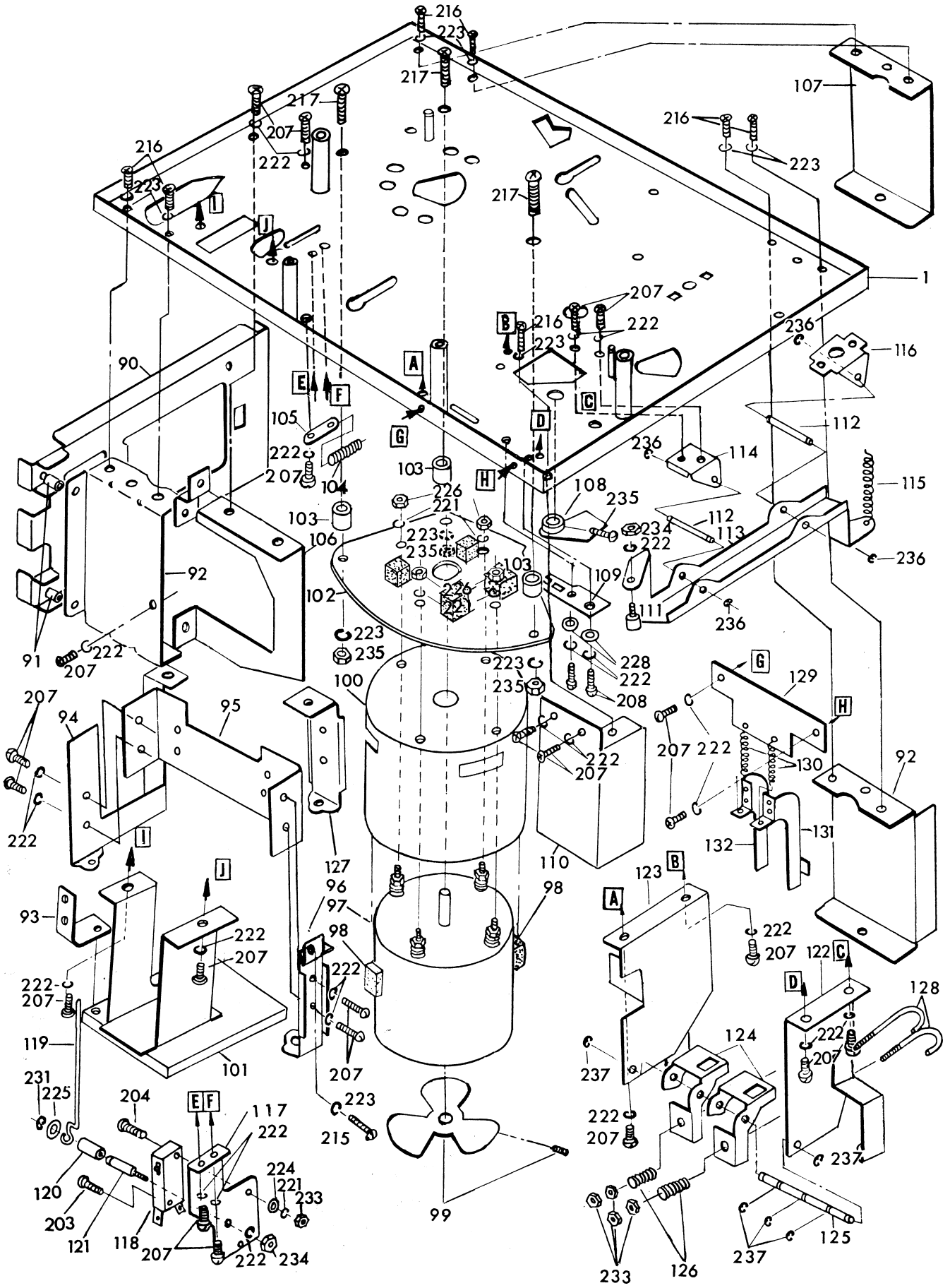

MAIN PARTS LOCATION

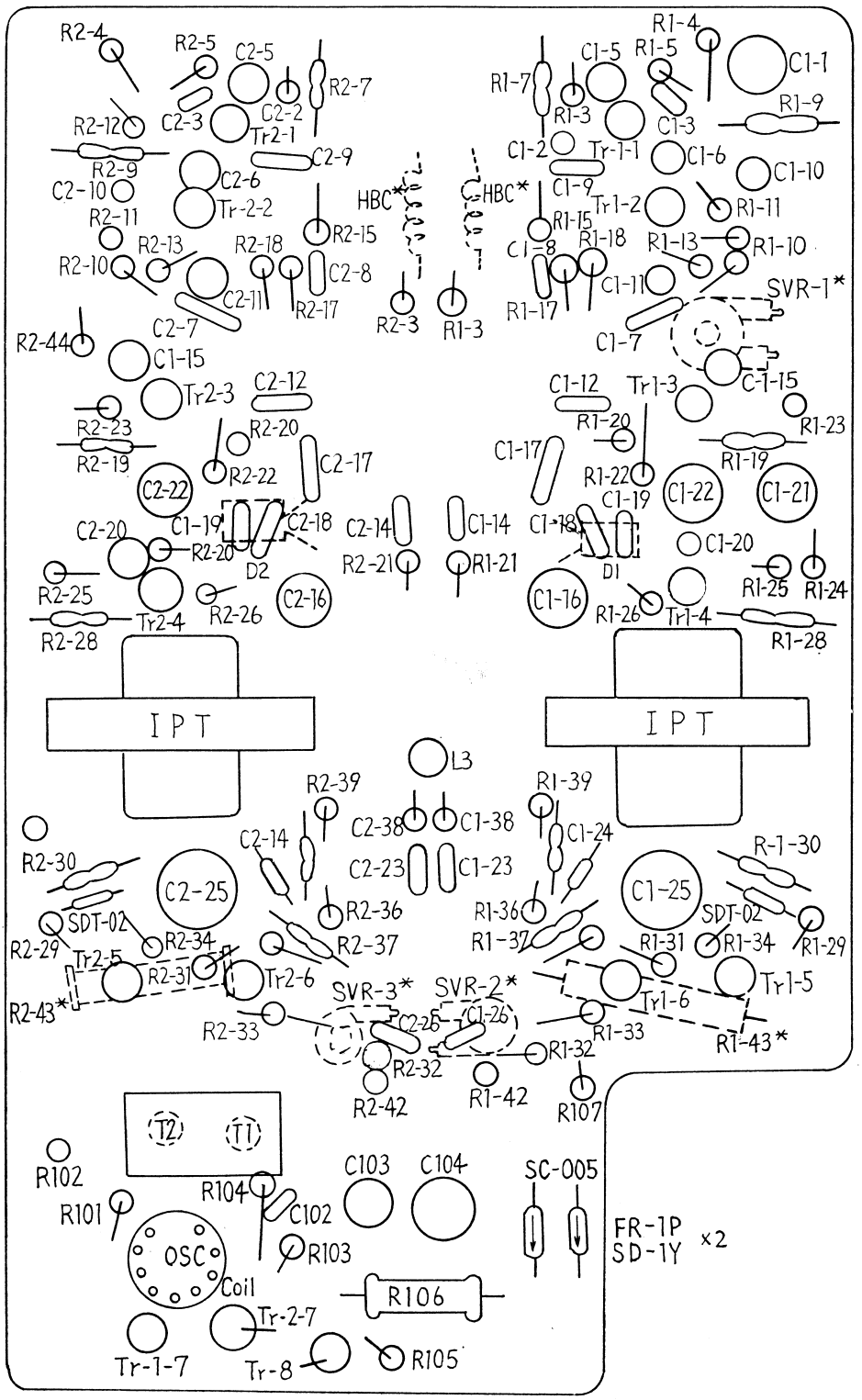

PARTS LIST

Parts No.	Description	Q'ty
PACKAGE		
R-498320	Individual carton	1
R-498321	Cushion	1
R-498322	Cushion, side	2
R-498323	Cushion, top	1
R-478215	Instruction book	1
R-478213	Circuit diagram	1
R-471099a	Caution label	1
R-358020	Polyethylene bag	1
CABINET		
R-S98047	Cabinet assy.	1
R-268385	-Specification plate	1
R-S8945	-Handle assy.	1
R-24887a	-Handle holder	2
R-12130a	-Hinge assy.	4
R-23746a	-Lock fixing metal	2
R-44067	-Leg	8
R-32672a	-Cover, heat sink	1
R-111737	-Plate nut	4
R-AT17101	Top panel assy.	1
R-318138a	-Top panel	1
R-268312	-Decoration metal, reel base hole	2
R-398088	-Cloth, speed selector shaft	1
	-Rubber cushion 5.5ø×13ø×1t	5
R-318136	-Head cover (B)	1
R-268314	-Name plate, head cover	1
R-268311	-Decoration plate, head cover	2
R-128032	-Tape guid	1
R-258030	-Guid pin, head housing	2
R-24889	Base, panel	4
	Washer 3.3ø×6.5ø×0.5t, panel	4
R-118346	Special washer, chassis	6
R-S88338	Head housing assy.	1
R-S88339	Volume control knob assy. (Right)	1
R-328076	Volume control knob (Left)	1
	Cushion rubber 5.5ø×1.3ø×1t, volume knob	1
R-S88340	Tone control knob assy.	1
R-328137	Recording button	2
R-248130	Speed selector knob	1
R-248221	Spacer, speed selector knob	1
R-288034	Function knob	1
R-S98048	Speaker box assy. (Left)	1
R-218003a	-Badge	1
R-368044	-Accessories compartment cover	1
R-44067	-Leg, cover fixing	2
R-S81006a	-Lock assy.	1
R-111848	-Plate nut, lock fixing	1
R-12129a	-Finge	2
R-111737	-Plate nut, hinge fixing	2
R-S6908	-Speaker	1
R-S8942	-Speaker cord assy.	1
R-S3008	-Lug, speaker cord fixing	1
R-S88304	-Back lid assy., speaker box	1
R-S98049	Speaker box assy. (Right)	1
R-368044	-Accessories compartment cover	1
R-44067	-Leg, cover fixing	2
R-S81006a	-Lock assy.	1
R-111848	-Plate nut, lock fixing	1
R-12129a	-Hinge	2
R-111737	-Plate nut, hinge fixing	2
R-S6908	-Speaker	1
R-S8942	-Speaker cord assy.	1
R-S3008	-Lug, speaker cord fixing	1
R-S88304	-Back lid assy., speaker box	1
CHASSIS		
R-418053a	Printed circuit board	1
R-118665a	Mounting metal, P.C.B.	1
R-118664a	Mounting metal, P.C.B.	1

Parts No.	Description	Q'ty
CHASSIS		
	Fiber washer 3.3ø×8ø×0.5t P.C.B mtg.	5
R-S3008	Lug, P.C.B.	1
R-118680	Stopper, headphone jack mtg.	1
R-328080	Spacer, headphone jack mtg.	1
R-158223	Coil spring, slide switch	2
R-258056	Fixing metal, thermistor	2
R-268441	Panel, jack connection	1
R-118257	Mounting metal, rotary switch	1
R-118697	Mounting metal, heat sink	1
R-118666a	Mounting metal, lever	1
R-118663a	Mounting metal, lever	1
R-112203	Bracket, power trans.	2
R-118293	Shield	2
R-118929	Band, C105 mtg.	1
	Tape 24×80 electrolytic	1
R-44283	Rubber tube, pilot lamp	1
R-398091	Cloth, recording button	1
	Insulator, fiber	5
R-268435	Panel, power selector	1
R-428087	Fiber, power selector	1
R-112432	Lug, lead fixing	1
ELECTRICAL PARTS		
R-W7848a	Power transformer	1
R-R124825	VR 10K ohm A type×2 (Volume) VR1-1, VR2-1	1
R-R124826	VR 10K ohm A type×2 (Tone) VR1-2, VR2-2	1
R-R11012	Semi VR 5K ohm B type (level meter adjust)	2
R-R11013	Semi VR 10K ohm B type (Gain balance adjust)	1
R-R7807	Special resistor 8 ohm 3W R1-43, R2-43	2
R-W8810	Oscillator coil	1
R-C0802a	Trimmer capacitor 10-60pF	1
R-W6824	I.P.T.	2
R-W1808	Choke coil 3.3mH (Peaking)	2
R-W1816	Choke coil 1.2mH (Dummy head)	1
R-W6818a	Choke coil (Ham adjust)	2
R-S5528L	Meter, recording level	2
R-S4319	Slide switch, record/play	2
R-S4266	Slide switch, speaker monitor ON/OFF	1
R-S4844	Rotary switch, speed equalizer	1
R-S4851a	Spring switch, power ON/OFF	1
R-S4886	Spring switch, Sound on Sound	1
R-S4868	Spring switch, automatic shut off	1
R-S2131	Headphone jack	1
R-S2139	Socket, Ext. SP. Mic.	4
R-S2837	Socket assy., AUX. IN, LINE OUT	1
R-S2840	Socket, DIN type	1
R-S2126	Socket assy., pilot lamp	1
R-S2133	Socket, voltage selector	1
R-S1227	Plug, voltage selector	1
R-S5044	Pilot lamp 6.3V 0.2A	1
R-S1044	Fuse 1A	1
R-S1038	Fuse holder	1
R-S3011	Lug board 2P	2
R-261193a	Heat sink, OSC. Tr.	2
R-278063a	Heat sink, Power Tr	4
R-S6889	Microphone	2
R-398065	Microphone stand	2
R-S88345	Recording tape 7″	1
R-31304b	Empty reel 7″	1
R-448079	Reel cap	2
R-S81249a	Patch cord (RCA pin - RCA pin)	2
	Splicing tape	1
	Transistor 2SB400A Tr1-1, Tr2-1	2
	Transistor 2SB303B Tr1-2, Tr1-3, Tr2-2, Tr2-3	4
	Transistor 2SB187 Tr1-4, Tr2-4	2
	Transistor 2SB22 Tr1-7, Tr2-7	2

PARTS LIST

Parts No.	Description		Q'ty
	ELECTRICAL PARTS		
	Transistor 2SB405	Tr1-5, Tr1-6, Tr2-5, Tr2-6, Tr8	5
	Diode 1S188 or 1S426G meter		2
	Thermistor SDT-02		4
R-S1234	Silicon rectifier FR-1P		2
R-S1805	Silicon rectifier SD-1Y		
	AC cord is chosen among following A, B, C & D.		
R-S1076a	Plug assy. English type w/cord	A	1
R-S3815	Terminal 3 pin	A	1
R-S1245	Plug, Australia 3 pin (acce.)	A	1
R-S3818	Power cord	B	1
R-S1817	Plug, Siemens type 2 pin	B	1
R-S3824	Terminal 2 pin	B	1
	3 wired cord assy. w/Photex type 3 pin plug	C	1
R-S3815	Terminal 3 pin	C	1
R-S1076a	Plug, English type 3 pin (acce.)	C	1
R-S3812	Power cord	D	1
R-S3824	Terminal	D	1
R-S8574b	AC adaptor, Siemens type 2 pin	D	1
R-S8575b	AC adaptor, English type 2 pin	D	1

Symbol No.	Description					Q'ty
	RESISTORS					
R1-22, R2-22	Carbon P type	18	ohm	±10%	¼W	2
R1-30, R2-30, R1-32, R2-32	〃	22	〃	〃	〃	4
R1-7, R2-7	〃	100	〃	〃	〃	2
R104	〃	180	〃	〃	〃	1
R1-37, R2-37, R107	〃	220	〃	〃	〃	3
R1-27, R2-27	〃	270	〃	〃	〃	2
R1-2, R2-2	〃	1.5K	〃	〃	〃	2
R1-29, R2-29, R1-31, R2-31, R1-24	〃	560	〃	〃	〃	5
R1-21, R2-21, R1-41, R2-41, R1-42, R2-42, R1-14, R105	〃	1K	〃	〃	〃	8
R1-17, R2-17	〃	1.5K	〃	〃	〃	2
R1-12, R2-12	〃	1.8K	〃	〃	〃	2
R1-26, R2-26, R2-44	〃	3.3K	〃	〃	〃	3
R1-16, R2-16, R1-23, R2-23, R1-28, R2-28	〃	3.9K	〃	〃	〃	6
R1-8, R2-8, R1-9, R2-9	〃	4.7K	〃	〃	〃	4
R1-13, R2-13, R1-36, R2-36	〃	5.6K	〃	〃	〃	4
R1-18, R2-18, R103	〃	6.8K	〃	〃	〃	3
R1-15, R2-15, R1-25, R2-25	〃	8.2K	〃	〃	〃	4
R1-11, R2-11, R1-20, R2-20	〃	10K	〃	〃	〃	4
R1-38, R2-38	〃	15K	〃	〃	〃	2
R1-40, R2-40	〃	68K	〃	〃	〃	2
R1-10, R2-10, R1-19, R2-19	〃	56K	〃	〃	〃	4
R1-39, R2-39	〃	82K	〃	〃	〃	2
R1-1, R2-1	〃	560K	〃	〃	〃	2
R1-45, R2-45	〃	10K	〃	〃	〃	2
R1-4, R2-4	〃	120K	〃	〃	〃	2
R1-33, R2-33, R1-34, R2-34	〃	1.8	〃	〃	½W	4
R1-5, R2-5	〃	27K	〃	〃	¼W	2
R1-46, R2-46	〃	56K	〃	〃	〃	2
R101	〃	5.6K	〃	〃	〃	1
R106	Carbon L type	18	〃	〃	1W	1
R102	〃	30	〃	〃	2W	1

Symbol No.	Parts No.	Description			Q'ty
		CAPACITORS			
C1-9, C2-9		Mylar 0.05μF	±10%	50V	2
C1-18, C2-18		〃 0.033μF	〃	〃	2
C1-17, C2-17		〃 0.02μF	〃	〃	2
C1-13, C2-13		〃 0.002μF	±20%	〃	2
C1-3, C2-3		〃 0.001μF	±10%	〃	2
C1-7, C2-7		〃 0.004μF	±20%	〃	2
C102		〃 0.003μF	〃	〃	1
C1-24, C2-24		Ceramic 100pF	+80, −20%	〃	2
C1-12, C2-12		〃 0.02μF	〃	〃	2
C1-26, C2-26		〃 0.005μF	+100, −0%	〃	2
C1-14, C2-14, C1-19, C2-19	R-C9831	Electrolytic 0.1μF		25V	4
C1-14, C2-14, C1-19, C2-19	R-C9126	〃 0.1μF		10V	4
C1-8, C2-8	R-C9120	〃 0.2μF		10V	2
C1-2, C2-2, C1-6, C2-6, C1-11, C2-11, C1-20, C2-20, C1-15, C2-15	R-C9131	〃 5μF		6V	10
C1-5, C2-5, C1-10, C2-10	R-C9105	〃 30μF		6V	4
C1-16, C2-16, C1-22, C2-22	R-C9134	〃 100μF		3V	4
C1-21	R-C9145	〃 100μF		10V	1
C103	R-C9808	〃 100μF		15V	1
C1-1	R-C9146	〃 200μF		10V	1
C1-25, C2-25, C104	R-C9165	〃 500μF		15V	3
C105	R-C9842	〃 2000μF		25V	1

Key No.	Parts No.	Description	Q'ty
		MECHANISM	
1	R-118243d	Main chassis	1
2	R-118244a	Sub chassis	1
3	R-118262a	Board, head mounting	1
4	R-S6838	Erase head	1
5	R-S6837	Record/Play head	1
6	R-15260a	Coil spring, head adjustment	6
7	R-248100	Pad plate, E head	1
8	R-258021	Pad plate, RP head	1
9	R-128051	Coil spring, E pad plate	1
10	R-128052	Coil spring, RP pad plate	1
11	R-128047	Shaft, pad hinge	1
12	R-248099	Hinge, pad plates	1
13	R-128094	Tape guide (Left)	1
14	R-128048	Tape guide (Right)	1
15	R-248098	Spacer, board (3) mounting	4
16	R-118263a	Lever, pad plates	1
17	R-24679a	Spacer, lever (16)	1
18	R-158132	Coil spring, lever (16)	1
19	R-118670	Bracket, VU meters w/cushion	1
20	R-118733a	Clamp, head lead	1
21	R-118698	Holder, flywheel bearing	1
22	R-S88473	Bearing, flywheel assy.	1
23	R-448064	Pinch roller assy.	1
24	R-148086	Shaft, pinch roller	1
25	R-248174	Pipe, under pinch roller	1
26	R-158047	Coil spring, pinch lever actuating	1
27	R-348045a	Slide, idler (35) lifting (Bakelite)	1
28	R-148095	Special screw	1
29	R-S88112	Arm, equalizer switch actuating	1
30	R-148094	Shaft, speed change lever	1
31	R-398045a	Spacer, idler (35) lifting (Bakelite)	1
32	R-S88109	Lever assy. idler (35)	1
33	R-158052	Coil spring, lever (32) lifting	1

PARTS LIST

Key No.	Parts No.	Description	Q'ty
		MECHANISM	
35	R-S88108a	Idler assy., flywheel drive	1
36	R-158048	Coil spring, idler pressure	1
37	R-118772	Lug plate, coil spring	1
38	R-24671a	Spacer, slide	1
39	R-118251	Slide plate, drive idler actuating	1
40	R-S88122	Lever assy. cam detent	1
41	R-24671a	Spacer, lever (40) mounting	1
42	R-158049	Coil spring, lever (40) tension	1
43	R-118712	Arm, Rec. button interlock	1
44	R-158184	Coil spring, arm (43) tension	1
45	R-S88107	Flywheel assy.	1
46		Ball, flywheel pivot	1
47	R-118658	Bracket, control mounting	1
48	R-S5814a	Tape counter	1
49	R-118709	Bracket, tape counter	1
50	R-448086	Belt, counter drive	1
51	R-S88110a	Rewing pulley	1
52	R-148101	Pipe, rewind pulley	1
53	R-158045	Coil spring, rewind pulley lever tension	1
54	R-S88111a	Lever, rewind pulley	1
55	R-118668	Bracket, top panel mtg.	3
56	R-128096	Bar, rewind transmission	1
57	R-S88121	Lever assy., brake actuating	1
58	R-S88123a	Cam assy., function	1
59	R-24667a	Spacer, feed reel spindle	1
60	R-24671a	Spacer, lever (57) & slide plate	3
61	R-148098	Feed reel spindle	1
62	R-148106	Cam shaft	1
63	R-S88119	Lever, rewind	1
64	R-118273	Slide plate, brake actuating	1
65	R-348058	Pulley, counter drive (Bakelite)	1
66	R-448055	Belt, rewind drive	1
67	R-118274	Brake bracket & adjustment	1
68	R-S88115	Feed reel base assy.	1
69	R-24865	Special screw, reel spindle	2
70	R-24672a	Spacer, brake actuating lever	1
71	R-S88113	Take-up reel base assy.	1
72	R-S88120	Band brake assy.	1
73	R-348023d	Take-up pulley assy.	1
74	R-278049e R-278050e R-278051e	Motor pulley, 60 Hz	1
	R-278052e R-278053e R-278054e	Motor pulley, 50 Hz	1
	R-148102	Screw 36×2, spare motor pulley	1
75	R-448054	Belt, take-up reel drive	1
76	R-158046	Coil spring, roller arm pressure	1
77	R-148096	Take-up reel spindle	1
78	R-S88116	Lever assy., fast forward	1
79	R-148099	Shaft, lever (85)	1
80	R-118259	Pushing up plate, take-up pulley shaft	1
81	R-128095	Bar, forward transmission	1
82	R-148104	Shaft, lever (84)	1
83	R-158044	Coil spring, lever (84) tension	1
84	R-118275	Lever, rewind back tension	1
85	R-118266	Lever, forward roller	1
86	R-S88301a	Fast forward roller assy.	1
87	R-118710	Stopper, interlock arm	1
88	R-118674	Lever, record button (Right)	1
89	R-118676	Lever, record button (Left)	1

Key No.	Parts No.	Description	Q'ty
		MECHANISM	
90	R-118928a	Bracket, Ext. connection panel mtg.	1
91	R-278130	Spacer, bracket (90) mtg.	2
92	R-118500e	Bracket, main chassis mtg.	2
93	R-118904	Reinforcing metal, bracket (101)	1
94	R-119192	Bracket, PCB. & heat sink (Left side)	1
95	R-118659	Bracket, power Tr. heat sink	1
96	R-118479f	Bracket, PCB.	1
97	R-S5168	Motor	1
	R-C7006	Motor capacitor	1
98		Cushion rubber, motor 7×15×15	2
99	R-268367	Motor fan, cooling with screw	1
100	R-118560a	Motor shield	1
101	R-S88336b R-S88482	Bracket, AC power receptacle terminal (2 wired AC cord only) Bracket, AC power receptacle terminal (3 wired AC cord only)	1
102	R-118561b	Motor mtg. board, w/rubber cushions	1
103	R-248287	Spacer, motor mtg.	3
104	R-15187	Coil spring, slide arm plate returning	1
105	R-S3008	Lug, coil spring (104) hook	1
106	R-118816	Holder, bracket (90) mtg.	1
107	R-118501	Bracket, main chassis (Top left)	1
108	R-S88311	Cam assy., switch S6 actuating	1
109	R-118967	Guide, record lever	1
110	R-118657	Bracket, main chassis (Bottom right)	1
111	R-148192	Tip, lever (113) actuating	1
112	R-148097	Shaft, lever (113)	2
113	R-118260	Pressure lever, take-up torque	1
114	R-118261	Bracket, lever (113) support	1
115	R-158050	Coil spring, lever (113) pressure	1
116	R-118258	Bracket, lever (113)	1
117	R-118587	Bracket, micro-switch S8 mtg.	1
118	R-S4836	Micro-switch	1
119	R-128056	Lever, micro-switch actuating	1
120	R-241305	Spacer, lever (119) mtg.	1
121	R-14233	Shaft, lever (119)	1
122	R-S88468	Bracket, PCB. & recording lever retaining (Right side)	1
123	R-S88469	Bracket, PCB. & recording lever retaing (Left side)	1
124	R-118662	Lever, record actuating	2
	R-258070	-Plate spring	1
		-Round head rivet 3×4	1
125	R-128111	Shaft, record actuating lever (124)	1
126	R-158271	Coil apring, R/P switch tension	2
127	R-119190	Bracket, PCB. & heat sink mtg.	1
128	R-148240	Hook, R/P switch (S1, 2) pulling	2
129	R-118930	Bracket, spring (130) mtg.	1
130	R-158207	Spring, lever (88 & 89) returning	2
131	R-118660	Reinforcing metal, lever (88)	1
132	R-118661	Reinforcing metal, lever (89)	1
133	R-248334	Spacer, 3mm ID., used with key No. 27	1
134	R-248335	Spacer, 4mm ID., used with key No. 27	1

Key No.	Description	Used w/Key No.	Q'ty
201	Screw, 2×4mm, Pan. Hd.	12	2
202	Screw, 2×10mm, Pan. Hd.	4, 5	6
203	Screw, 2.6×14mm, Pan, Hd.	118	1
204	Screw, 2.6×16mm, Pan. Hd.	118	1
205	Screw, 3×4mm, Pan. Hd.	48	2
206	Screw, 3×5mm, Pan. Hd.	105	1
207	Screw, 3×6mm, Pan. Hd.		51
208	Screw, 3×8mm, Pan. Hd.	16, 21, 109	6

PARTS LIST

Key No.	Description	Used w/Key No.	Q'ty
	MECHANISM		
209	Screw, 3×10mm, Pan. Hd.	39, 40, 57	3
210	Screw, 3×12mm, Pan. Hd.	3, 64	4
211	Screw, 3×14mm, Pan. Hd.	27	1
212	Screw, 3×20mm, Pan. Hd.	64	1
213	Screw, 3×22mm, Pan. Hd.	51	1
214	Screw, 3×35mm, Pan. Hd.	36	1
215	Screw, 4×6mm, Pan. Hd.	96, 129	3
216	Screw, 4×8mm, Pan. Hd.		14
217	Screw, 4×16mm, Pan. Hd.	102	3
218	Screw, 3×10mm, Hd.-less, Hexagonally holed	74	1
219	Spring washer, 2mm	12	2
220	Spring washer, 2.3mm	56	2
221	Spring washer, 2.6mm	118	2
222	Spring washer, 3mm		63
223	Spring washer, 4mm		27
224	Washer, 2.6mm. d×0.5mm.t	118	1
225	Washer, 2.6mm. d×0.3mm.t	119	1
226	Washer, 2mm. d×0.4mm.t	12	4
227	Washer, 3mm. d×0.5mm.t	16, 51, 67	4
228	Washer, 3mm. d×1mm.t		9
229	Washer, 3mm. d×1mm.t	51	1
230	Washer, 4mm. d×0.6mm.t	27	1
231	Washer, 6mm. d×1mm.t	33	1
232	Nut, 2.3mm	56, 81	8
233	Nut, 2.6mm	118, 128	5
234	Nut, 3mm		12
235	Nut, 4mm		14
236	"E" ring, 2mm	113, 119	5
237	"E" ring, 3mm	23, 84, 126	7
238	"E" ring, 4mm	35, 37, 43, 54, 62, 63, 86	6
239	"E" ring, 5mm	32, 85	2
240	Washer, rubber, 4mm.d×1mm.t	45	2
241	Washer, nylon, 4.2mm.d×0.5mm.t	23	1
242	Washer, nylon, 4.7mm.d×0.5mm.t	68, 71	2
243	Washer, nylon, 5.2mm.d×0.5mm.t	86	1
244	Washer, nylon, 5.2mm.d×0.3mm.t	35	1
245	Washer, nylon, 5.2mm.d×0.3mm.t		7
246	Washer, nylon, 5.2mm.d×0.5mm.t	86	1
247	Washer, nylon, 5.5mm.d×0.5mm.t	51, 86	2
248	Washer, nylon, 5.5mm.d×0.5mm.t	54	1
249	Washer, nylon, 6.2mm.d×0.3mm.t	45	1
250	Washer, nylon, 6.2mm.d×0.5mm.t	45	3
251	Washer, nylon, 7.2mm.d×0.5mm.t	73	1
252	Washer, nylon, 7.2mm.d×1mm.t	73	1
253	Washer, polyethylene, 4.5mm.d×1mm.t	86	1
254	Washer, polyethylene, 5mm.d×1mm.t	35	1
255	Washer, polyethylene, 5.2mm.d×0.3mm.t	35	1
256	Washer, polyethylene, 5.5mm.d×1mm.t	51	2
257	Washer, polyethylene, 6.2mm.d×0.3mm.t	27	2
258	Washer, felt, 4.5mm.d×2mm.t	23	1
259	Washer, felt, 5.5mm.d×1mm.t	35	1
260	Washer, felt, 5.5mm.d×1mm.t	51	1
261	Washer, felt, 5.5mm.d×2mm.t	86	1
262	Washer, felt, 6mm.d×1mm.t	45	1
263	Washer, felt, 37mm.d×1mm.t	71	1

CIRCUIT DIAGRAM

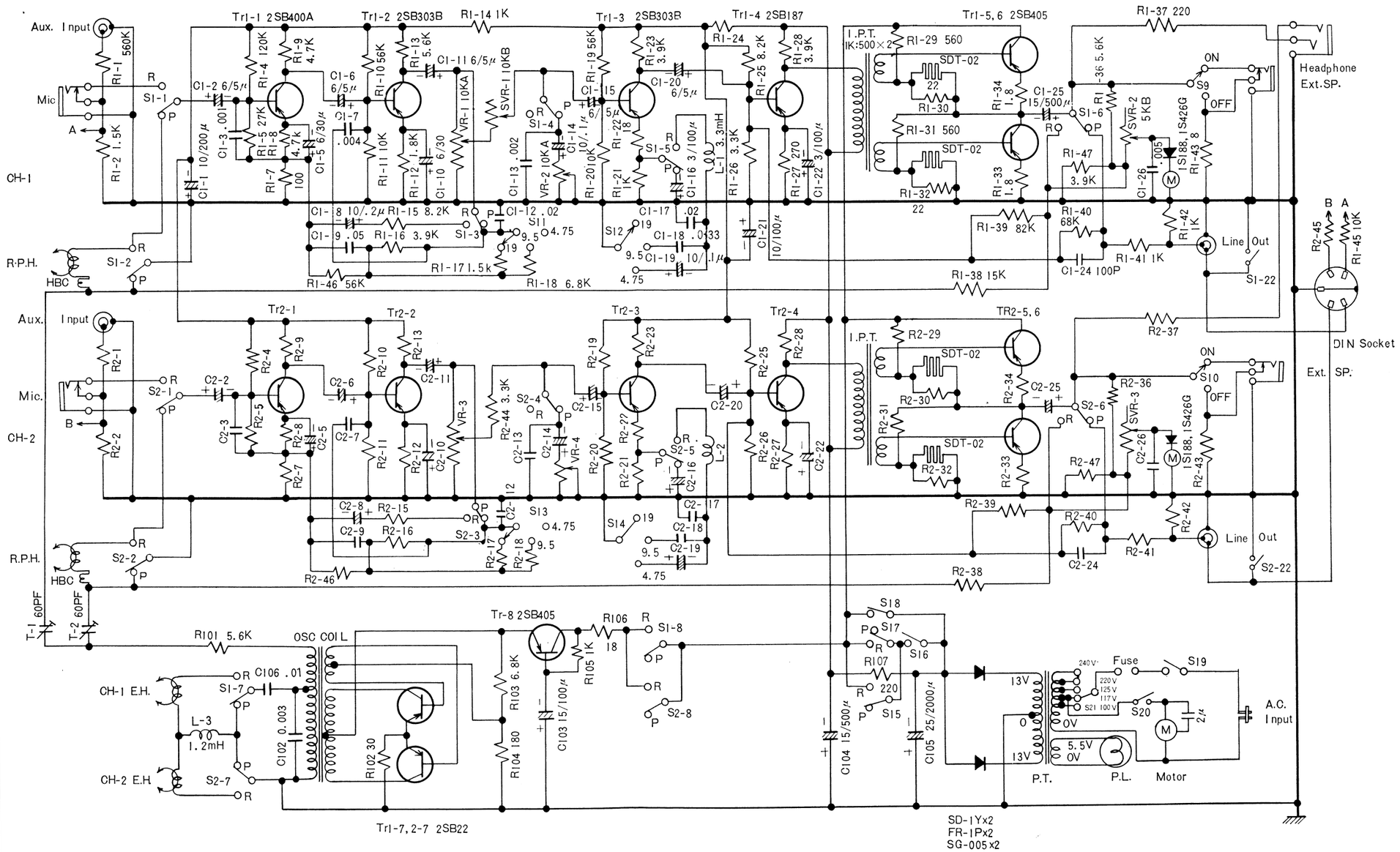

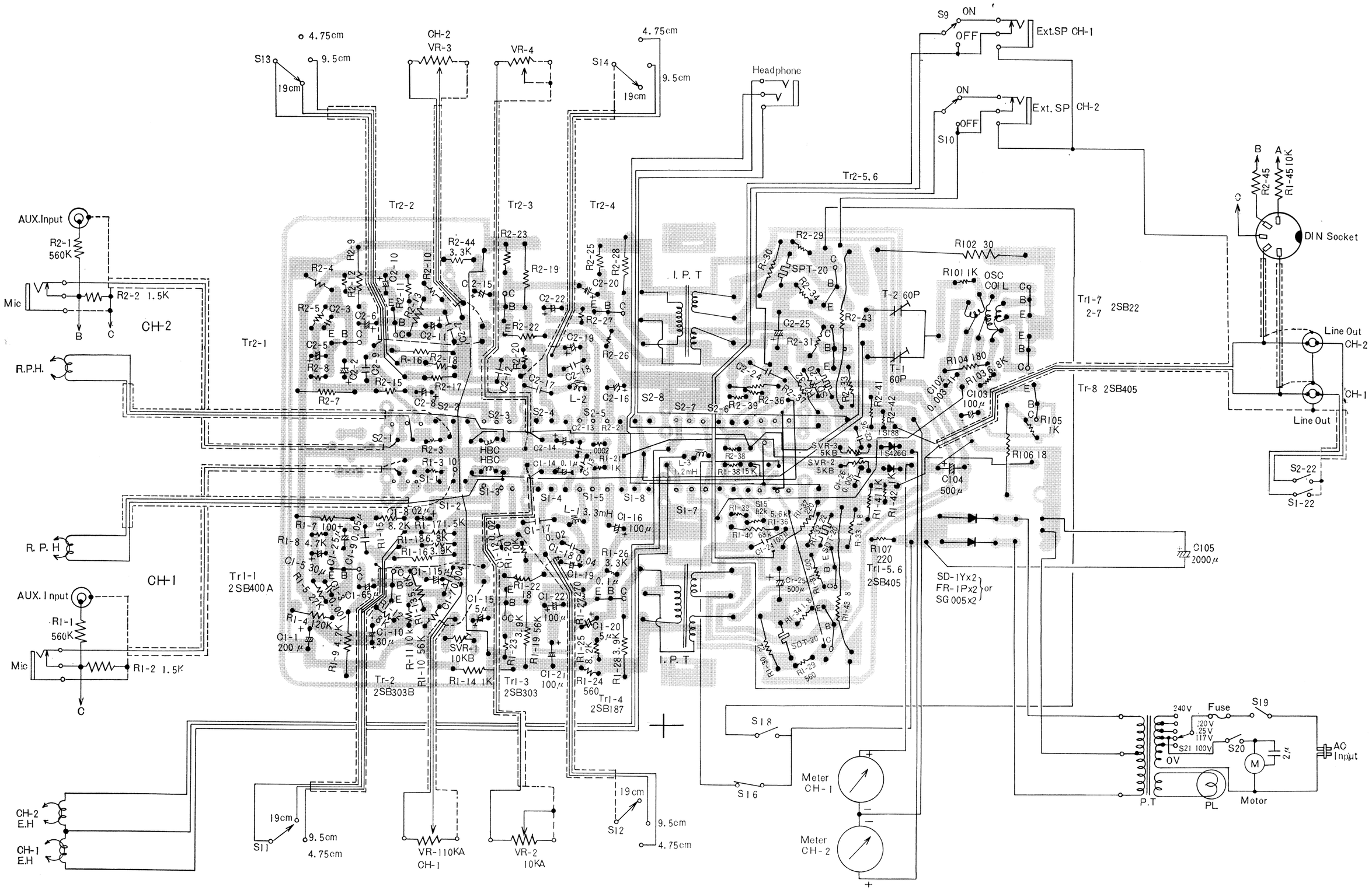
AUX.Input
R2-1 560K
Mic
R2-2 1.5K
CH-2
R.P.H.
R. P. H
CH-1
AUX. Input
R1-1 560K
R1-2 1.5K
CH-2 E.H
CH-1 E.H
S13
4.75cm
9.5cm
19cm
CH-2 VR-3
VR-4
S14
Headphone
S9 ON OFF
Ext.SP CH-1
S10 ON OFF
Ext. SP CH-2
Tr2-1
Tr2-2
Tr2-3
Tr2-4
Tr2-5, 6
Tr1-1 2SB400A
Tr-2 2SB303B
Tr1-3 2SB303
Tr1-4 2SB187
Tr1-7 2-7 2SB22
Tr-8 2SB405
Tr1-5. 6 2SB405
I. P. T
SPT-20
SDT-20
OSC COIL
T-2 60P
T-1 60P
SVR-1 10KB
SVR-2 5KB
SVR-3 5KB
1S188
1S426G
SD-1Yx2
FR-1Px2
SG 005x2
or
DIN Socket
Line Out CH-2
Line Out CH-1
S2-22
S1-22
S11
S12
S16
S18
S19
S20
S21
240V
220V
125V
117V
100V
0V
Fuse
P.T
PL
Motor
AC Input
Meter CH-1
Meter CH-2