SANYO

8-track stereo tape player

MODEL MR-56P

SERVICE MANUAL

SANYO ELECTRIC CO., LTD.
INTERNATIONAL DIVISION: SANYO ELECTRIC TRADING CO., LTD.
OSAKA, JAPAN

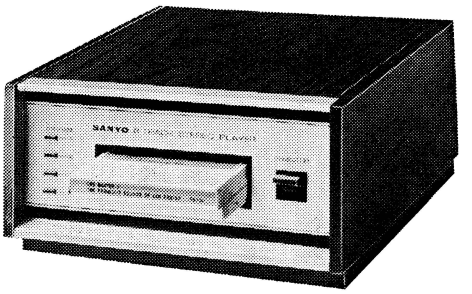

SPECIFICATIONS

Tape speed	3-3/4 ips ± 3%
Tape	LEAR JET PAK 8-track Stereo tape cartridge
Output power	0.775 V×2
Frequency response	100 ~ 10,000 c/s
Transistors	2SB400×2, 2SB303×4
Diodes	FR-1 P×2, DS-1 P×2
Power source	AC 117 V or 230 V, to order
Power consumption	10.5 W
Dimensions	9″ (W) ×9-1/4″ (D) ×4-3/8″ (H)
Weight	6.6 lbs.

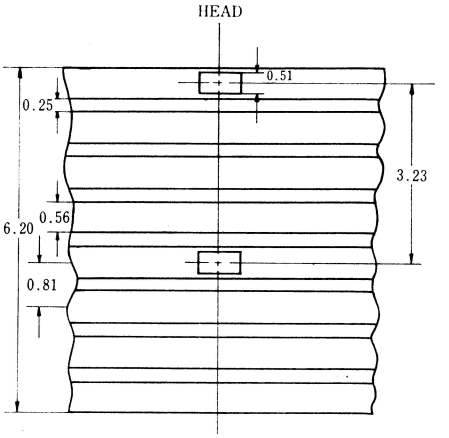

Fig 1 UNIT : m/m

Adjustment of Heads

Improper positioning of heads will cause deterioration of output signal power, loss of high tones, and "cross-talk" interference from the other track. To keep the set performing at its full capabilities, careful attention should be paid to head adjustments.

1. **An imaginary line intersecting the head from the core slot to the back should be exactly perpendicular to the tape running through the head assembly slot. The head should not slant in either direction.**
2. **The upper edge of the head slit should be adjusted so that it is 0.05 mm below the upper edge of the tape (fig. 1).**
3. **After the above adjustments, play a standard tape with a 1 Kc/s signal and adjust the screw indicated in fig. 2 for maximum output power.**
4. **Then play a standard tape with an 8 Kc/s signal and adjust the screw indicated in fig. 3 for maximum output power.**

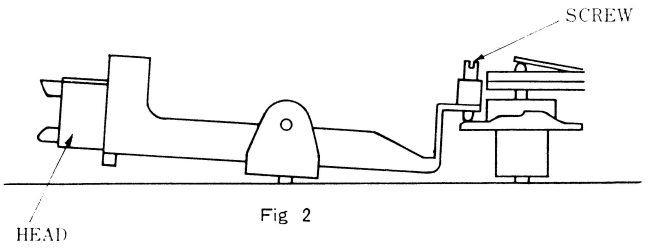

Fig 2

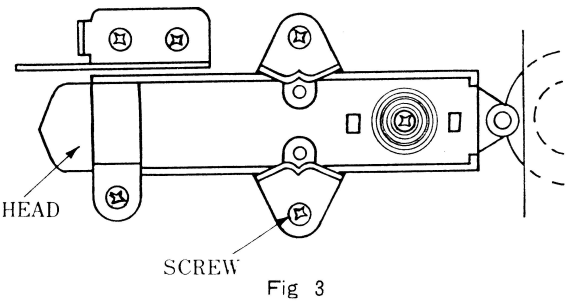

Fig 3

Circuit Adjustment

Connect a 1 Kc/s – 65 db signal to the CH-1 (CH-2) head input terminal and the amplifier earth circuit; then adjust the volume so that the output power of the AUX output terminal is 350 mV when set at its halfway position. Open load impedance.

Labrication

When lubricating revolving parts, take care to apply only a small amount of machine or spindle oil to each lubrication point. If too much oil is applied, it will leak from the spindle to the belt, capstan, motor pulley or other parts, causing slippage, wow and flutter.

HEAD

Ref. No.	Parts No.	Description	Q'ty
22	R-S 6433	Play back head	1
23	R-118420d	Arm-head fixing	1
24	R-128079a	Mtg. metal-head fixing	1
		Pan head screw, S 2.6×6	1
25	R-128087b	Tape guide	1
		Pan head screw, S3×4	2
		Spring washer, S 3	2
26,27	R-S 88188a	—Mtg. metal, assembly-arm fixing	1
26	R-128078a	—Mtg. metal	1
27	R-128081a	—Mtg, metal	1
		—Pan head screw, 3×8	2
		—Steel ball, 2ϕ	4
		—Round head rivet, B 2×4	2
29	R-248163	Boss-cam	1
30	R-148164b	Special screw-head height adjusting	1
55	R-258044	Plate spring	1
	R-128134	Bar	1

CAM

Ref. No.	Parts No.	Description	Q'ty
31	R-118361	Mtg. metal-cam	1
		Pan head screw S 3×6	2
		Spring washer, S 3	2
32	R-138006	Plate spring-cam shaft press	1
		Pan head screw, S 2×6	2
		Spring washer, S 2	2
		Hexagon nut (1), S2	2
33	R-288017	Cam-head height selecting	1
34	R-128067a	Shaft-cam shaft	1
35	R-398041a	Bearing-cam shaft	1
36	R-118291	Mtg. metal-bearing	1
		Pan head screw, S 2×6	3
		Spring washer, S 2	3
44	R-288023a	Slide-cam	1
37	R-148130	Boss-slide fixing	1
		Washer, nylon 4.1ϕ×6.5ϕ×0.25 t	1
		Stop ring 3ϕ	1

Ref. No.	Parts No.	Description	Q'ty
		Hexagon nut (1) 3ϕ	1
		Spring washer 3ϕ	1
38	R-418031	Printed circuit board-channel indicating	1
39	R-258027	Plate spring-channel indicating	1
		Pan head screw S2ϕ×4	1
		Spring washer S2	1
40	R-S4843	Plunger	1
		Pan head screw, S 3×6	4
		Spring washer S3	4
41	R-118380	Slide-cam	1
45	R-258034	Plate spring-cam stopper	1
		Round head rivet, 2×4	1
50	R-148171a	Boss-slide (R-288023) fixing	1
43	R-258035	Plate spring-slide (R-288023) pressing	1
		Round head rivet 2×4	1
49	R-248171a	Bearing-cam shaft	1
42	R-118506a	Mtg. metal-cam	1
		Pan head screw, S 3×6	4
		Spring washer, S 3	4

ELECTRICAL PARTS

Ref. No.	Parts No.	Description	Q'ty
	R-S 3008	Lug-lead	1
		Pan head screw, S 3×8	1
		Spring washer, S 3	1
		Carbon P type, 4.7 ohm, ½W— R102	1
	R-S 1832	Diode, IS 559, 300 V	1
	R-C 9845	Electrolytic capacitor 20μF, 500WV C102	1
	R-S 3007	Lug plate-hook up	1

COIL SPRING

Ref. No.	Parts No.	Description	Q'ty
47	R-158113	Coil spring-head arm press	1
		Pan head screw, S 3×6	1
		Hexagon nut, S 3	1
48	R-158114	Coil spring-Mtg. metal (head) fixing	1
46	R-158115	Coil spring-plunger actuator	1

Printed in Japan

CIRCUIT DIAGRAM

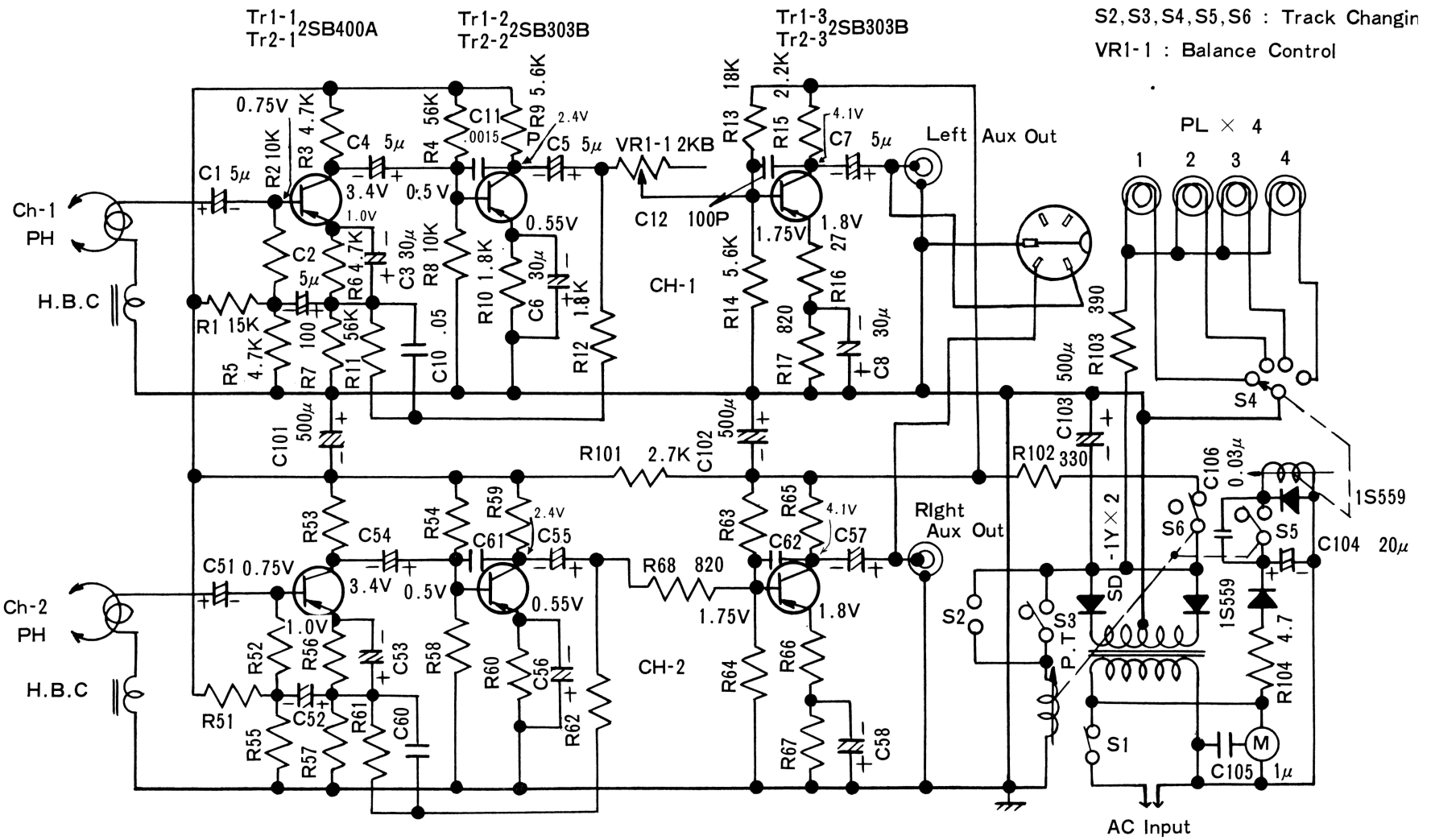

Flywheel Care

The flywheel cover must be removed when lubricating the flywheel. There is a special screw for this purpose. (see fig.4)

Put the tip of the oiling spout into the lubrication holes and apply 1 or 2 drops in each.

If the flywheel revolution becomes sluggish after long use, remove the flywheel mounting screw and clean the shaft and wheel with alcohol; then oil them.

(Note; when removing flywheel spindle be careful not to damage the rubber washers which keep the flywheel shaft oil from leaking.)

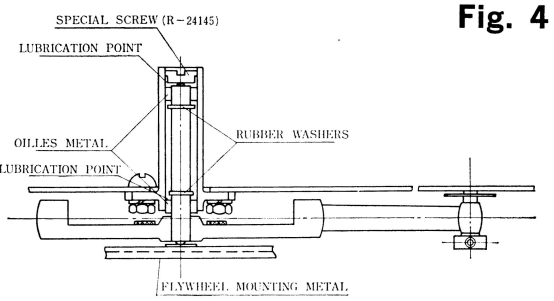

Fig. 4

Cleaning Tape Head Assembly

The parts which come into contact with the tape (capstan, heads, tape guides, automatic program selector switch) should be cleaned with gauze (and alcohol if they are encrusted) from time to time. Dust or ferrous oxide deposits will deteriorate performance and cause wow and flutter.

EXPLODED VIEW

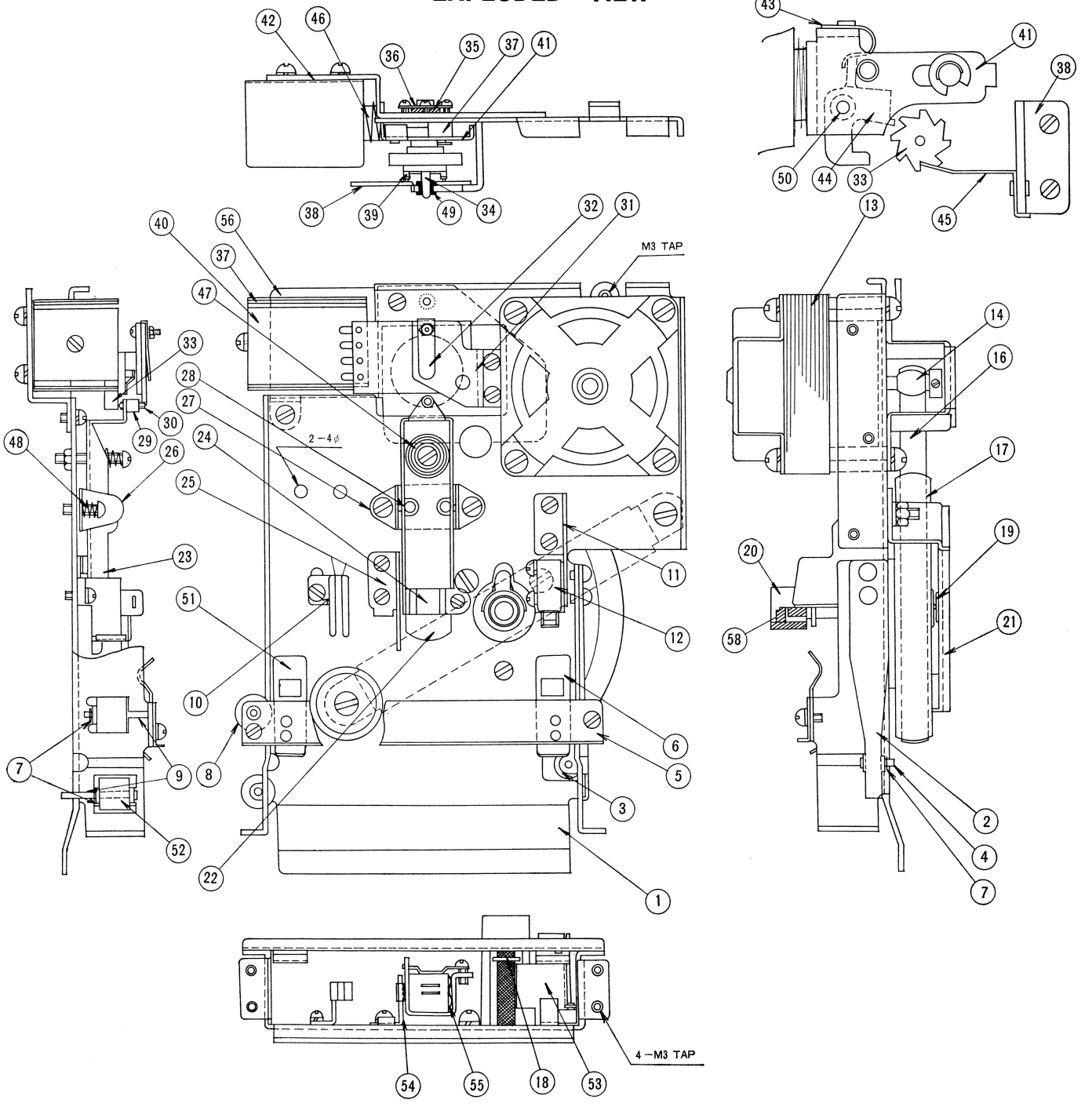

PARTS ROCATION

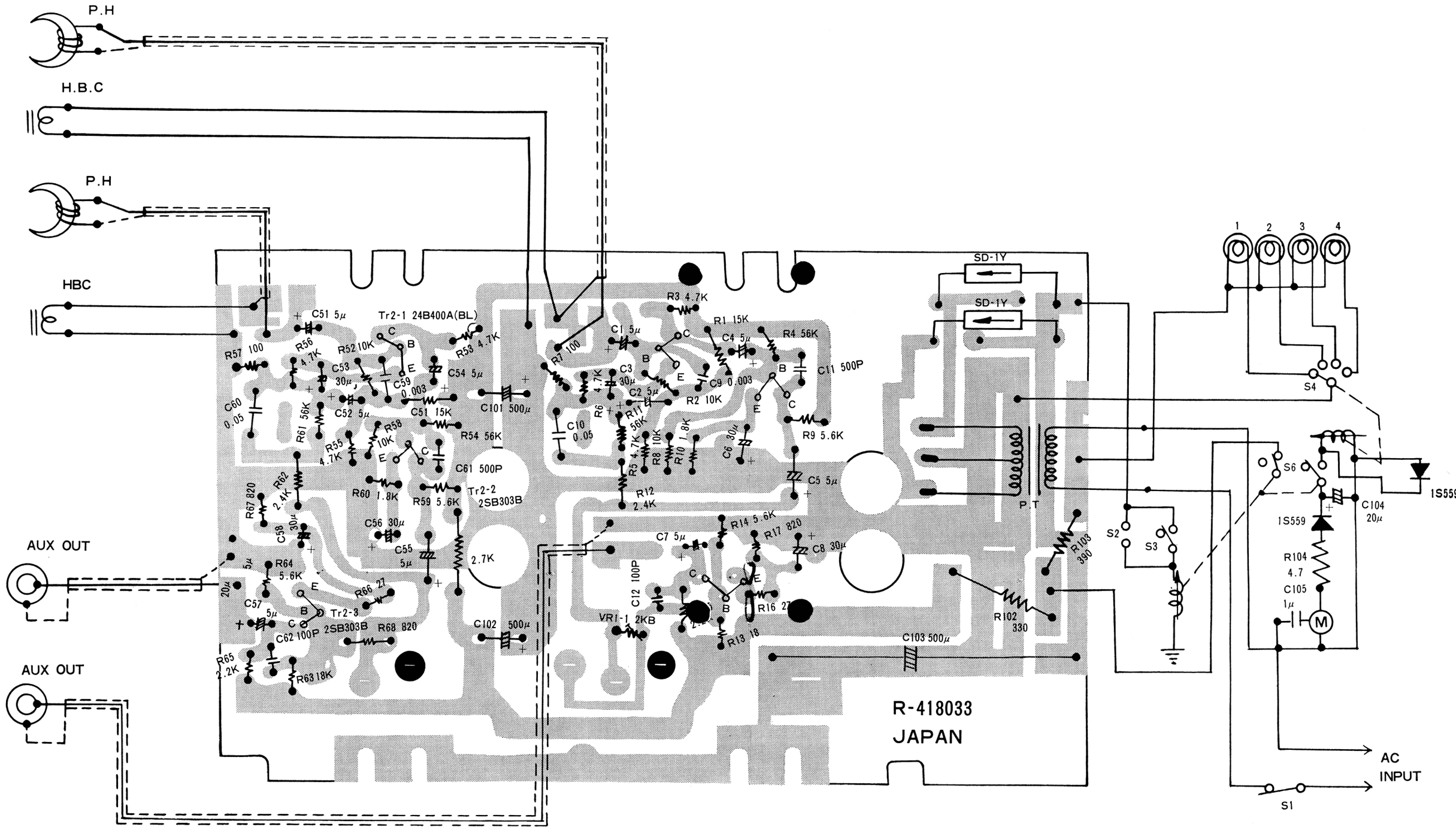

S1 : Power SW

S2·S3·S4·S5·S6 : TRACK CHANGING·SW

VR1-1 : BALANCE CONTROL

Description	Q'to
Pan head screw 3×10	4
Bolt nut washer 3	4
Bolt nut washer 3	3
Hexagon nut (1) 3	3
Bolt nut washer 3	3
Pan head screw 3×10	4
Small screw washer 3	4
Pan head screw 3×8	3
Pan head screw 3×8	4
Bolt nut washer 3.3×10×1t	4
Spring washer 3	3
Pan head screw 3×6	3
Spring washer 3	2
Pan head screw 3×8	2
Bolt nut washer 3.3×10×1t	2
Pan head tapping sctew 3×6	2
Pan head tapping screw 3×6	2
Pan head screw 3×8	4
Spring washer 3	4
Round disk head screw 2×6	2
Spring washer 2	3
Hexagon nut (1) 2	3
Pan head screw 3×6	1
Bolt nut washer 3	1
Spring washer 3	4
Pan head screw 3×6	4
Pan head screw 2×6	1
Small screw washer 2	1
Pan head screw 3×6	2
Bolt nut washer 3	2

RESISTORS AND CAPACITORS

Description	Q'ty
Carbon P type 15K ohm ±10% ¼W R1, 51	2
Carbon P type 10K ohm ±10% ¼W R2, 52	2
Carbon P type 4.7K ohm ±10% ¼W R3, 53	2
Carbon P type 56K ohm ±10% ¼W R4, 54	2
Carbon P type 4.7K ohm ±10% ¼W R5, 55, 6, 56	4
Carbon P type 100 ohm ±10% ¼W R7, 57	2
Carbon P type 10K ohm ±10% ¼W R8, 58	2
Carbon P type 5.6K ohm ±10% ¼W R9, 59, 14, 64	4
Carbon P type 1.8K ohm ±10% ¼W R10, 60	2
Carbon P type 1.8K ohm ±10% ¼W R12, 62	2
Carbon P type 56K ohm ±10% ¼W R11, 61	2
Carbon P type 18K ohm ±10% ¼W R13, 63	2
Carbon P type 2.2K ohm ±10% ¼W R15, 65	2
Carbon P type 27 ohm ±10% ¼W R16, 66	2
Carbon P type 820 ohm ±10% ¼W R17, 67, 68	3
Carbon P type 2.7K ohm ±10% ¼W R101	1
Carbon P type 330 ohm ±10% ¼W R102	1
Solid 390 ohm ±10% ½W, R103	1
Mylar Square 0.05μF ±10% 50V C10, 60	2
Mylar Square 0.0015μF ±20% 50V C11, 61	2
Oil 0.03μF ±20% 400V C106	2
Ceramic Square 100μF ±20% 50V C12, 62	2

MECHANISM CHASSIS

Ref. No.	Parts No.	Description	Q'ty
1	R-118355e	Chassis	1
2	R-128069a	Plate spring-cartridge press	1
		Round head rivet, 3×6	2
3	R-278065	Pulley-cartridge press	1
4	R-128073	Shaft-pulley	1
5	R-118356	Mtg. metal-cartridge	1
		Pan head screw 3×6	2
		Spring washer 3	2
		Round head rivet 2×4	4
7	R-128068	Special washer-shaft (pulley)	4
8	R-398031a	Pulley-cartridge press, left	1
9	R-158167	Shaft-pulley	2
10	R-S4824a	Spring switch-automatic channel select	1
		Pan head screw 3×6	1
		Spring washer 3	1
11	R-118357	Mtg. metal-micro switch	1
		Pan head screw 3×4	2
		Spring washer 3	2
12	R-S4840	Spring switch-power	1
		Pan head screw 2.6×12	2
6	R-258067	Plate spring-cartridge press, right	1
51	R-258068	Plate spring-cartridge press, left	1
52	R-398056a	Pulley-cartridge press	1
53	R-128131a	Plate spring	1
	R-118960	Mtg. metal	1

MOTOR

Ref. No.	Parts No.	Description	Q'ty
13	R-S5169	AC motor (230V set only)	1
	R-S5162b	AC motor (117V set only)	1
		Pan head screw 4×6	3
		Spring washer 4	3
14	R-278114	Pulley-motor pulley 50 c/s	1
	R-248281	Pulley-motor pulley 60 c/s	
		Pan head screw 2.6×4	1
		Washer, fiber-oil stopper	1
16	R-448036	Flat belt	1
17	R-S88159a	—Flywheel, assembly	1
	R-288024	—Flywheel	1
	R-128074a	—Shaft-flywheel	1
		—Steel ball	2
		Felt white, 26φ×40φ×1t	1
		Washer, rubber, 4φ×8φ×1t	2
		Washer, 8.5φ×0.5t-steel ball holder	1
20	R-S88170a	—Shaft bearing, assembly-flywheel	1
	R-288019	—Bearing	1
	R-228006a	—Oil-less metal	2
		Pan head screw, S 4×8	1
		Spring washer, S 4	2
		Hexagon nut (3), S 4	2
		Disk head screw, S 3×8	1
		Spring washer, S 3	1
		Hexagon nut (3), S 3	1
		Disk head screw, S 4×8	1
21	R-118358	Mtg. metal-flywheel holder	1
		Pan head screw, S 4×8	2
		Spring washer, S 4	2
		Hexagon nut (1), S 4	2
58	R-248145	Special screw-flywheel	1
		Capacitor-motor going	1
	R-44208	Cushion	3
	R-448074	Seat	1

PARTS LIST

F-252M

CABINET

Parts No.	Description	Q'ty
R-S 98038	—Cabinet, assembly	1
R-468047	—Cabinet	1
R-118624	—Mtg. metal-chassis	1
	—Bolt nut washer-mtg. metal 3.3×10×1t	8
	—Round head wooden screw-mtg. metal 3.1×10	8
R-118625	—Mtg. metal-chassis	1
	—Wooden screw-mtg. metal (R-118684) 3.1×10	2
R-118684	—Mtg. metal-back lid	2
	—Bolt nut washer-mtg. metal (R-118684) 3.3×6×1t	2
	—Disk head nail-mtg. metal (R-118684) 1φ×8	4
R-118938	—Bracket for reinforcing	2
	Screw-mtg. metal (R-118458) 3×14	4
	Spring washer-mtg. metal (R-118458) 3	4
	Felt, black, 6×30×3t-cabinet	1
	Felt, black, 26φ×60φ×6t-cabinet	1
R-118458a	Mtg. metal-chassis	2
R-478179	Circuit diagram-cabinet	1
	Wooden screw-mtg. metal (R-118443) 2.4×8	4
R-118443	Mtg. metal-back lid	2
	Hexagon nut-mtg. metal (R-118458) (1) 3	4
R-278077	Panel, front	1
R-318079	Program indicator-panel	4
R-328064a	Decoration metal-panel	1
R-268183	Metal strap-panel	2
	Felt, black-light shading	3
	Cushion, 8×118-decoration metal (R-328064)	1
	Cushion, 8×35-decoration metal (R-328064)	2
	Cushion, 8×102-decoration metal	1
R-35264	Leg	4
R-428026a	Lid-bottom	1
R-428046a	Lid, back	1
R-118673	Fixing metal- AC cord stopper	1
R-428025a	Cushion	1

CHASSIS

Parts No.	Description	Q'ty
R-418033a	Printed circuit board-amplifier	1
R-118438a	Mtg. metal-P.C.B. reinforcing	1
R-S88143a	—Mtg, metal, assembly-P.C.B and cabinet	1
R-118558a	—Mtg. metal	1
R-118439a	—Mtg. metal	1
R-118559	—Mtg. metal	1
R-118446a	Mtg. metal-P.C.B. fixing	2
R-S3008	Lug-lead	2
R-112432	Lug-lead	2
R-118626	Reinforcement-cartridge guide	1
R-118441a	Mtg. metal-capacitor	1
R-118435	Chassis-lid and P.L. fixing	1
R-328043	Knob-channel selector	1
R-148165	Shaft-front lid fixing	1
R-158112a	Coil spring-front lid fixing	1
R-44045	Cushion-P.L. fixing	4
R-268185a	Front lid	1
R-S3008	Lug-lead	1
R-44229	Cushion-electrolytic capacitor, C 103	2

Parts No.	Description	Q'ty
R-S88318	—Mtg. metal, assembly	1
R-118859	—Mtg. metal	1
R-118644	—Mtg. metal-socket fixing	1
R-112856	Mtg. metal-(Use 3 wire cord only)	1
R-44045	Cushion-Chassis	4
	Sheet	1
	Tape-20×40	1
	Mechanism-TM-56PS	1

ELECTRICAL PARTS

Parts No.	Description	Q'ty
R-W 7839	Power transformer (230 V set only)	1
R-W 7825	Power transformer (117 V set only)	1
R-W 1824	Hum balance coil	2
R-S 4815	Relay	1
R-R 110809	Semi-fixed V.R. 2 K ohm	1
R-C 9155	Electrolytic Capacitor, 500 μF, 25 WV C 103	1
R-C 9127a	Electrolytic Capacitor, 500 μF, 15 WV C 102	1
R-C 9162	Electrolytic Capacitor, 500 μF, 10 WV C 101	1
R-C 9137	Electrolytic Capacitor, 30 μF, 6 WV C 3, 6, 8, 53, 56, 58	6
R-C 9833	Electrolytic Capacitor, 5 μF, 15 WV C 7, 57	2
R-C 9131	Electrolytic Capacitor, 5 μF, 6 WV C 1,2,4,5,51,52,54,55	8
R-S 4827	Spring switch-S 2	1
R-S 1202 (2)	P.L. 6 V, 30 mA-program indicating	4
R-S 3063	Lug-earth	1
R-S 2802	Socket DIN type	1
R-S 2832	Socket RCA type	1
R-S 1033	Plug RCA type	2
R-S 3008	Lug-cord fixer	4
R-35272	Power cord fixer (230 V set B, D only)	1
2 SB 400 A	Transistor Tr. 1-1, Tr. 2-1	2
2 SB 303 B	Transistor Tr. 1-3, Tr. 2-3	2
2 SB 303	Transistor Tr. 1-2, Tr. 2-2	2
R-S 1832	Diode IS559	1
R-S 1805	Silicon rectifier, SD-1 Y-AC power	2
R-S 1076 a	Plug England type 3 pin (A (230V set only))	1
	3 wire cord (A (230V set only))	1
	Cushion (A (230V set only))	1
	Plug Australia type 3 pin (A (230V set only))	1
R-1817	—Plug Siemens type 2 pin (B (230V set only))	1
	—2 wire cord (B (230V set only))	1
R-S 1076 a	Plug England type 3 pin (C (230V set only))	1
	—3 wire cord (C (230V set only))	1
	—Plug Photex tyep (C (230V set only))	1
R-S 3134	2 wire cord 6A 250V (D (230V set only))	1
R-S 8574b	Adaptor complete Seimens type (D (230V set only))	1
R-S 8575b	Adaptor complete England type (D (230V set only))	1
R-S 3142	2 wire cord 6A 250V (117V set only)	1
R-S 3147	Terminals (117V set only)	1

MOUNTING PARTS

Description	Q'ty
Spring washer 3	8
Hexagon nut (1), 3	4
Hexagon nut (3), 3	4
Bolt nut washer 3.3×10×1t	4
Disk head screw 3×20	4
Spring washer 3	6
Bolt nut washer 3.3×10×1t	4
Pan head screw 3×8	6