SANYO

Sanyo Sounds Exciting!

Radio/Cassette Recorder

MODEL MR-412W MR-412F

SERVICE MANUAL

SANYO ELECTRIC CO., LTD.

INTERNATIONAL DIVISION : SANYO ELECTRIC TRADING CO., LTD.
OSAKA, JAPAN

SPECIFICATIONS

	MR-412W	MR-412F
Recording system	AC bias 2 track	AC bias 2 track
Erasing systen	AC erasing 2 track	AC erasing 2 track
Tape speed	1-7/8 ips. only	1-7/8 ips. only
Wow & flutter	0.35% RMS	0.35% RMS
Forward & rewind time	Less than 1'45" (C-60 cassette)	Less than 1'45" (C-60 cassette)
Output power	Undistorted 1 W	Undistorted 1 W
Frequency response	150~6000 Hz	150~6000 Hz
Signal-to-noise ratio	40 db	40 db
Erase rate	Better than 55 db	Better than 55 db
Cross talk	Better than 60 db	Better than 60 db
Frequency range	MW 530 - 1605 KHz SW 3.2- 12.0 MHz	AM 535 - 1605 KHz FM 88 - 108 MHz
Intermediate frequency	MW, SW 455 KHz	AM 455 KHz FM 10.7 MHz
Sensitivity (for 50mW output)	MW 75μV/m SW 9μV	AM 75μV/m FM (30db S/N) 7μV
Transistors	2SB400 × 1 1st audio amp 2SB186 × 4 audio and driver 2SB185 × 1 audio amp 2SB405 × 2 power amp 2SB22 × 1 AC bias oscillator 2SA203 × 2 ALC and IF amp 2SA222 × 1 Converter 2SA202 × 1 IF amp	2SB400 × 1 1st audio amp 2SB186 × 5 audio and driver 2SB405 × 2 power amp 2SB22 × 1 AC bias oscillator 2SA203 × 1 ALC 2SC668 ×1 RF amp 2SC772 × 1 FM converter 2SA101 × 1 AM converter 2SC545 × 3 IF amp
Diodes	1S188 × 3 ALC, Detector DS-18 × 1 Rectifier	1S188 × 7 ALC, AM AGC. FM AGC, AM Det, FM Det 1S553 × 1 FM AFC 1S994-S × 1 DS-18 × 1 Rectifier
Thermistor	SDT-06 × 1	SDT-06 × 1
Input jack	MIC 200 ohm AUX 150k ohm	MIC 200 ohm AUX 150k ohm
Output jack	Ext SP 8 ohm	Ext SP 8 ohm
Power source	AC 120, 240 V or DC 7.5 V	AC 120, 240 V or DC 7.5 V
Accessories	Microphone (w/stand), Cassette, Accessory bag	Microphone (w/stand), Cassette, Accessory bag.

DISASSEMBLY INSTRUCTION

To remove the amplifier and mechanism from the cabinet.

1. Pullout the Tone and Volume control knobs, and remove "T" control lever knob by turning counter-clokwise.
2. Remove the four phillips-head screw holding the bottom lid (Fig. 1)
3. Remove the four red phillips-head screw and the stud nut on the chassis.
4. Disconnect speaker and antenna lead wires.

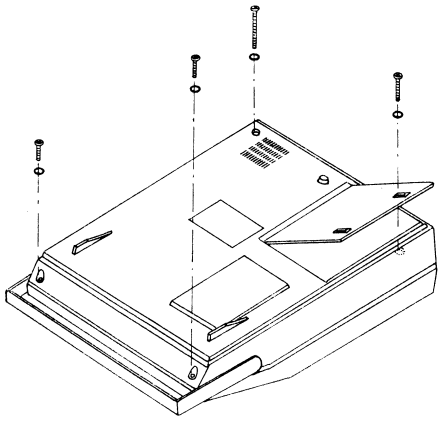

Fig 1

MECHANICAL ADJUSTMENT

To measure the torque of the tape recorder, a torque gauge (Fig. 2) and a tension gauge are necceassry. To use a tension gauge, make a hole in the side of the Cassette as shown in Fig. 3. Be careful that the tape does not rub against the edge of the Cassette; these will make correct measurement impossible.

1. Take-up torque (measure with torque gauge)
   - Play .....40 - 60 gr/cm
   - Fast forward .....60 - 120 gr/cm
   - Rewind .....60 - 120 gr/cm
2. Back tension (measure with tension gauge)
   - Play .....2 - 15 gr/cm
   - Fast forward .....2 - 15 gr/cm
   - Rewind .....2 - 15 gr/cm
3. Tape tension

   As shown in Fig. 4 cut off a length of tape. Tie one end to a thread connected to the tension gauge, and leave the other end hanging loose. Shift the "T" control lever to PLAY and hold the tension gauge steady (do not move it to the left or right). When the tape stops. read the tension gauge. If this reading falls within the range of 50 - 200 gr., no adjustment is needed.

   If it does not fall within this range, adjust the pinch roller pressure. This is done by changing the hole position of the coil spring (R-158155). (Fig. 5) Clean the pinch roller (with alcohol only) so that the tape will not slip.

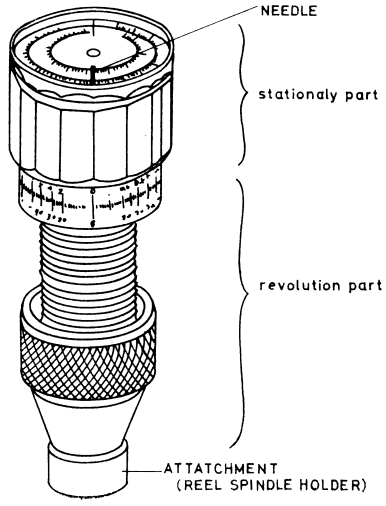

Fig. 2

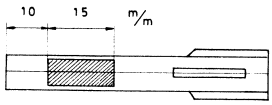

Fig. 3

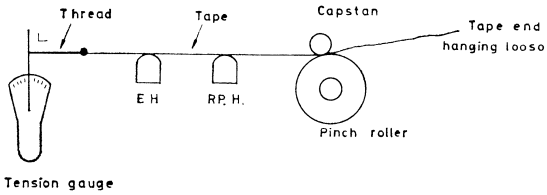

Fig. 4

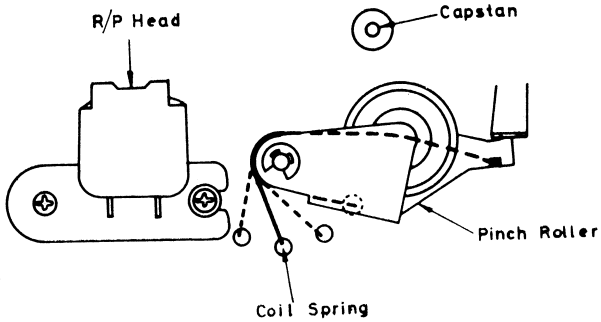

Fig. 5

ELECTRICAL ADJUSTMENT OF TAPE RECORDER

1. Measuring instruments

   In order to test and adjust the electrical parts, the following instruments are required:
   1. Vacuume tube voltage meter
   2. Low frequency oscillator
   3. Attenutor
   4. Destortion meter
   5. Standard tape
2. Oscillation bias current

   Bias current during the recording is measured at both ends of R (10 ohm). Adjustment is made by semi-fixed VR (100k ohm) so that the voltage will be measured 4mV.

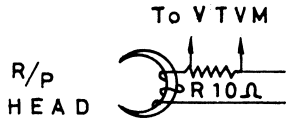

Fig. 6

3. Frequency response

Frequency	150 Hz	1000 Hz	6000 Hz
Tape speed 1-7/8 ips.	+6 ~ −6db	0 db	+6 ~ −6db

Recording: Feed a −76db signal to the Mic. input. (Odb=1V)

Playback: Measure the voltage from the Ext.SP jack (with 8 ohm dummy load) with the VTVM. VR is max. (Tone is high)

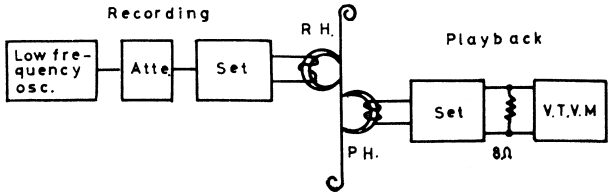

Fig. 7

4. Undistorted output.....more than 1W
   Recording : Feed a −76db signal (1000 Hz) to the Mic. input jack.
   Playback : Measuring point is Ext. SP jack (with 8 ohm dummy load).
   Distortion level of output power should be 10% when the VR is turned. Tone is high.
5. Distortion. .....less than 3%
   Recording : Feed a −76db signal (1000 Hz) to the Mic. input jack.
   Playback : Measuring point is Ext. SP jack (with 8 ohm dummy load). Turn the VR to 10db lower than the maximum output power. Tone is high.
6. Signal to noise ratio .....more than 40db
   Recording : Feed a −76db signal (1000 Hz) to the Mic. input jack.
   Playback : Measuring point is Ext. SP jack (with 8 ohm dummy load). Turn the VR to 10db lower than the maximum output power. Tone is high.
7. Erase rate .....more than 55db
   Recording : Feed a −56 db signal (1000 Hz) to the Mic. input jack.
   Playback : Measuring point is Ext. SP jack (with 8 ohm dummy load). Turn the VR to 10 db lower than the maximum output power. Tone is high.
8. Cross talk.....more than 60 db
   Recording : Feed a −56 db signal (1000 Hz) to the Mic. input jack.
   Playback : Measuring point is Ext. SP jack (with 8 ohm dummy lord). Turn the VR to 10 db lower than the maximum output power. Tone is high.

ELECTRICAL ADJUSTMENT OF TUNER (MR-412W)

IF ALIGNMENT

Preparation : Set for BC reception, loudest volume (tone high).

1. Set the dial to the lowest frequency (largest VC) of the BC band.
2. Adjust the semi-fixed VR 100K ohm so that both edges of Tr-3 emitter resistance R12 (820 ohm) are 0.45V.
3. Feed an intermediate frequency (455K Hz) signal from a signal generator and adjust the intermediate frequency transformer (T1, T2 and T3) to achieve maximum output power.

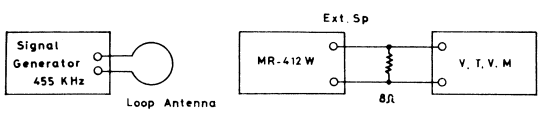

Fig. 8

BROADCAST RF ALIGNMENT

Preparation : *Place a ferrite antenna with its center 60cm away from the center of the loop antenna.
*Set for BC reception, loudest volume (tone high).

1. Set the dial to the lowest frequency (largest VC) of the BC band.
2. Adjust the BC oscillation coil L4 to obtain a 520K Hz (515 - 525K Hz) low cover frequency.
3. Set the dial to the highest frequency (amallest VC) of the broadcast band.
4. Adjust the BC oscillation side trimmer to obtain a 1680K Hz (1650 - 1700K Hz) high cover frequency.
   Repeat steps 2 and 4; adjust until the cover frequencies are within the above ranges.
5. Adjust the BC ANT coil to obtain a 600K Hz low tracking point.
6. Adjust the BC ANT side trimmer to obtain 1400K Hz high tracking point. Repeat steps 5 and 6; adjust so that all tracking point errors are eliminated. Use adjusting rod for tracking conformation.

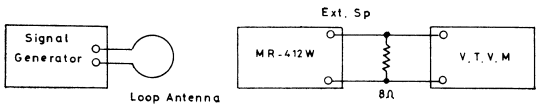

Fig. 9

SHORT WAVE RF ALIGNMENT

Preparation: Set for SW reception, loudest volume (tone high).

1. Set the dial to the lowest frequency (largest VC) of the SW band.
2. Adjust the SW oscillation coil L3 to obtain a 3.1M Hz (3.04 - 3.16M Hz) low cover frequency.
3. Set the dial to the highest frequency (amallest VC) of the SW band.
4. Adjust the SW oscillation side trimmer to obtain a 12.4M Hz (12.8 - 12.1M Hz) high cover frequency.
   Repeat steps 2 and 4; adjust until the cover frequencies are within the above zones.
5. Adjust the SW ANT coil L1 to obtain a 3.5M Hz low tracking point.
6. Adjust the SW ANT side trimmer to obtain an 11.8M Hz high tracking point. Repeat steps 5 and 6; adjust so that all tracking point errors are eliminated.

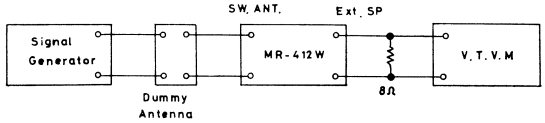

Fig. 10

ELECTRICAL ADJUSTMENT OF TUNER (MR-412F)

AM IF ALIGNMENT

Preparation: Set for AM reception, tone high.

1. Set the dial to the lowest frequency (largest VC) of the AM band.
2. Adjust the semi-fixed volume SVR-101 to achieve a reading of 0.45V from either the Tr-102 emitter resistance R102 (680 ohm) or between J106 and J110
3. Feed an intermediate frequency 455K Hz signal from a signal generator and adjust the intermediate frequency transformer, T105, T106 and T107 for maximum output power of model MR-412F.

NOTE

1. Signal generator output power is 100 - 110 dB.
2. Always control the volume to keep the output power of the set between 120mV and 210mV (8 ohm, voltage between terminals 1.0 - 1.3V).

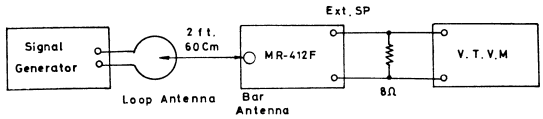

Fig. 11

BROADCAST RF ALIGNMENT

Preparation: Set for AM reception, loudest volume, tone high.

1. Set the dial to the lowest frequency (largest VC) of the AM band.
2. Adjust oscillation coil L7 and L8 to obtain a 515K Hz low cover frequency (510 - 520K Hz).
3. Set the dial to the highest frequency (smallest VC) of the AM band.
4. Adjust the oscillation side trimmer Ct-4 to obtain a 1650K Hz high cover frequency (1640 - 1660K Hz).
   Repeat steps 2 and 4; adjust until the cover frequencies are within the above ranges.
5. Adjust the AM ANT coil L5, L6 to obtain a 600K Hz low tracking point.
6. Adjust the AM ANT side trimmer to obtain 1400K Hz high tracking point.
   Repeat steps 5 and 6; adjust so that all tracking point errors are eliminated.
   Use an adjusting rod for tracking confirmation.

Specifications

Low cover frequency: less than 535K Hz.
High cover frequency: more than 1605K Hz.
Sensitivity at 600K Hz less than 69 dB.
Sensitivity at 1400K Hz less than 69 dB.
Sensitivity at 1000K Hz less than 69 dB.
Tracking aberration output power less than 6 dB.

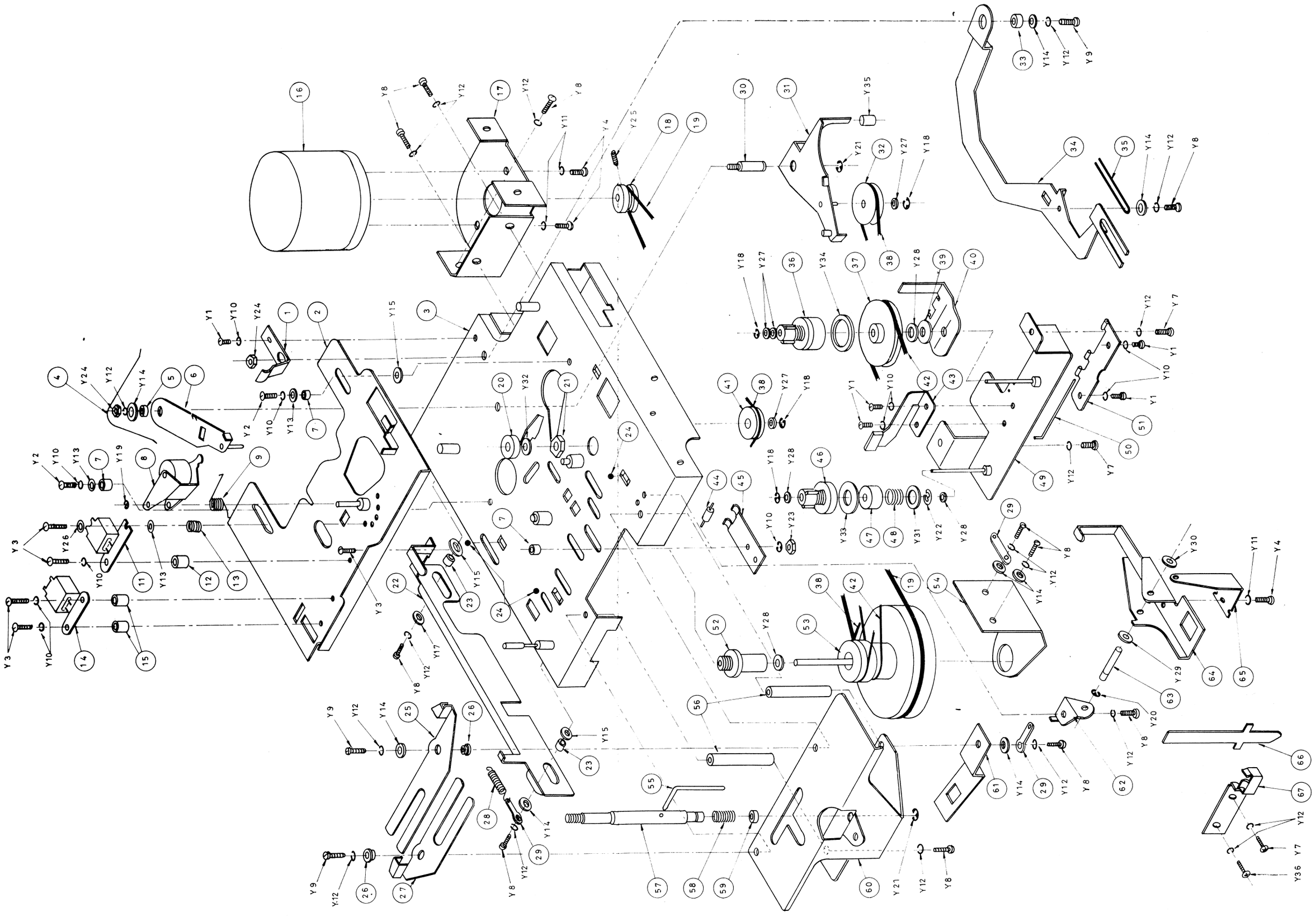

WM-8 February69 3000 Printed in Japan

SCHEMATIC DIAGRAM (MR-412F)

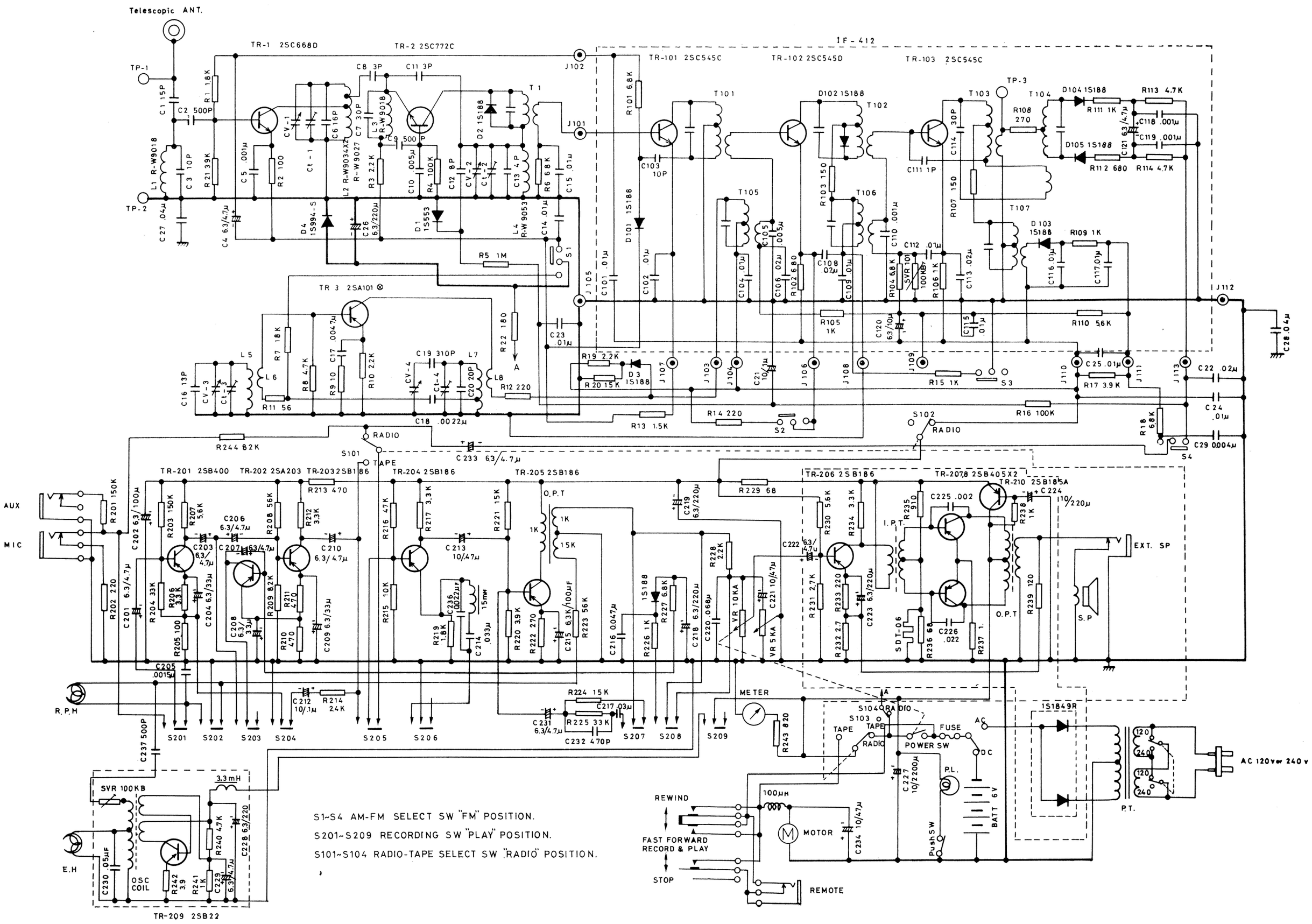

WIRING DIAGAM (MR-412F)

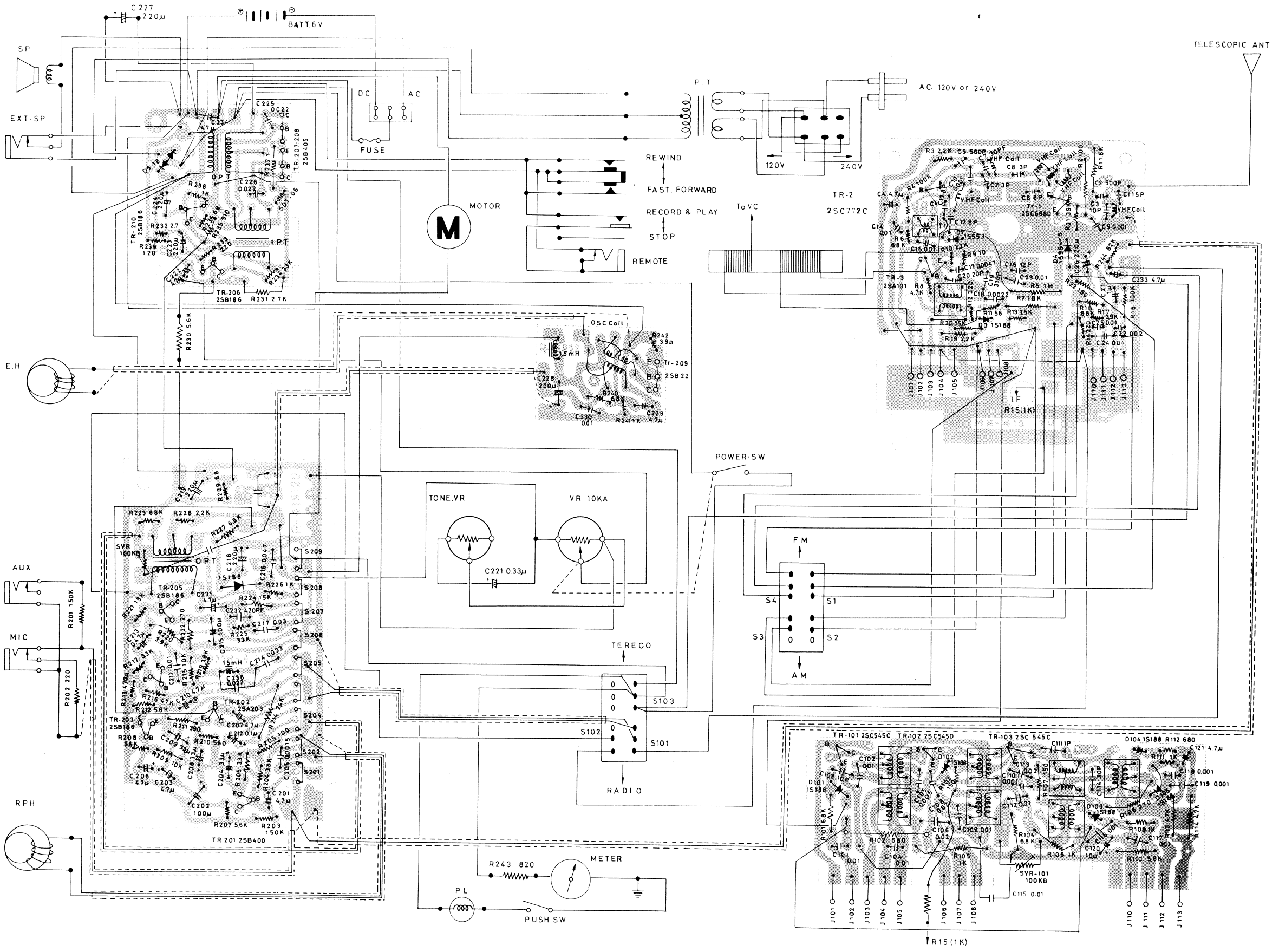

WIRING DIAGRAM (MR-412W)

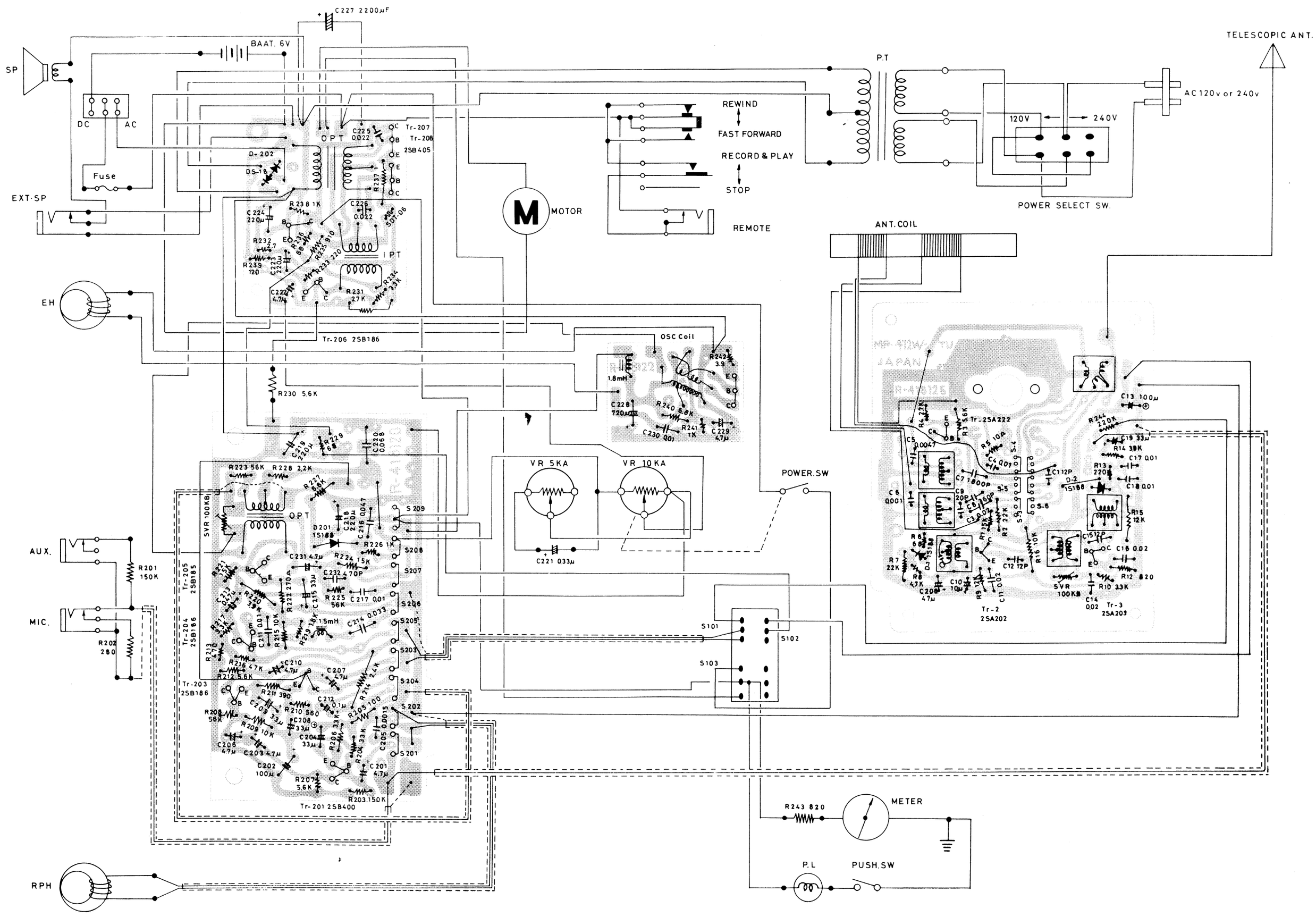

PRATS LIST (MR-412W,F)

Key No.	Parts No.	Description	Q'ty
MECHANISM			
56	R-148288	Shaft for operation lever bracket	2
57	R-148287a	Operation lever	1
58	R-158237	Coil spring for operation lever	1
59	R-448112a	Cushion for operation lever	1
60	R-119084	Bracket for operation lever	1
61	R-128200	Plate spring for operation lever	1
62	R-119078	Bracket for cassette-up lever	1
63	R-148285	Shaft for cassette-up lever	1
64	R-119076a	Lever for cassette-up	1
65	R-119077a	Bracket for cassette-up lever	1
66	R-119079	Lever for cassette-up	1
67	R-258096	Plate spring for cassette-up lever	1
	R-S4846	Spring switch	1
	R-S4848	Spring switch for Rew or Fwd changing	1
Y1	R-Y012004	Pan head screw 2ø × 4	3
Y2	R-Y012006	〃 2ø × 6	2
Y3	R-Y012010	〃 2ø × 10	5
Y4	R-Y012604	〃 2.6ø × 4	3
Y5	R-Y012606	〃 2.6ø × 6	1
Y6	R-Y012610	〃 2.6ø × 10	2
Y7	R-Y013004	〃 3ø × 4	3
Y8	R-Y013006	〃 3ø × 6	11
Y9	R-Y013008	〃 3ø × 8	3
Y10	R-Y332000	Spring washer 2ø	14
Y11	R-Y332600	〃 2.6ø	6

Key No.	Parts No.	Description	Q'ty
MECHANISM			
Y12	R-Y333000	Spring washer 3ø	17
Y13	R-Y312000	Small screw washer 2ø	4
Y14	R-Y32330805	Hexagon nut washer 3.3ø × 8ø × 0.5t	6
Y15	R-Y32330810	〃 3.3ø × 8ø × 1t	3
Y16	R-Y32301005	〃 3ø × 10ø × 0.5t	2
Y17	R-Y32300805	〃 3ø × 8ø × 0.5t	1
Y18	R-Y271500	External "E" ring 1.5ø	3
Y19	R-Y271900	〃 1.9ø	1
Y20	R-Y272000	〃 2ø	1
Y21	R-Y273000	〃 3ø	2
Y22	R-Y274000	〃 4ø	1
Y23	R-Y2320001	Nut 2ø	1
Y24	R-Y2330001	〃 3ø	2
Y25	R-Y102004	Stopper 2ø × 4	1
Y26	R-Y3426000	Internal tooth lock washer 2.6ø	1
Y27	R-Y542000A	Plastic washer 2ø × 4ø × 0.25t	3
Y28	R-Y54200B	〃 2ø × 4ø × 0.5t	2
Y29	R-Y54300B	〃 3.1ø × 5.4ø × 0.5t	1
Y30	R-YF3710020	Fiber washer 3.7ø × 10ø × 2t	1
Y31	R-YF5213010	〃 5.2ø × 13ø × 1t	1
Y32	R-H10201	Felt washer 2ø × 6.5ø × 1t	1
Y33	R-H10205	〃 6ø × 14ø × 1t	1
Y34	R-H10204	〃 8ø × 14ø × 1t	1
Y35	R-H10202	Tube 5ø × 8	1
Y36	R-Y113004B	Self tapping screw 3ø × 4	1

MEASURE DATA

MR-412F AUDIO AMP. Section

Transistor	PLAYBACK			RECORDING		
	Base	Emitter	Collector	Base	Emitter	Collector
Tr-201 2SB400	−0.90 [V]	−0.80 [V]	−3.30 [V]	−0.80 [V]	−0.77 [V]	−3.20 [V]
Tr-202 2SA203	−0.30 [V]	−0.30 [V]	−0.30 [V]	−0.40 [V]	−0.33 [V]	−0.30 [V]
Tr-203 2SB186	−0.70 [V]	−0.55 [V]	−1.25 [V]	−0.65 [V]	−0.53 [V]	−1.20 [V]
Tr-204 2SB186	−0.89 [V]	−0.75 [V]	−3.65 [V]	−0.85 [V]	−0.75 [V]	−3.60 [V]
Tr-205 2SB185	−0.92 [V]	−0.75 [V]	−4.76 [V]	−0.91 [V]	−0.75 [V]	−4.71 [V]
Tr-206 2SB186	−1.60 [V]	−1.42 [V]	−4.90 [V]	−1.60 [V]	−1.40 [V]	−4.90 [V]
Tr-207 2SB405	0 [V]	0 [V]	−6.00 [V]	0 [V]	0 [V]	−5.80 [V]
Tr-208 2SB405	0 [V]	0 [V]	−6.00 [V]	0 [V]	0 [V]	−5.80 [V]
Tr-209 2SB22	———	———	———	+0.80 [V]	−0.22 [V]	−5.60 [V]
Tr-210 2SB186	−5.60 [V]	−5.40 [V]	−6.00 [V]	−5.50 [V]	−5.25 [V]	−5.80 [V]

MR-412F TUNER Section

Transistor	FM			AM		
	Base	Emitter	Collector	Base	Emitter	Collector
Tr-1 2SC668D	−4.00 [V]	−0.48 [V]	0 [V]	———	———	———
Tr-2 2SC772C	−0.15 [V]	−0.48 [V]	0 [V]	———	———	———
Tr-3 2SA101	———	———	———	−0.85 [V]	−0.82 [V]	−4.85 [V]
Tr-101 2SC545C	−2.50 [V]	−3.10 [V]	0 [V]	———	———	———
Tr-102 2SC545D	−3.65 [V]	−4.30 [V]	−0.3 [V]	−4.15 [V]	−4.75 [V]	−0.1 [V]
Tr-103 2SC545C	−2.60 [V]	−3.25 [V]	−0.21 [V]	−3.00 [V]	−3.70 [V]	−0.23 [V]

SCHEMATIC DIAGRAM (MR-412W)

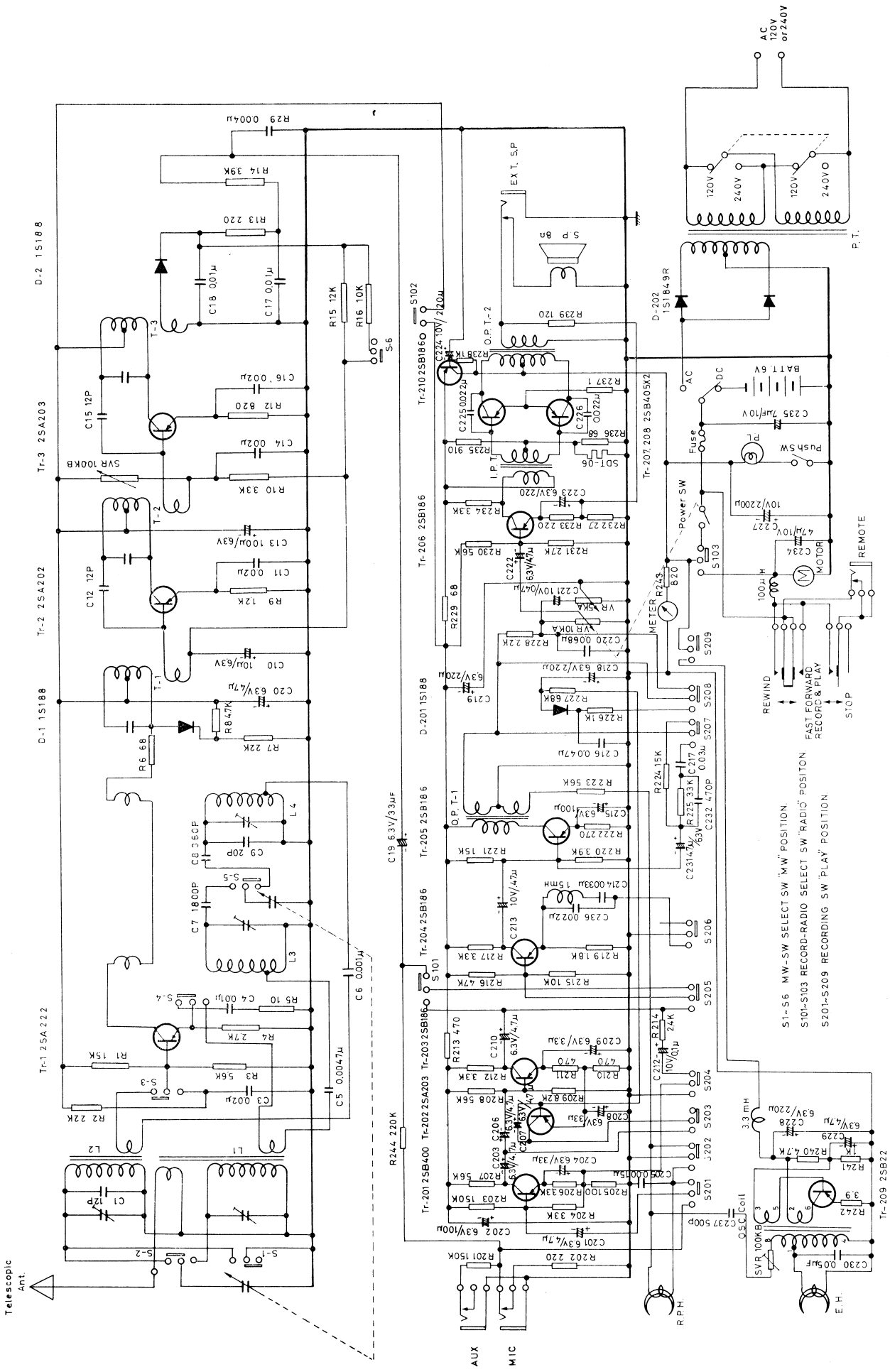

PARTS LIST (MR-412F)

Parts No.	Description	Q'ty
CHASSIS - RADIO Section		
R-418168a	Printed circuit board (Radio)	1
R-119071	Bracket for volume	1
R-32191a	Antenna holder	1
R-AT21006	Back plate assembly	1
R-119489	Bracket for tuning knob	1
R-119490	Bracket for tuning knob	1
R-248409	Shaft for tuning knob	1
R-328125a	Knob for tuning	1
R-39447	Drum for VC	1
R-44045	Cushion for VC	1
R-44065	Cushion for VC	1
R-S7089	Nut for tuning shaft	1
R-S7083	Special screw for drum	1
	Dial cord 0.5ø × 1200mm	1
R-15041	Coil spring for dial cord	1
R-398157	Mounting base for push switch	1
	Felt 5 × 15 for antenna	1
R-S3063	Lug for cord fixer	1
	Fiber washer 2.1ø × 5ø × 0.5t	1

Key No.	Parts No.	Description	Q'ty
ELECTRICAL PARTS			
	R-W1819	Choke coil 15mH	1
	R-W1808	Choke coil 3.3mH	1
	R-W1048	Choke coil 100μH for motor	1
OPT-1	R-W6839	Output transformer	1
OPT-2	R-W6840	Output transformer	1
	R-W6841	Input transformer	1
	R-W8818	Oscillator coil	1
	R-S6973	Speaker	1
	R-W7872	Power transformer	1
	R-R124853	Variable resistor 10K ohm A type	1
	R-R124803	Variable resistor 5K ohm A type	1
	R-R11011	Semi-fixed VR 100K ohm B type	1
	R-S5812	Battery life meter	1
	R-S6888	Microphone	1
	R-R7026	Special resistor 1 ohm 1/4W	1
	R-S4877	Slide switch for R/P changing	1
	R-S2866	Socket for AUX, MIC, EXT SP, REMOTE	1
	R-S88312	Cassette	1
	R-S1858	Telescopic antenna	1
	R-S4266	Slide switch AC-DC, voltage	2
	R-S398050	Microphone stand	1
	R-S1038	Fuse holder	1
	R-S1090	Fuse 1.2A	1
	R-S12011	Lug	2
	R-S3008	Lug	1
	R-S3018	Lug	1
	R-261193a	Heat sink	1
Tr-201		Transistor 2SB400	1
Tr-203-Tr-204 Tr-205-		Transistor 2SB186	3
Tr-206		Transistor 2SB186	1
Tr-210		Transistor 2SB186	1
Tr-207-Tr-208-		Transistor 2SB405	2
Tr-209		Transistor 2SB22	1
Tr-202		Transistor 2SA203	1
		Diode ALC 1S188	1
		Thermistor SDT-06	1
		Rectifier 1S1849R	1
		(AC cord is shosen among following A,B,C & D)	
	R-S1076a	Plug, English-type 3-pin —	1
		3-wired cord	1
	R-S1245	Plug, Australia-type 3-pin A	1
	R-S3823	Terminal 3-pin —	1
	R-S3818	AC power cord —	1
	R-S1817	Plug, Siemens-type 2-pin B	1
	R-S3824	Terminal 2-pin —	1
		3-Wired cord —	1
	R-S1076a	Plug, Photex-type, 3-pin C	1
	R-S3823	Terminal 3-pin —	1
	R-S3812	AC power cord —	1
	R-S8574b	AC adaptor, Siemens-type 2-pin D	1
	R-S8575b	AC adaptor, English-type 2-pin	1
	R-S3824	Terminal —	1

Key No.	Parts No.	Description	Q'ty
ELECTRICAL PARTS - RADIO Section			
L1,L3	R-W9018	VHF coil	2
L2	R-W9034	VHF coil	2
L2	R-W9027	VHF coil	1
L4	R-W9053	VHF coil	1
	R-C1801	Variable capacitor	1
T1	R-W5T168	IFT	1
L5,L6	R-W2801	Antenna coil	1
L7,L8	R-W8206	Oscillator coil	1
	R-113143	Shield case for IF-412	1
	R-S4861A	Slide switch for radio-tape, AM-FM	2
	R-S3018	Lug	2
	R-25239a	Spring for VC earth	1
	R-S4206	Push switch for pilot lamp	1
	R-S1202	Pilot lamp	1
	R-23676	Lug	1
	R-3008	Lug	1
Tr-1		Transistor 2SC668	1
Tr-2		Transistor 2SC772	1
Tr-3		Transistor 2SA101	1
D1		Variable capacity diode 1S553	1
D2,D3		Diode 1S188	2
		Diode 1S994-S	1
	R-S88486	-IF part assembly IF-412	1
	R-418183	-Printed circuit board	1
T101,T102	R-W5T308	-IFT 10.7 MHz	2
T103	R-W5T309	-IFT 10.7 MHz	1
T104	R-W5T310	-IFT 10.7 MHz	1
T105	R-W5T801	-IFT 455 KHz	1
T106	R-W5T802	-IFT 455 KHz	1
T107	R-W5T312	-IFT 455 KHz	1
	R-R11011	-Semi-fixed VR 100K ohm B type	1
C121	R-C9882	-Electrolytic capacitor 4.7μF 6.3V	1
C120	R-C9929	-Electrolytic capacitor 10μF 6.3V	1
Tr-101, Tr-103		-Transistor 2SC545	2
Tr-102		-Transistor 2SC545	1
D104,105		-Diode 1S188 pair	2
D101,102, 103		-Diode 1S188	3
R102,112		-Resistor, carbon P type 〃 680 ohm ±5% 1/4W	2
R106,111		- 〃 1K 〃 〃 〃	2
R103,107		- 〃 150 〃 ±10% 〃	2
R108		- 〃 270 〃 〃 〃	1
R105,109		- 〃 1K 〃 〃 〃	2
R113,114		- 〃 4.7K 〃 〃 〃	2
R110		- 〃 5.6K 〃 〃 〃	1
R101,104		- 〃 6.8K 〃 〃 〃	2
C111		-Capacitor Rutilcon disk type 1pF ±0.5pF50WV	1
C103		- 〃 10pF 〃 〃	1
C114		- 〃 30pF ±10% 〃	1
C110,118 119		- 〃 0.001μF +80 −20% 25WV	3
C105		- 〃 0.005μF 〃 〃	1
C101,102, 104,109, 112,115, 116,117		- 〃 0.01μF 〃 〃	8
C106,108, 113		- 〃 0.02μF 〃 〃	3
RESISTORS			
		Carbon P type	
R201,203		150K ohm ±10% 1/4w	2
R208,223		56K 〃 〃 〃	2
R216		47K 〃 〃 〃	1
R204,225		33K 〃 〃 〃	2
R221,224		15K 〃 〃 〃	2
R215		10K 〃 〃 〃	1
R209		8.2K 〃 〃 〃	1
R227		6.8K 〃 〃 〃	1
R207,230		5.6K 〃 〃 〃	2
R240		4.7K 〃 〃 〃	1
R220		3.9K 〃 〃 〃	1
R206,217, 234,212		3.3K 〃 〃 〃	4
R231		2.7K 〃 〃 〃	1
R214		2.4K 〃 〃 〃	1
R228		2.2K 〃 〃 〃	1

PARTS LIST (MR-412F)

Key No.	Parts. No.	Description	Q'ty
RESISTORS			
		Carbon P type	
R219		1.8K ohm ±10% 1/4w	1
R226,238 241		1K ″ ″ ″	3
R235		910 ″ ″ ″	1
R243		820 ″ ″ ″	1
R213,211, 210		470 ″ ″ ″	3
R222		270 ″ ″ ″	1
R202,233		220 ″ ″ ″	2
R239		120 ″ ″ ″	1
R205		100 ″ ″ ″	1
R229,236		68 ″ ″ ″	2
R242		3.9 ″ ″ ″	1
R232		2.7 ″ ″ ″	1
R244		82K ″ ″ ″	1
R5		1M ″ ″ ″	1
R1		1.8K ″ ″ ″	1
R14		220 ″ ″ ″	1
R2		100 ″ ± 5% ″	1
R16,4		100K ″ ±10% ″	2
R20		15K ″ ″ ″	1
R18		6.8K ″ ″ ″	1
R8		4.7K ″ ″ ″	1
R17		3.9K ″ ″ ″	1
R15		1K ″ ″ ″	1
R12		220 ″ ″ ″	1
R11		56 ″ ″ ″	1
R3,10,19		2.2K ″ ± 5% ″	3
R13		1.5K ″ ″ ″	1
R9		10 ″ ″ ″	1
R22		180 ″ ±10% ″	1
R6		68K ″ ″ ″	1
R7		18K ″ ″ ″	1
R21		39K ″ ″ ″	1
CAPACITORS			
C227	R-C9930	Electrolytic capacitor 2200μF 10V	1
C218,219 223,228	R-C9864	″ 220μF 6.3V	4
C202,215	R-C9880	″ 100μF ″	2
C204,209 208	R-C9881	″ 33uF ″	3
C229,207, 201,206, 203,222, 210,231	R-C9882	″ 4.7μF ″	8
C212	R-C9126	″ 0.1μF 10V	1
C224	R-C9879	″ 220μF ″	1
C213,221	R-C9898	″ 0.47μF ″	2
C234	R-C9903	″ 47μF ″	1
C26	R-C9864	″ 220μF 6.3V	1
	R-C9875	″ 220μF ″	
C4,233	R-C9882	″ 4.7μF ″	2
C21	R-C9160	″ 1μF 10V	1
C220		Mylar square type 0.068μF ±20% 25WV	1
C216		″ 0.047μF ″ ″	1
C214		″ 0.033μF ±10% ″	1
C225,226, 236		″ 0.022μF ±20% ″	3
C205		″ 0.0015μF ±10% ″	1
C232		″ 470pF ±20% ″	1
C217		″ 0.03μF ″ ″	1
C230		″ 0.05μF ±10% 50WV	1
C237		″ 500pF ±20% 25WV	1
		Ceramic square type 500pF ±20% 25WV	
C2,9		″ 500pF ″ 50WV	2
C7		″ 30pF ±10% ″	1
C20		″ 20pF ″ ″	1
C6		″ 16pF ″ ″	1
C1		″ 15pF ″ ″	1
C16		″ 13pF ″ ″	1
C3		″ 10pF ±0.5pF ″	1
C12		″ 8pF ±10% ″	1
C13		″ 4pF ±0.5pF ″	1
C8,11		″ 3pF ″ ″	2
C14,15,23		″ 0.01μF +80 −20% ″	3
C10		″ 0.005μF ″ ″	1

PRATS LIST (MR-412F)

Kee. No.	Parts No.	Description	Q'ty
CAPACITORS			
		Mylar square type	
C5		0.001μF +80 −20%	1
C22		″ 0.02μF +30 −20% ″	1
C25		″ 0.01μF ″ ″	1
C17		″ 0.0047μF ″ ″	1
C18		″ 0.0022μF ″ ″	1
C29		″ 0.004μF ±20% 25-50WV	1
C24		Rutilcon disk type 0.01μF +80 −20% ″	1
C19		Styrol 310pF ±5% ″	1

PARTS LIST (MR412W,F)

MECHANISM			
1	R-258050	Plate spring for cassette-up mtg.	1
2	R-S88489	Slide assembly for head mtg.	1
3	R-AM10201	-Mechanism chassis assembly	1
	R-119083	-Mechanism chassis	1
	R-248372	-Guide for cassette holding	2
	R-148193	-Guide for cassette	2
	R-148206	-Shaft, R/P switch change spring lock	1
	R-118725	-Bracket, R/P switch change lever	1
	R-Y272004	-Rivet 2ø × 4, round head	2
4	R-128118	Spring for FWD lever	1
5	R-24670	Spacer for FWD lever	1
6	R-S88291a	Lever assembly for FWD	1
7	R-248233	Spacer for head mtg. slide	3
8	R-S88293	Pinch roller & lever assembly	1
9	R-158155	Coil spring for pinch lever	1
11	R-S6939	Record/playback head	1
12	R-248395	Spacer for R/P head mtg.	1
13	R-158154	Coil spring for R/P head mtg.	1
14	R-S6859 or R-S6930	Erase head	1
15	R-248380a	Spacer for erase head mtg.	2
16	R-S5175	DC motor	1
17	R-118732	Bracket for motor	1
18	R-278103	Motor pulley	1
19	R-448040a	Drive belt	1
20	R-238020	Cap for flywheel bearing	1
21	R-248243	Nut for flywheel bearing	1
22	R-119089	Slide for anti-recording	1
23	R-24670	Spacer for anti-recording	2
24	R-Y553200	Steel ball for head mtg. slide	3
25	R-119086	Lever for head mtg. slide	1
26	R-248320	Spacer, lever	2
27	R-119085	Lever for head mtg. slide	1
28	R-158239	Coil spring for return anti-rec. slide	1
29	R-S3008	Lug	3
30	R-148199	Shaft for FWD lever	1
31	R-S88490	Lever assembly for REW.,FWD activation	1
32	R-398076	Pulley for rewind	1
33	R-24697	Spacer for REW.,FWD activation lever	1
34	R-119088	Lever for REW.,FWD activation	1
35	R-158205a	Spring for REW.,FWD activation	1
36	R-S88284	Reel spindle for right assembly	1
37	R-398078	Pulley for take-up	1
38	R-448060a	Belt for REW & FWD	1
39	R-258051	Washer for right spindle shaft	1
40	R-258053	Plate spring for press-up	1
41	R-398077	Pulley for FWD activation	1
42	R-448059	Belt for winding	1
43	R-AM10202	-Backtension plate spring assembly	1
	R-258049	-Plate spring	1
	R-H10203	-Felt 3 × 7 × 1t	1
44	R-S88283	Roller assembly for stepper	1
45	R-258052a	Plate spring for stepper	1
46	R-S88295	Reel spindle assembly, left	1
47	R-398079	Pulley for supply spindle under	1
48	R-158152	Coil spring for supply spindle clutch	1
49	R-S88294	Bracket assembly for reel shaft	1
50	R-128099a	Shaft for hinge	1
51	R-238027	Hinge for feed shaft press-up spring mtg.	1
52	R-S88286	Bearing for flywheel	1
53	R-S88281	Flywheel assembly	1
54	R-S88289	Suporting bracket for flywheel	1
55	R-14115	Bar for operation lever	1

PARTS LIST (MR-412W)

Key. No.	Partrs No.	Description	Q'ty
CAPACITORS			
		Mylar square type	
C237		〃 500pF ±20%25WV	1
		Ceramic square or disk type	
		500pF ±20% 〃	
C3,11,14, 16		〃 0.02μF +80 −20% 25 - 50WV	4
C9		〃 20pF ±10% 〃	1
C1 12,15		〃 12pF ±10% 〃	3
C29		Myler square type	
		0.004μF ±20% 〃	1
C4,17,18		〃 0.01μF ±10% 50WV	3
C5		〃 0.0047μF ±10% 〃	1
C6		〃 0.001μF ±10% 〃	1
C7		Styrol 1800pF ±5%25-50WV	1
C8		〃 360pF ±5% 〃	1

PARTS LIST (MR-412F)

Parts No.	Description	Q'ty
PACKING		
R-498620	Individual carton	1
R-418172	Cushion - Foam	1
R-418173	Cushion - Foam	1
R-498550	Filler	1
R-478366	Instruction booklet	1
	Polyetylene bag for set (360 × 550H)	1
R-36195	Accessory case	1
	Polyetylene bag for AC cord, Mic. (120 × 270H)	1
	Polyetylene bag for Cassette (100 × 200H)	1
R-471099a	Caution card	1
	(Below parts are used when the AC power cord marked A or C.)	
	Polyetylene bag for plug (50 × 90H)	1
	Polyetylene bag for 3 wire cord (120 × 280H)	1
CABINET		
R-AT22601	-Cabinet assembly	1
R-318194	-Cabinet (plastic only)	1
R-278153	-Stud nut for cabinet botton	2
R-328098	-Decoration fram for cabinet	1
R-398123	-Plastic plate for hide hole of cabinet	1
R-398135	-Dial scale	1
R-268529	-Metal sash for cabinet	1
R-268530	-Metal sash for cabinet	1
R-268531	-Metal sash for cabinet	1
R-268532	-Panel of control	1
R-268533	-Metal sash for cabinet	1
R-268534	-Metal sash for cabinet side	1
R-268535	-Metal sash for cabinet side	1
R-318203	-Plastic plate	1
R-268539	-Badge	1
R-398158	-Speaker net	1
R-268304a	-Aluminum plate for deck panel under cassette	1
R-418123	-Cushion	1
	-Hexagon bolt 3 × 8	2
	-Small screw washer 3	2
	-Spring washer 3	2
R-AT22603	-Top lid assembly	1
R-318208	-Lid for top panel	1
R-398124	-Clear window for top lid	1
	-Rubber cushion 5ø × 1t	4
R-S88529	-Shaft assembly for top lid	1
R-S88412	-Shaft assembly for top lid	1

PRATS LIST (MR-412F)

Parts No.	Description	Q'ty
CABINET		
R-AT22602	Cabinet for bottom assembly	1
R-318207	-Bottom cabinet	1
R-268624	-Specification plate	1
R-268632	-Operation guide plate	1
R-23838a	-Battery terminal (+)	4
R-258047	-Battery terminal (−)	4
R-478373	-Circuit diagram sheet	1
	-Cushion 20 × 70 × 10t	1
	-Cushion 15 × 15 × 18	1
R-AT22604	Battery lid	1
R-398125	-Lid for battery compartment	1
	-Sponge cushion 20 × 70 × 10t	1
	-Sponge cushion 20 × 40 × 13t	1
	-Rubber cushion 5ø × 1t	5
R-32501	Knob for battery lid	2
R-128115	Plate spring for battery lid	2
R-119275	Handle	1
	Nylon washer 8.1ø × 12ø × 0.5t	2
	Nylon washer 8.1ø × 12ø × 3t	2
R-248360	Special screw for handle	2
R-119401	Reinforce metal for handle	2
R-438022	Ribbon for battery take-up	1
R-S88430	Knob assembly for VR, Tone	2
R-S88427a	Knob assembly for Operation	1
R-119066	Bracket for terescopic antenna	1
R-S3063	Lug for telescopic antenna	1
R-118562	Bracket for speaker	3
R-113377	Bracket for speaker	1
CHASSIS - RECORDER Section		
R-119067	Chassis for printed circuit board	1
R-418120	Printed circuit board for Pre-amp.	1
R-418121	Printed circuit board for Main-amp.	1
R-4181203	Printed circuit board for OSC	1
R-119068	Slide for R/P switch change	1
R-158231	Coil spring for slide switch	1
R-119069	Bracket for power transformer	1
R-119249	Bracket for AC terminal	1
R-268638	Shield cover for oscillator PCB	1
R-S88528	Shield assembly for oscillator PCB	1
	Sheet 29 × 19 × 0.5t	1
R-118697	Bracket for heat sink	1
R-S88530	Pointer assembly	1
R-398129	Lever for R/P changing	1
R-258081	Plate spring for R/P changing	1
R-119143	Bracket for PCB chassis	1
R-398127	Cloth for switch	2
	Cloth for operation lever	1
R-148333	Stud nut for PT mtg.	1
R-328123	Eject button	1
R-328122	Record button	1
R-258036a	Plate spring for R/P changing lever	1
R-248319	Shaft for record button	1
R-119074	Bracket for cassette-up lever	1
R-119075	Lever for cassette-up	1
R-158234a	Coil spring for cassette-up lever	1
R-248320	Spacer for cassette-up lever	1
R-S3008	Lug	1
R-128101	Spacer for record lever	1
R-119079	Lever for cassette-up	1
R-258096	Plate spring for cassette-up lever	1
	Cloth 9.8ø × 15ø for record button	1
R-368097	Screen for AC power terminal (This part are used when the AC cord maked A or C.)	1
R-368098	Screen for AC power terminal (This part are used when the AC cord marked B or D.)	1
R-118453	Band for electrolytic capacitor	1
R-44045	Cushion for pilot lamp	1
R-158312	Bar for cassette-up	1
CHASSIS - RADIO Section		
R-AT21005	Chassis assembly	1
R-398137	-Chassis for printed circuit board	1
R-27062	-Pulley	1

PARTS LIST (MR-412W)

Parts No.	Description	Q'ty
PACKING		
R-498574	Individual carton	1
R-418172	Cushion - Foam	1
R-418173	Cushion - Foam	1
R-498550	Filler	1
R-478322	Instruction booklet	1
	Polyetylene bag for set (360 × 550H)	1
R-36195	Accessory case	1
	Polyethlene bag for AC cord, Mic. (120 × 270H)	1
	Poleythlene bag for Cassette (100 × 200H)	1
R-471099a	Caution card	1
	(Below parts are used when the AC power cord marked A or C.)	
	Polyethlene bag for plug (50 × 90H)	1
	Polyethlene bag for 3 wira cord (120 × 280H)	1
CABINET		
R-AT21001	-Cabinet assembly	1
R-318194	-Cabinet (plastic only)	1
R-278153	-Stud nut for cabinet botton	2
R-328098	-Decoration fram for cabinet	1
R-328120	-Plastic plate for hide hole of cabinet	1
R-398135	-Dial scale	1
R-268529	-Metal sash for cabinet	1
R-268530	-Metal sash for cabinet	1
R-268531	-Metal sash for cabinet	1
R-268532	-Panel of control	1
R-268533	-Metal sash for cabinet	1
R-268534	-Metal sash for cabinet side	1
R-268535	-Metal sash for cabinet side	1
R-318203	-Plastic plate	1
R-268539	-Badge	1
R-398158	-Speaker net	1
R-268304a	-Aluminum plate for deck panel under cassette	1
R-418123	-Cushicn	1
	-Hexagon bolt 3 × 8	2
	-Small screw washer 3	2
	-Spring washer 3	2
R-AT21003	-Top lid assembly	1
R-318208	-Lid for top panel	1
R-398124	-Clear window for top lid	1
	-Rubber cushion 5ø × 1t	4
R-S88529	-Shaft assembly for top lid	1
R-S88412	-Shaft assembly for top lid	1
R-AT21002	Cabinet for bottom assembly	1
R-318207	-Bottom cabinet	1
R-268580	-Specification plate	1
R-268632	-Operation guide plate	1
R-23838a	-Battery terminal (+)	4
R-258047	-Battery terminal (−)	4
R-478321	-Circuit diagram sheet	1
	-Cushion 20 × 70 × 10t	1
	-Cushion 15 × 15 × 18	1
R-AT21004	Battery lid	1
R-398125	-Lid for battery compartment	1
	-Sponge cushion 20 × 70 × 10t	1
	-Sponge cushion 20 × 40 × 13t	1
	-Rubber cushion 5ø × 1t	5
R-32501	Knob for battery lid	2
R-128115	Plate spring for battery lid	2
R-119275	Handle	1
	Nylon washer 8.1ø × 12ø × 0.5t	2
	Nylon washer 8.1ø × 12ø × 3t	2
R-248360	Special screw for handle	2
R-119401	Reinforce metal for handle	2
R-438022	Ribbon for battery take-up	1
R-S88430	Knob assembly for VR, Tone	2
R-S88427a	Knob assembly for Operation	1
R-119066	Bracket for terescopic antenna	1
R-S3063	Lug for telescopic antenna	1
R-118562	Bracket for speaker	3
R-113377	Bracket for speaker	1
CHASSIS - RECORDER Section		
R-119067	Chassis for printed circuit board	1
R-418120	Printed circuit board for Pre-amp.	1
R-418121	Printed circuit board for Main-amp..	1

Parts No.	Description	Q'ty
CHASSIS-RECORDER Section		
R-4181203	Printed circuit board for OSC	1
R-119068	Slide for R/P switch change	1
R-158231	Coil spring for slide switch	1
R-119069	Bracket for power transformer	1
R-119249	Bracket for AC terminal	1
R-268638	Shield cover for oscillator PCB	1
R-S88528	Shield assembly for oscillator PCB	1
	Sheet 29 × 19 × 0.5t	1
R-118697	Bracket for heat sink	1
R-S88530	Pointer assembly	1
R-398129	Lever for R/P changing	1
R-258081	Plate spring for R/P changing	1
R-119143	Bracket for PCB chassis	1
R-398127	Cloth for switch	2
	Cloth for operation lever	1
R-148333	Stud nut for PT mtg.	1
R-328123	Eject button	1
R-328122	Record button	1
R-258036a	Plate spring for R/P changing lever	1
R-248319	Shaft for record button	1
R-119074	Bracket for cassette-up lever	1
R-119075	Lever for cassette-up	1
R-158234a	Coil spring for cassette-up lever	1
R-248320	Spacer for cassette-up lever	1
R-S3008	Lug	1
R-128101	Spacer for record lever	1
R-119079	Lever for cassette-up	1
R-258096	Plate spring for cassette-up lever	1
	Cloth 9.8ø × 15ø for record button	1
R-368097	Screen for AC power terminal	1
	(This part are used when the AC cord marked A or C.)	
R-368098	Screen for AC power terminal	1
	(This part are used when the AC cord marked B or D.)	
R-118453	Band for electrolytic capacitor	1
R-44045	Cushion for pilot lamp	1
R-158312	Bar for cassette-up	1
CHASSIS - RADIO Section		
R-AT21005	Chassis assembly	1
R-398137	-Chassis for printed circuit board	1
R-27062	-Pulley	1
R-418125	Printed circuit board (Radio)	1
R-119071	Bracket for volume	1
R-32191a	Antenna holder	1
R-AT21006	Back plate assembly	1
R-119489	Bracket for tuning knob	1
R-119490	Bracket for tuning knob	1
R-248409	Shaft for tuning knob	1
R-328125	Knob for tuning	1
R-39447	Drum for VC	1
R-44122a	Cushion for VC	1
R-S7089	Nut for tuning shaft	1
R-S7086	Special screw for drum	1
	Dial cord 0.5ø × 1200mm	1
R-15041	Coil spring for dial cord	1
R-398157	Mounting base for push switch	1
	Felt 5 × 10 × 15 for antenna	1
R-328158	Knob for BC,SW selector	1
R-258097	Plate spring for BC,SW selector	1
R-248398	Special screw for knob	2
R-S88527	Lever assembly for BC,SW selector	1
R-119310	Lever for BC,SW selector	1
R-248376	Shaft for BC, SW selector	1
	Nylon washer 2.6ø × 5ø × 1t	1
	Nylon washer 3.6ø × 5ø × 0.8t	2
R-248291	Specer for BC,SW selector	1
R-248375	Special screw for BC,SW selector	2

PARTS LIST (MR-412W)

Key. No.	Part No.	Description	Q'ty
ELECTRICAL PARTS			
	R-W1819	Choke coil 15mH	1
	R-W1808	Choke coil 3.3mH	1
	R-W1048	Choke coil 100μH for motor	1
OPT-1	R-W6839	Output transformer	1
OPT-2	R-W6840	Output transformer	1
	R-W6841	Input transformer	1
	R-W8818	Oscillator coil	1
	R-S6973	Speaker	1
	R-W7872	Power transformer	1
	R-R124853	Variable resistor 10K ohm A type	1
	R-R124803	Variable resistor 5K ohm A type	1
	R-R11011	Semi-fixed VR 100K ohm B type	1
	R-S5812	Battery life meter	1
	R-S6888	Microphone	1
	R-R7026	Special resistor 1 ohm 1/4W	1
	R-S4877	Slide switch for R/P changing	1
	R-S2866	Socket for AUX, MIC, EXT SP, REMOTE	1
	R-S88312	Cassette	1
	R-S1858	Telescopic antenna	1
	R-S4266	Slide switch AC-DC, voltage	2
	R-S398050	Microphone stand	1
	R-S1038	Fuse holder	1
	R-S1090	Fuse 1.2A	1
	R-S12011	Lug	2
	R-S3008	Lug	1
	R-S3018	Lug	1
	R-261193a	Heat sink	1
Tr-201		Transistor 2SB400	1
Tr-203- Tr-204- Tr-205-		Transistor 2SB186	3
Tr-206		Transistor 2SB186	1
Tr-210		Transistor 2SB186	1
Tr-207- Tr-208-		Transistor 2SB405	2
Tr-209		Transistor 2SB22	1
Tr-202		Transistor 2SA203	1
		Diode ALC 1S188	1
		Thermistor SDT-06	1
		Rectifier 1S1849R	1
		(AC cord is shosen among following A,B,C & D)	
	R-S1076a	Plug, English-type 3-pin —	1
		3-wired cord	1
	R-S1245	Plug, Australia-type 3-pin A	1
	R-S3823	Terminal 3-pin —	1
	R-S3818	AC power cord —	1
	R-S1817	Plug, Siemens-type 2-pin B	1
	R-S3824	Terminal 2-pin —	1
		3-wired cord —	1
	R-S1076a	Plug, Photex-type, 3-pin C	1
	R-S3823	Terminal 3-pin —	1
	R-S3812	AC power cord —	1
	R-S8574b	AC adaptor, Siemens-type 2-pin	1
	R-S8575b	AC adaptor, English-type 2-pin D	1
	R-S3824	Terminal —	1
ELECTRICAL PARTS - RADIO Section			
L2	R-W2802	Antenna coil for BC band	1
L1	R-W2803	Antenna coil for SW band	1
	R-C1802	Variable capacitor	1
	R-S4911	Slide switch for BC,SW selector	1
	R-W8549	Oscillator coil for BC band	1
	R-W8548	Oscillator coil for SW band	1
T-1	R-W5T008	IFT	1
T-2	R-W5T009	IFT	1
T-3	R-W5T043	IFT	1
	R-R11011	Semi-fixed VR 100K ohm B	1
	R-S3018	Lug	1
	R-23676	Lug	1
	R-S3008	Lug	1
	R-S4861a	Slide switch for Radio-Tape changing	1
	R-S4206	Push switch for pilot lamp	1
	R-S1202	Pilot lamp	1
Tr-1		Transistor 2SA222	1
Tr-2		Transistor 2SA202	1
Tr-3		Transistor 2SA203	1
D-1,2		Diode 1S188	2

Key. No.	Parts No.	Description	Q'ty
RESISTORS			
		Carbon P type	
R201,203		150K ohm ±10% 1/4w	2
R208,223		56K 〃 〃 〃	2
R216		47K 〃 〃 〃	1
R204,225		33K 〃 〃 〃	2
R221,224		15K 〃 〃	2
R215		10K 〃 〃 〃	1
R209		8.2K 〃 〃 〃	1
R227		6.8K 〃 〃 〃	1
R207,230		5.6K 〃 〃 〃	2
R240		4.7K 〃 〃 〃	1
R220		3.9K 〃 〃 〃	1
R206,217, 234,212		3.3K 〃 〃 〃	4
R231		2.7K 〃 〃 〃	1
R214		2.4K 〃 〃 〃	1
R228		2.2K 〃 〃 〃	1
R219		1.8K 〃 〃 〃	1
R226,238 241		1K 〃 〃 〃	3
R235		910 〃 〃 〃	1
R243		820 〃 〃 〃	1
R213,211, 210		470 〃 〃 〃	3
R222		270 〃 〃 〃	1
R202,233		220 〃 〃 〃	2
R239		120 〃 〃 〃	1
R205		100 〃 〃 〃	1
R229,236		68 〃 〃 〃	2
R242		3.9 〃 〃 〃	1
R232		2.7 〃 〃 〃	1
R244		220K 〃 〃 〃	1
R2,7		22K 〃 〃 〃	2
R1		15K 〃 〃 〃	1
R15		12K 〃 〃	1
R16		10K 〃 〃 〃	1
R3		5.6K 〃 〃 〃	1
R8		4.7K 〃 〃 〃	1
R14		3.9K 〃 〃 〃	1
R10		3.3K 〃 〃	1
R4		2.7K 〃 〃 〃	1
R9		1.2K 〃 〃 〃	1
R12		820 〃 〃 〃	1
R13		220 〃 〃 〃	1
R6		68 〃 〃 〃	1
R5		10 〃 〃 〃	1

Key. No.	Parts No.	Description	Q'ty
CAPACITORS			
C227	R-C9930	Electrolytic capacitor 2200μF 10V	1
C218,219 223,228	R-C9864	〃 220μF 6.3V	4
C202,215	R-C9880	〃 100μF 6.3V	2
C204,208 209	R-C9881	〃 33μF 6.3V	3
C229,207, 201,206, 203,222, 210,231	R-C9882	〃 4.7μF 6.3V	8
C212	R-C9126	〃 0.1μF 10V	1
C224	R-C9879	〃 220μF 10V	1
C234,235	R-C9903	〃 47μF 10V	2
C213,221	R-C9898	〃 0.47μF 10V	2
C20	R-C9928	〃 47μF 6.3V	1
C13	R-C9880	〃 100μF 6.3V	1
C19	R-C9881	〃 33μF 6.3V	1
C10	R-C9872	〃 10μF 6.3V	1
C220		Mylar square type 0.068μF ±20% 25WV	1
C216		〃 0.047μF 〃 〃	1
C214		0.033μF ±10% 〃	1
C225,226 236		〃 0.022μF ±20% 〃	3
C230		〃 0.01μF ±10% 50WV	1
C205		〃 0.0015μF ±10% 25WV	1
C232		〃 470pF ±20% 〃	1
C217		〃 0.03μF ±20% 〃	1
C230		〃 0.05μF ±10% 50WV	1

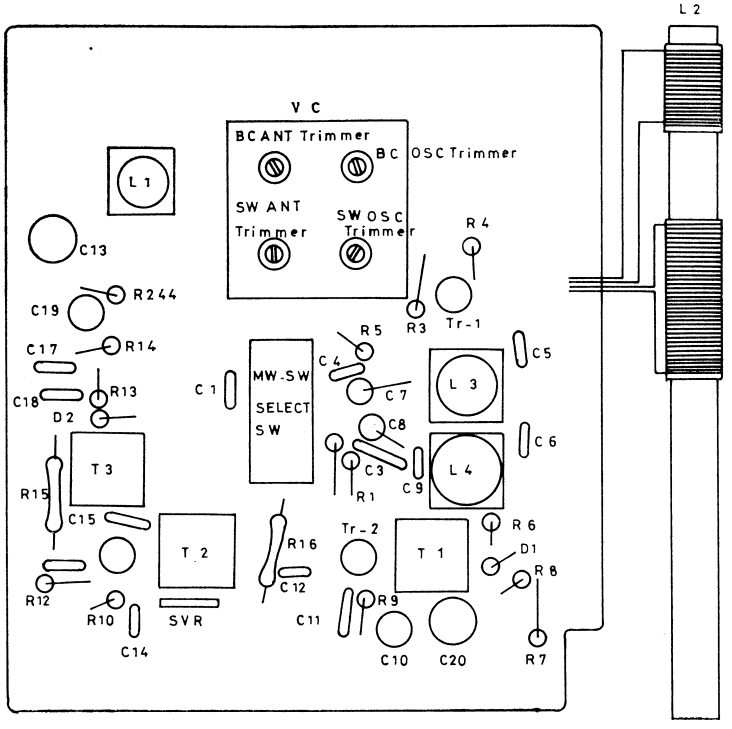

MR-412W TUNER

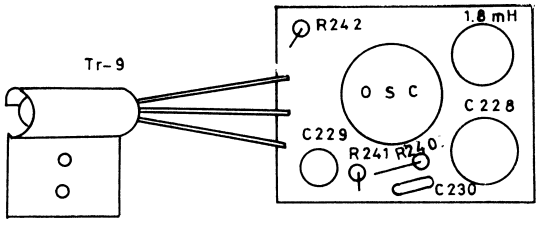

OSC

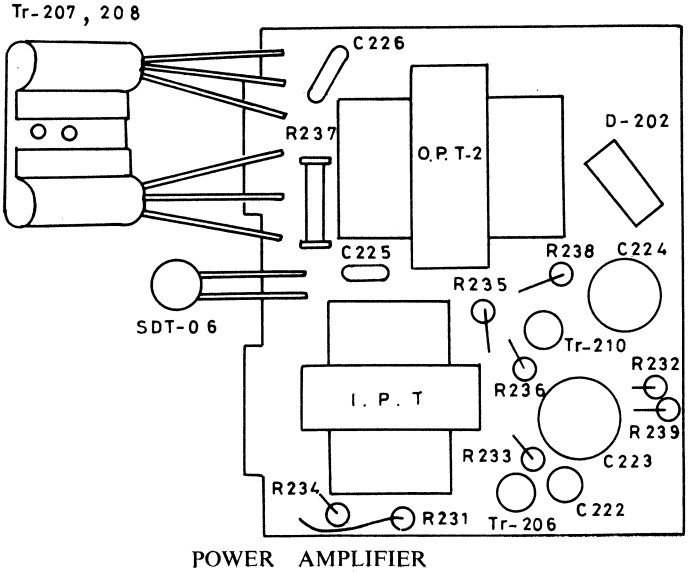

POWER AMPLIFIER

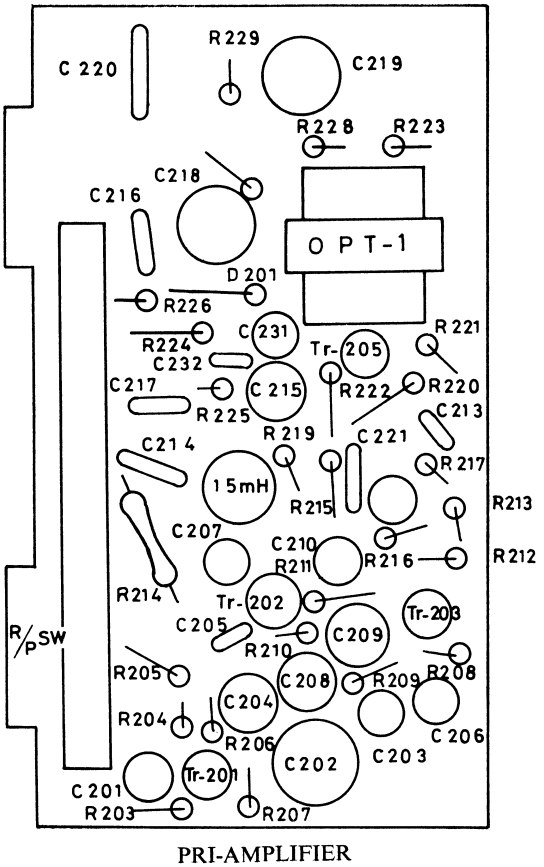

PRI-AMPLIFIER

BLOCK DIAGRAM

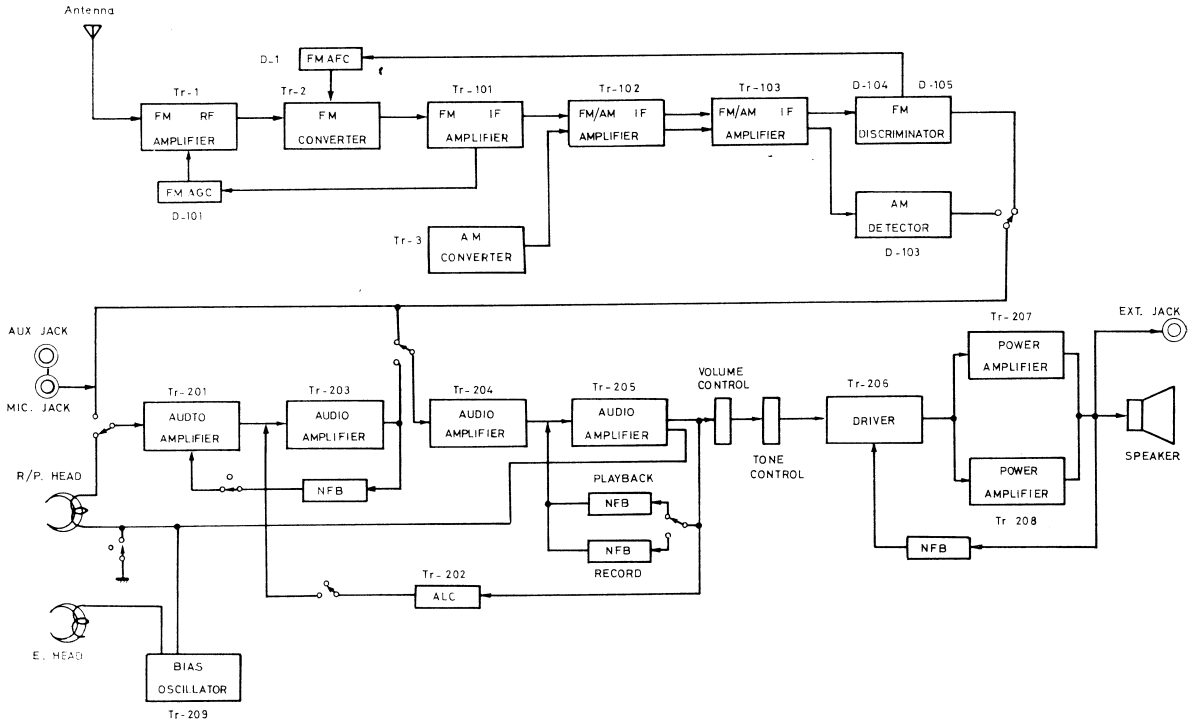

MR-412F

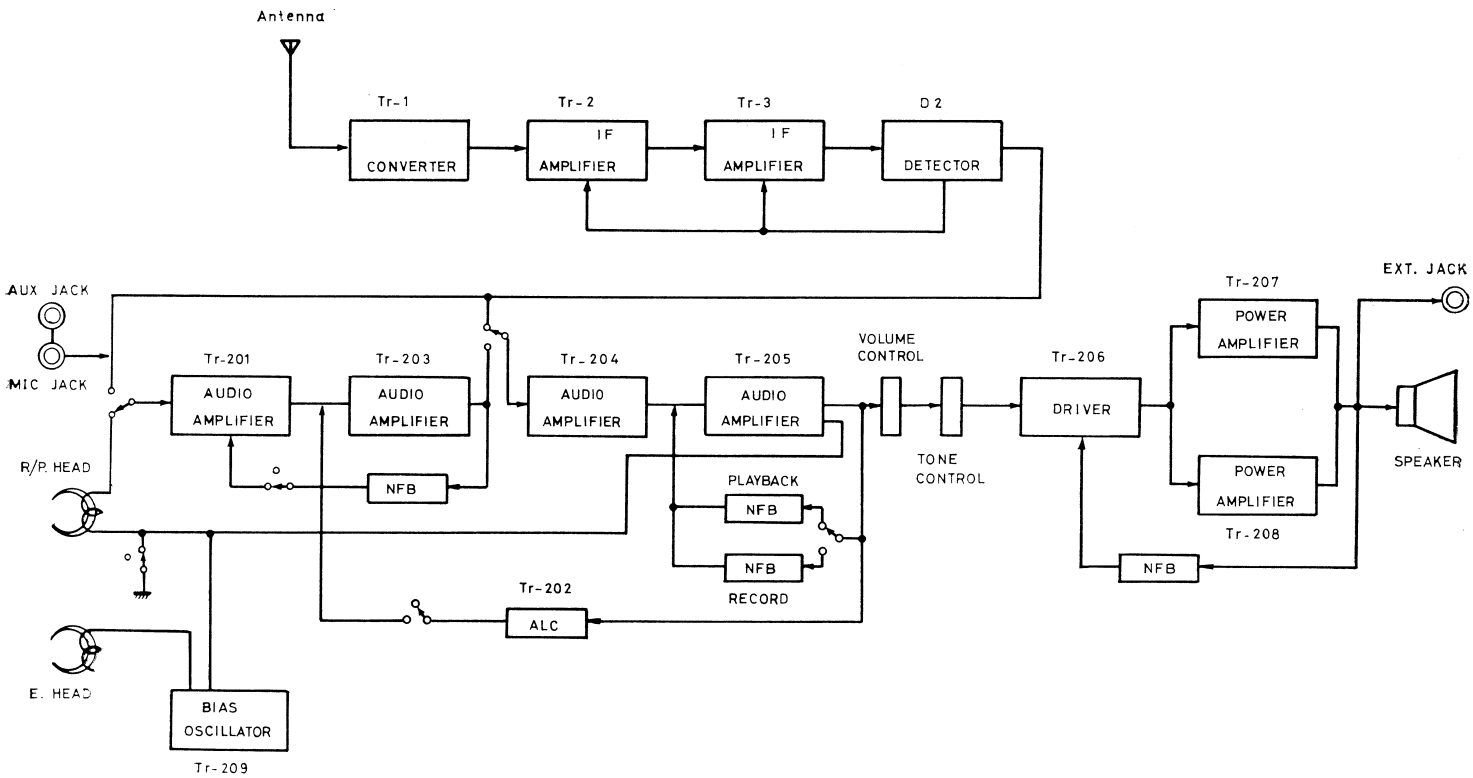

MR-412W

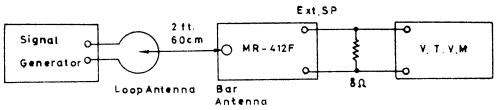

Fig. 12

FM IF ALIGNMENT

Positions of the sweep marker generator switch are as follows:

Xtal select .....10.7M Hz, adjustment ±200K Hz

Sweep frequency .....10.7M Hz marker appears at a position near center of horizontal line.

Response from receiver ...Adjust in accordance with receiver sensitivity.

Marker attenuator .....Adjust to see the marker clearly.

Sweep width .....Adjust while watching the wave shape on oscilloscope.

Phase .....Match the 10.7M Hz mark with the blanking-off.

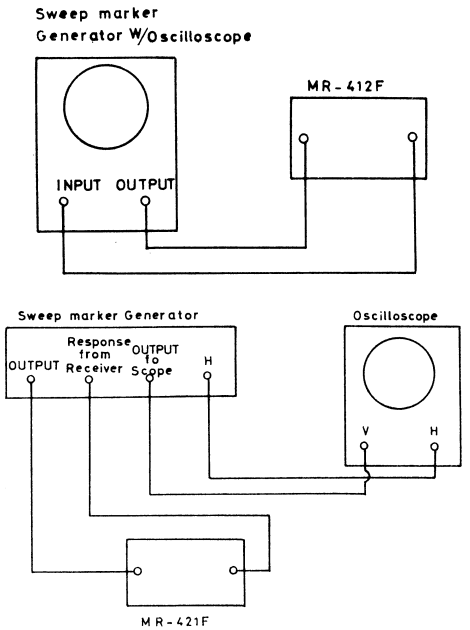

Fig. 13

ADJUSTMENT

Intermediate frequency transformer

1. Set to the FM band and adjust to the lowest VR, tone low.
2. Set to the largest VC and connect the sweep marker generator 10.7M Hz output terminal lead cord to TP-1 and 2 of the set.
3. Connect the sweep marker generator input terminal lead (response from receiver) to TP-3 and 5 of the set.
4. Set the sweep marker generator output power to medium and adjust the IF transformers T1, T101, T102 and T103 so that the wave on the picture tube becomes like that in Fig. 14.

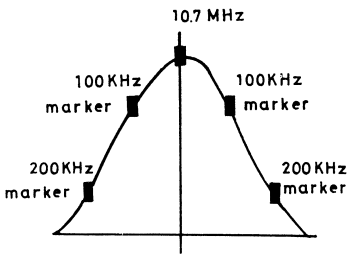

Fig. 14

NOTE

* The 100K Hz and 200K Hz markers should be in symmetry in Fig. 14.
* Adjust 10.7M Hz marker so that it is in the middle.

Detector transformer

1. Set to the FM band and adjust to the lowest VR, tone low.
2. Connect the sweep marker generator 10.7M Hz output terminal lead to TP-1 and 2 at the largest VC position.
3. Connect the sweep marker generator input terminal lead (response from receiver) to TP-4 and 5 of the set.
4. Set the sweep marker output power at a suitable level and adjust so that the picture tube wave becomes like that in Fig. 15; adjust with the detector transformer T104.

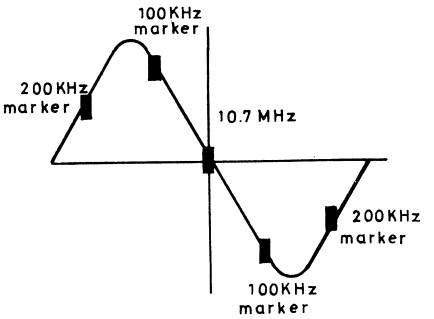

Fig. 15

NOTE

* 100K Hz markers and 200K Hz markers should be in symmetry, as shown Fig. 15.
* The 100K Hz markers in Fig. 15 should be in line, with the 10.7M Hz marker in the center.

Final adjustment of IF transformer and Detector transformer together

* Connection is the same as for the detector transformer adjustment (above).
* Adjust the detector transformer T104 to return the 10.7M Hz marker to the center of the S curve, in case it has moved.
* If the 100K Hz and 200K Hz markers have slipped out of symmetry, correct by adjusting the IF transformer T103.

FM RF ALIGNMENT

ADJUSTMENT

1. Set to the FM band. Shorten TP-5 and TP-6 by clip leads (built-in AFC) to cut AFC circuit. Then adjust.
2. Set the needle to 90M Hz on the dial scale and adjust the low frequency with the FM oscillator coil L4.
3. Set the needle at 109M Hz on the dial scale and adjust the high frequency with the FM oscillator side trimmer Ct-2.
   Repeat steps 2 and 3 adjust so that the needle and dial scale are at the same position.
4. Adjust low tracking points 90M Hz with FM ANT coil L2.
5. Adjust high tracking points 106M Hz with FM ANT side trimmer.
   Repeat steps 4 and 5; adjust until all tracking point errors are eliminated.

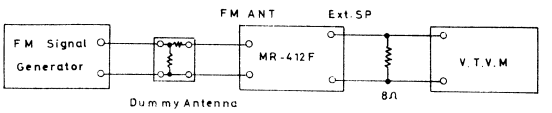

Fig. 16

NOTE

* Use adjusting rod for tracking confirmation.
* Adjustment should be done with as low an input power as possible.

HOW TO ATTACH THE DIAL CORD

Attach the dial cord (0.5ø × 1200mm) by winding it 3 times around the turning shaft and attaching it in the order indicated in Fig. 17. Mark the place where the dial cord is tied by applying a touch of lacquer. Turn the screw, indicated by the arrow in Fig. 18, the distance of A, so that the pointer indicates "O".

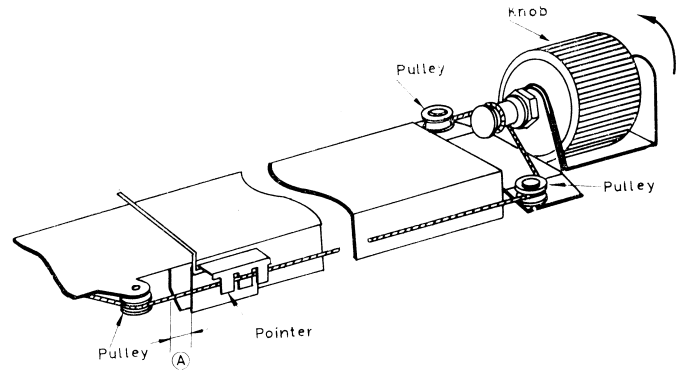

Fig. 18

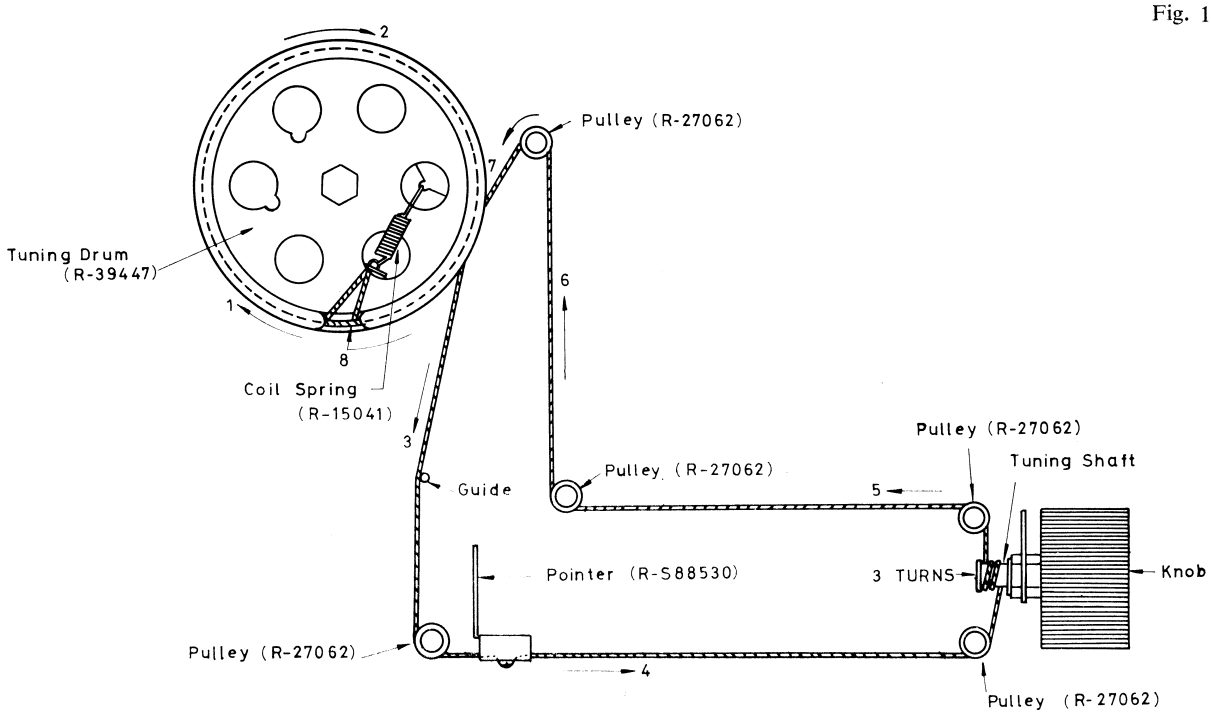

Fig. 17

PARTS LOCATION

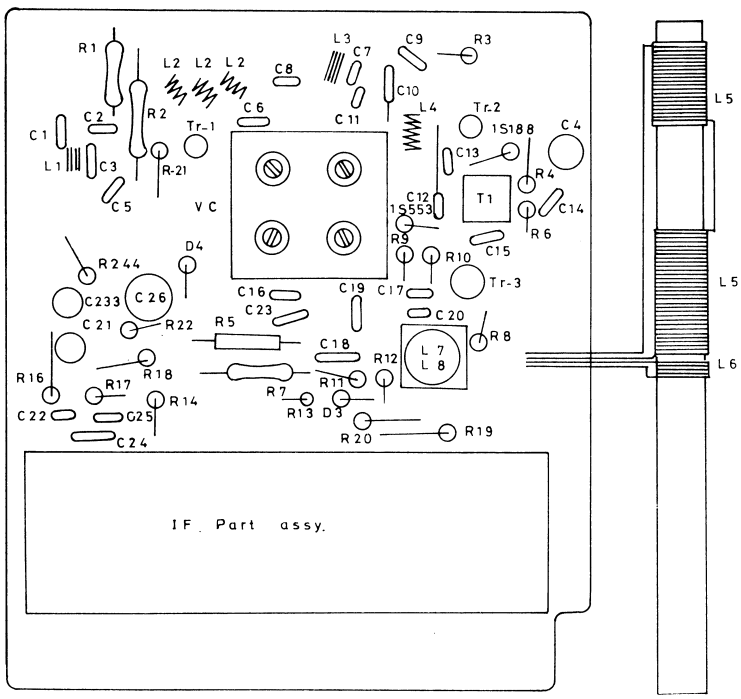

MR-412F TUNER

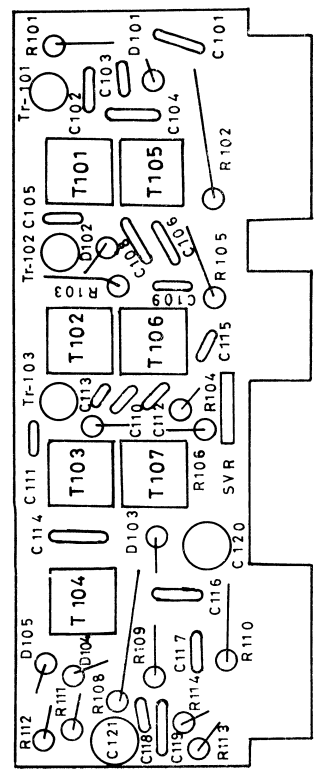

MR-412F IF PART.

DISASSEMBLY INSTRUCTION

To remove the amplifier and mechanism from the cabinet.

1. Pullout the Tone and Volume control knobs, and remove "T" control lever knob by turning counter-clokwise.
2. Remove the four phillips-head screw holding the bottom lid (Fig. 1)
3. Remove the four red phillips-head screw and the stud nut on the chassis.
4. Disconnect speaker and antenna lead wires.

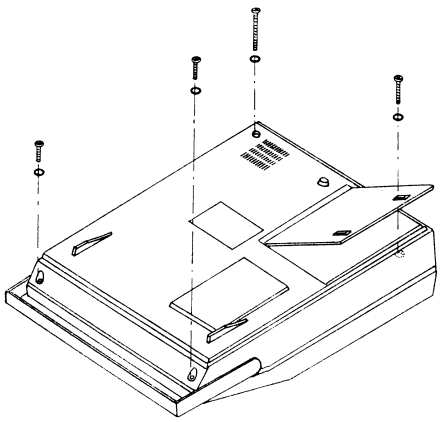

Fig 1

MECHANICAL ADJUSTMENT

To measure the torque of the tape recorder, a torque gauge (Fig. 2) and a tension gauge are necceassry. To use a tension gauge, make a hole in the side of the Cassette as shown in Fig. 3. Be careful that the tape does not rub against the edge of the Cassette; these will make correct measurement impossible.

1. Take-up torque (measure with torque gauge)
   - Play .....40 - 60 gr/cm
   - Fast forward .....60 - 120 gr/cm
   - Rewind .....60 - 120 gr/cm
2. Back tension (measure with tension gauge)
   - Play .....2 - 15 gr/cm
   - Fast forward .....2 - 15 gr/cm
   - Rewind .....2 - 15 gr/cm
3. Tape tension

   As shown in Fig. 4 cut off a length of tape. Tie one end to a thread connected to the tension gauge, and leave the other end hanging loose. Shift the "T" control lever to PLAY and hold the tension gauge steady (do not move it to the left or right). When the tape stops. read the tension gauge. If this reading falls within the range of 50 - 200 gr., no adjustment is needed.

   If it does not fall within this range, adjust the pinch roller pressure. This is done by changing the hole position of the coil spring (R-158155). (Fig. 5) Clean the pinch roller (with alcohol only) so that the tape will not slip.

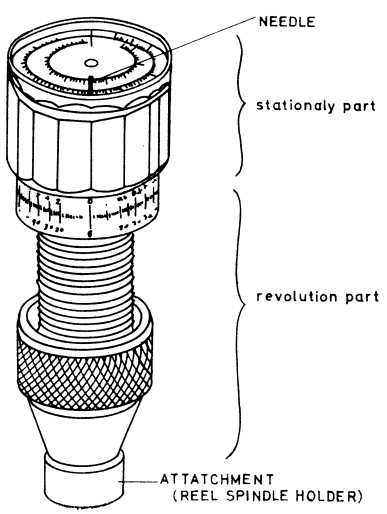

Fig. 2

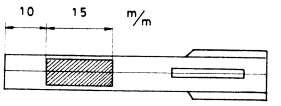

Fig. 3

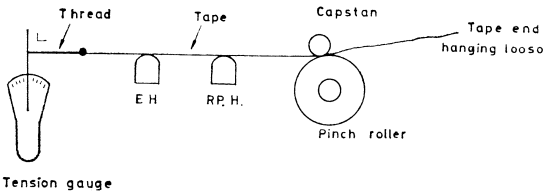

Fig. 4

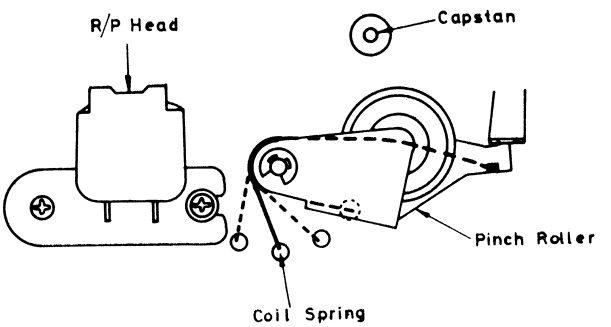

Fig. 5

ELECTRICAL ADJUSTMENT OF TAPE RECORDER

1. Measuring instruments

   In order to test and adjust the electrical parts, the following instruments are required:
   1. Vacuume tube voltage meter
   2. Low frequency oscillator
   3. Attenutor
   4. Destortion meter
   5. Standard tape
2. Oscillation bias current

   Bias current during the recording is measured at both ends of R (10 ohm). Adjustment is made by semi-fixed VR (100k ohm) so that the voltage will be measured 4mV.

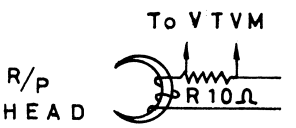

Fig. 6

3. Frequency response

Frequency	150 Hz	1000 Hz	6000 Hz
Tape speed 1-7/8 ips.	+6 ~ −6db	0 db	+6 ~ −6db

Recording: Feed a −76db signal to the Mic. input. (Odb=1V)

Playback: Measure the voltage from the Ext.SP jack (with 8 ohm dummy load) with the VTVM. VR is max. (Tone is high)

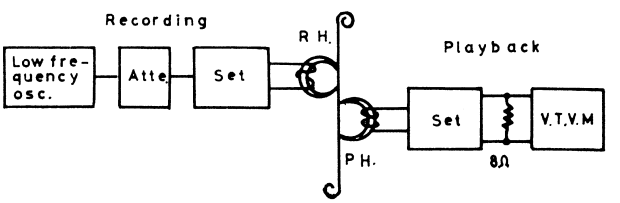

Fig. 7

4. Undistorted output.....more than 1W
   Recording : Feed a −76db signal (1000 Hz) to the Mic. input jack.
   Playback : Measuring point is Ext. SP jack (with 8 ohm dummy load).
   Distortion level of output power should be 10% when the VR is turned. Tone is high.
5. Distortion. .....less than 3%
   Recording : Feed a −76db signal (1000 Hz) to the Mic. input jack.
   Playback : Measuring point is Ext. SP jack (with 8 ohm dummy load). Turn the VR to 10db lower than the maximum output power. Tone is high.
6. Signal to noise ratio .....more than 40db
   Recording : Feed a −76db signal (1000 Hz) to the Mic. input jack.
   Playback : Measuring point is Ext. SP jack (with 8 ohm dummy load). Turn the VR to 10db lower than the maximum output power. Tone is high.
7. Erase rate .....more than 55db
   Recording : Feed a −56 db signal (1000 Hz) to the Mic. input jack.
   Playback : Measuring point is Ext. SP jack (with 8 ohm dummy load). Turn the VR to 10 db lower than the maximum output power. Tone is high.
8. Cross talk.....more than 60 db
   Recording : Feed a −56 db signal (1000 Hz) to the Mic. input jack.
   Playback : Measuring point is Ext. SP jack (with 8 ohm dummy lord). Turn the VR to 10 db lower than the maximum output power. Tone is high.

ELECTRICAL ADJUSTMENT OF TUNER (MR-412W)

IF ALIGNMENT

Preparation : Set for BC reception, loudest volume (tone high).

1. Set the dial to the lowest frequency (largest VC) of the BC band.
2. Adjust the semi-fixed VR 100K ohm so that both edges of Tr-3 emitter resistance R12 (820 ohm) are 0.45V.
3. Feed an intermediate frequency (455K Hz) signal from a signal generator and adjust the intermediate frequency transformer (T1, T2 and T3) to achieve maximum output power.

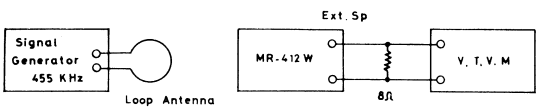

Fig. 8

BROADCAST RF ALIGNMENT

Preparation : *Place a ferrite antenna with its center 60cm away from the center of the loop antenna.
*Set for BC reception, loudest volume (tone high).

1. Set the dial to the lowest frequency (largest VC) of the BC band.
2. Adjust the BC oscillation coil L4 to obtain a 520K Hz (515 - 525K Hz) low cover frequency.
3. Set the dial to the highest frequency (amallest VC) of the broadcast band.
4. Adjust the BC oscillation side trimmer to obtain a 1680K Hz (1650 - 1700K Hz) high cover frequency.
   Repeat steps 2 and 4; adjust until the cover frequencies are within the above ranges.
5. Adjust the BC ANT coil to obtain a 600K Hz low tracking point.
6. Adjust the BC ANT side trimmer to obtain 1400K Hz high tracking point. Repeat steps 5 and 6; adjust so that all tracking point errors are eliminated. Use adjusting rod for tracking conformation.

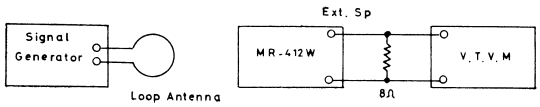

Fig. 9

SHORT WAVE RF ALIGNMENT

Preparation: Set for SW reception, loudest volume (tone high).

1. Set the dial to the lowest frequency (largest VC) of the SW band.
2. Adjust the SW oscillation coil L3 to obtain a 3.1M Hz (3.04 - 3.16M Hz) low cover frequency.
3. Set the dial to the highest frequency (amallest VC) of the SW band.
4. Adjust the SW oscillation side trimmer to obtain a 12.4M Hz (12.8 - 12.1M Hz) high cover frequency.
   Repeat steps 2 and 4; adjust until the cover frequencies are within the above zones.
5. Adjust the SW ANT coil L1 to obtain a 3.5M Hz low tracking point.
6. Adjust the SW ANT side trimmer to obtain an 11.8M Hz high tracking point. Repeat steps 5 and 6; adjust so that all tracking point errors are eliminated.

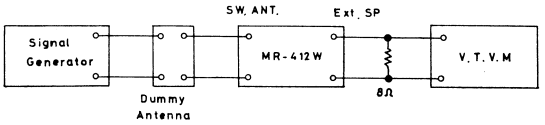

Fig. 10

ELECTRICAL ADJUSTMENT OF TUNER (MR-412F)

AM IF ALIGNMENT

Preparation: Set for AM reception, tone high.

1. Set the dial to the lowest frequency (largest VC) of the AM band.
2. Adjust the semi-fixed volume SVR-101 to achieve a reading of 0.45V from either the Tr-102 emitter resistance R102 (680 ohm) or between J106 and J110
3. Feed an intermediate frequency 455K Hz signal from a signal generator and adjust the intermediate frequency transformer, T105, T106 and T107 for maximum output power of model MR-412F.

NOTE

1. Signal generator output power is 100 - 110 dB.
2. Always control the volume to keep the output power of the set between 120mV and 210mV (8 ohm, voltage between terminals 1.0 - 1.3V).

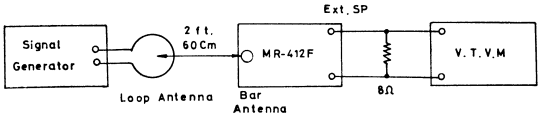

Fig. 11

BROADCAST RF ALIGNMENT

Preparation: Set for AM reception, loudest volume, tone high.

1. Set the dial to the lowest frequency (largest VC) of the AM band.
2. Adjust oscillation coil L7 and L8 to obtain a 515K Hz low cover frequency (510 - 520K Hz).
3. Set the dial to the highest frequency (smallest VC) of the AM band.
4. Adjust the oscillation side trimmer Ct-4 to obtain a 1650K Hz high cover frequency (1640 - 1660K Hz).
   Repeat steps 2 and 4; adjust until the cover frequencies are within the above ranges.
5. Adjust the AM ANT coil L5, L6 to obtain a 600K Hz low tracking point.
6. Adjust the AM ANT side trimmer to obtain 1400K Hz high tracking point.
   Repeat steps 5 and 6; adjust so that all tracking point errors are eliminated.
   Use an adjusting rod for tracking confirmation.

Specifications

Low cover frequency: less than 535K Hz.
High cover frequency: more than 1605K Hz.
Sensitivity at 600K Hz less than 69 dB.
Sensitivity at 1400K Hz less than 69 dB.
Sensitivity at 1000K Hz less than 69 dB.
Tracking aberration output power less than 6 dB.