SANYO

All fasteners subject to metric dimension of International Organization for Standardization.

Portable Cassette Recorder with AM/FM Radio

MODEL MR-411 F/E

SERVICE MANUAL

SANYO ELECTRIC CO., LTD.
INTERNATIONAL DIVISION : SANYO ELECTRIC TRADING CO., LTD.
OSAKA, JAPAN

SPECIFICATIONS

Recording system	AC bias, double track
Erasing system	DC erase
Tape speed	1-7/8 isp.
Recording time	60 min. on double track (C-60)
Rewind & F. forward time	1' 45"
Wow & flutter	0.3% RMS
Output power	2 maximum
Signal to noise ratio	40 dB
Frequency résponse	50 ~ 10,000 Hz
Terminals	MIC 10KΩ AUX IN 220KΩ (RADIO IN 10KΩ in Europe) EXT. SP 8Ω
Frequency range	AM 535 ~ 1,605 KHz (510 - 1,605 KHz in Europe) FM 88 ~ 108 MHz (87.5 - 104 MHz in Europe)
Sensitivity	AM 150 μV (maximum) FM 2 μV (maximum)
Transistors	2SB303 x 1, 2SB186 x 2, 2SB405 x 2 2SB185 x 1 2SA101 x 1, 2SC668 x 1, 2SC772 x 4
Diodes	1S188 x 8, 1S553 x 1
Thermistors	SDT-06 x 1
Rectifiers	1S1849R or 10DC-1R x 1 DS-17 or 10DC-1 x 1
Speaker	4" (10cm) P.D.S
Power source	DC: UM-2 x 4 (C-Cell x 4) AC: 120, 200, 240V 50/60 Hz (110/220V in Europe)
Dimensions	10-1/4"(W) x 7-1/8"(H) x 3-1/16"(L) (180 x 180 x 77 mm)
Weight	5.06 lbs (2.3 Kg)

DISASSEMBLY INSTRUCTION

To remove the amplifier and mechanism from the cabinet;

1. Pull out the Tone, Select and Volume knobs.
2. Place the recorder front side down and remove one screw from the center of the cabinet back.
3. Depressing the cabinet bottom with both thumb, open the back cabinet. See Fig. 1 below.
4. Remove two fastening screws that hold chassis to cabinet.

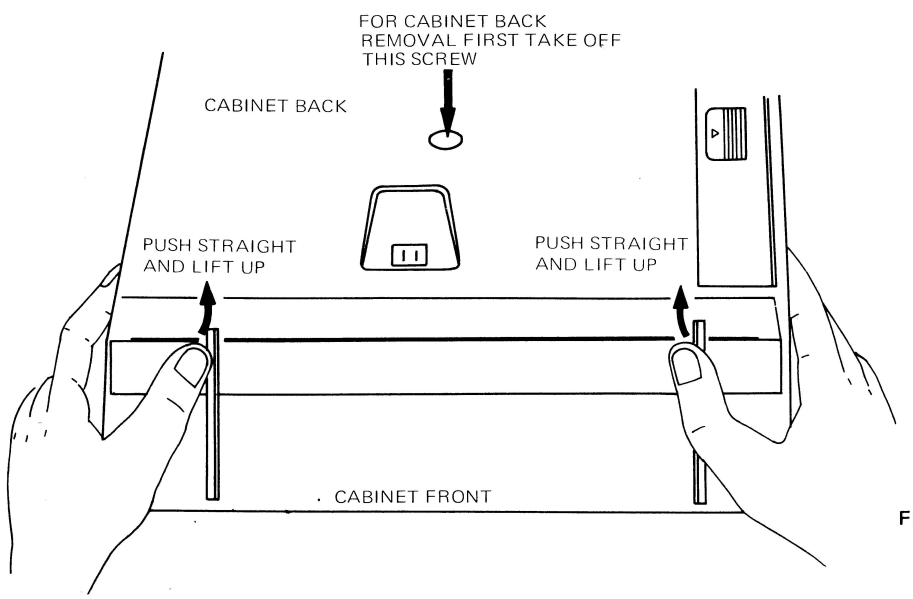

Fig. 1

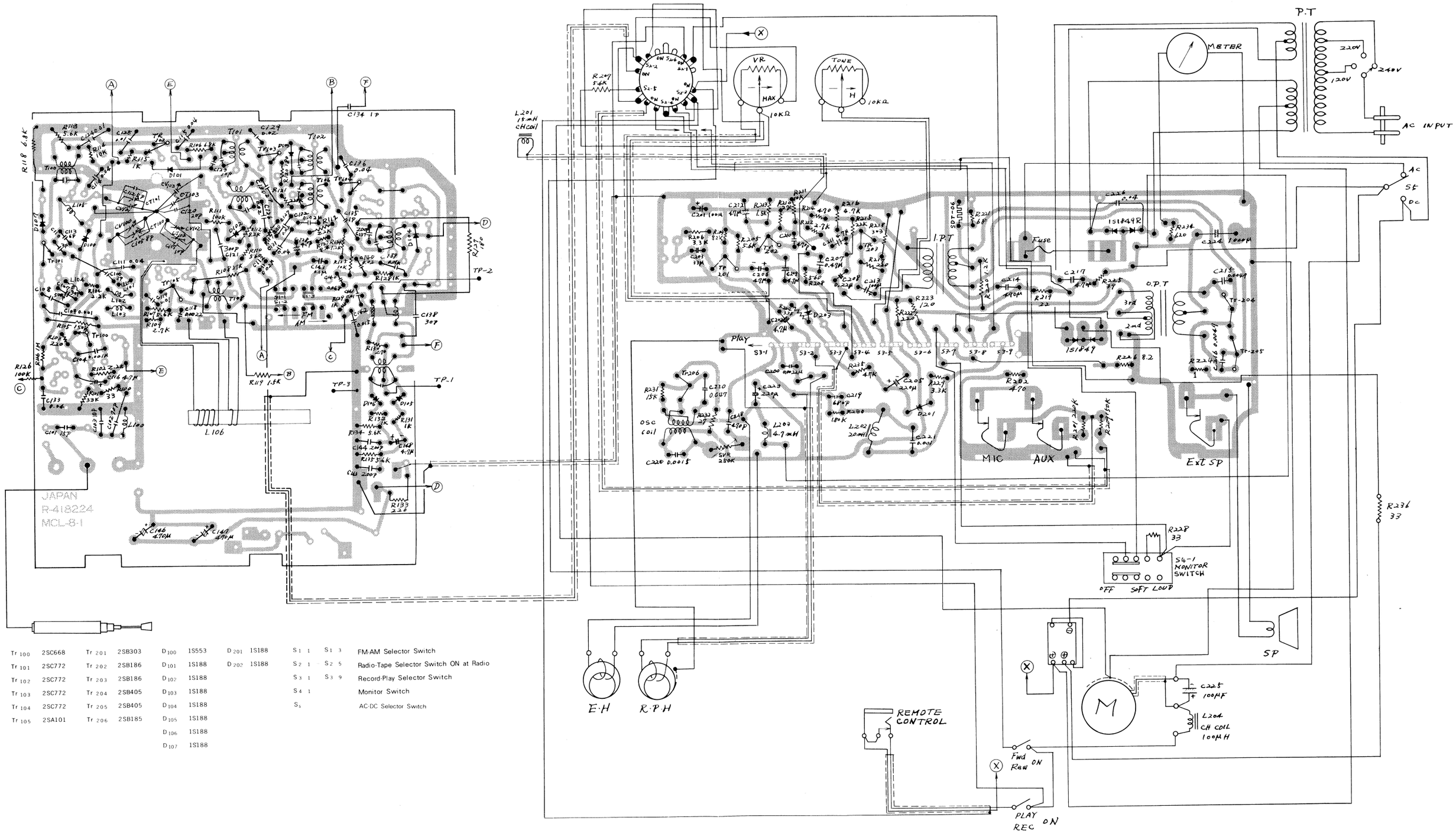

Tr_{100}	2SC668	Tr_{201}	2SB303	D_{100}	1S553	D_{201}	1S188	$S_{1\ 1}$	$S_{1\ 3}$	FM-AM Selector Switch
Tr_{101}	2SC772	Tr_{202}	2SB186	D_{101}	1S188	D_{202}	1S188	$S_{2\ 1}$	$S_{2\ 5}$	Radio-Tape Selector Switch ON at Radio
Tr_{102}	2SC772	Tr_{203}	2SB186	D_{102}	1S188			$S_{3\ 1}$	$S_{3\ 9}$	Record-Play Selector Switch
Tr_{103}	2SC772	Tr_{204}	2SB405	D_{103}	1S188			$S_{4\ 1}$		Monitor Switch
Tr_{104}	2SC772	Tr_{205}	2SB405	D_{104}	1S188			S_5		AC-DC Selector Switch
Tr_{105}	2SA101	Tr_{206}	2SB185	D_{105}	1S188					
				D_{106}	1S188					
				D_{107}	1S188					

Printed in Japan

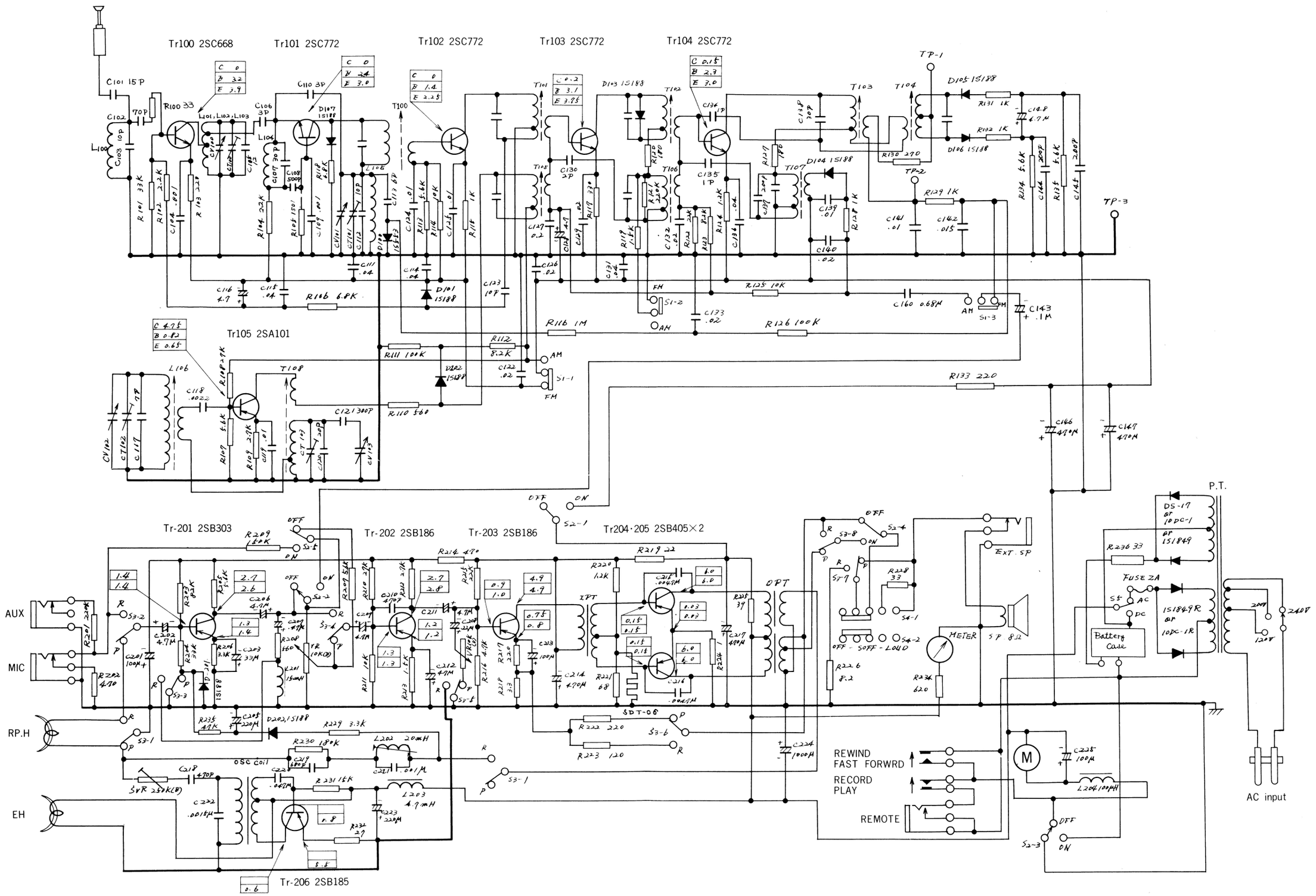

NOTE

1) S1-1 ~ S1-3 : AM-FM SELECT SW "FM" POSITION
2) S2-1 ~ S2-4 : RADIO NO-OFF SW "OFF" POSITION
3) S3-1 ~ S3-9 : RECORDING SW "OFF" POSITION
4) S4-1 : MONITOR "OFF-SOFT-LOUD"
5) ALL RESISTOR VALUES IN OHMS $K = 10^3$
6) ALL CAPACITOR VALUES IN FARADS $U = 10^{-6}$ $P = 10^{-12}$
7) S5 : "AC" "DC" Changing SW
8) Values indicated in ▭ are DC Voltage to the chassis, upper is play lack and lower is Recording mode. And all voltage are negative unless otherwise noticed.

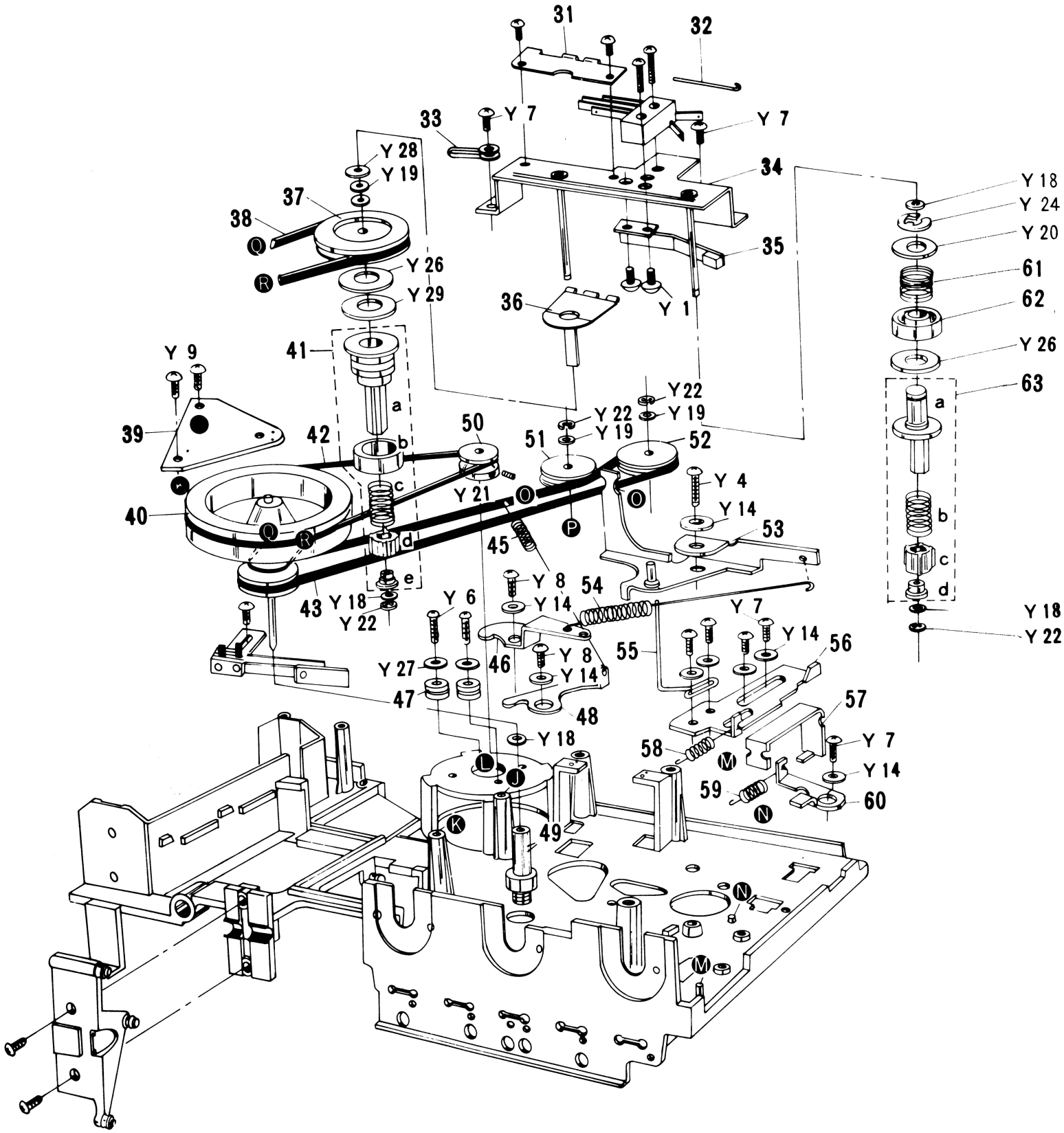
31
32
33
Y 7
Y 7
34
Y 28
Y 19
37
38
Q
R
Y 26
Y 29
35
36
Y 1
Y 18
Y 24
Y 20
61
62
Y 26
63
a
b
c
d
Y 18
Y 22
41
Y 9
39
42
50
51
52
Y 22
Y 19
Y 22
Y 19
Y 4
Y 14
53
40
Y 21
45
P
O
43
Y 18
Y 22
e
Y 6
Y 8
Y 14
54
Y 7
Y 14
56
55
Y 27
46
Y 8
Y 14
47
48
57
Y 18
58
M
Y 7
Y 14
59
N
60
L
J
K
49
N
M

Ref. No.	Part No.	Description	Q'ty
RESISTORS			
R107		Carbon P-type 5.6KΩ ±10% 1/4W	1
R108		" 27KΩ " "	1
R109		" 2.7KΩ " "	1
R110		" 560Ω " "	1
R111		" 100KΩ " "	1
R112		" 8.2KΩ " "	1
R113		" 5.6KΩ " "	1
R114		" 10KΩ " "	1
R115		" 1KΩ " "	1
R116		" 1KΩ " '	1
R117		" 330Ω " "	1
R118		" 6.8Ω " "	1
R119		" 1.5KΩ " "	1
R120		" 180Ω " "	1
R121		" 220KΩ " "	1
R122		" 22KΩ ±5% "	1
R123		" 8.2KΩ " "	1
R124		" 1.2KΩ ±10% "	1
R125		" 10KΩ ±5% "	1
R126		" 100KΩ " "	1
R127		" 180Ω " "	1
R128,129		" 1KΩ " "	2
R130		" 270Ω " "	1
R131, 132		" 1KΩ " "	2
R133		" 220Ω " "	1
R134, 135		" 5.6KΩ " "	2
R201		" 220KΩ " "	1
R202		" 470Ω (1KΩ in Europe)	1
R203		" 82KΩ " "	1
R204		" 33KΩ " "	1
R205		" 5.6KΩ " "	1
R206		" 3.3KΩ " "	1
R207		" 5.6KΩ " "	1
R208		" 560Ω " "	1
R209		" 150KΩ " "	1
R210		" 27KΩ " "	1
R211		" 10KΩ " "	1
R212		" 2.7KΩ " "	1
R213		" 1.5KΩ " "	1
R214		" 470Ω " "	1
R215		" 22KΩ " "	1
R216		" 4.7KΩ " "	1
R217		" 220Ω " "	1
R218		" 3.3Ω " "	1
R219		" 22Ω " "	1
R220		" 1.2KΩ " "	1
R221		" 68Ω " "	1
R222		" 220Ω " "	1
R223		" 120Ω " "	1
R224		" 1Ω " 1/2W	1
R225		" 39Ω " "	1
R226		" 8.2Ω " "	1
R228		" 33Ω " "	1
R229		" 3.3KΩ " "	1
R230		" 180KΩ " "	1
R231		" 15KΩ " "	1
R232		" 27Ω " "	1
R234		" 620Ω " "	1
R235		" 47KΩ " "	1
R236		Carbon L-type 330Ω " 1W	1
MECHANISM			
1	R-S88747	Fast forward lever assembly	1
2	R-128218	Play slide holder	1
3	R-Y552000	Steel ball, play slide	1
4	R-128118a	Spring pin, fast forward lever	1
5	R-S6883	Erase head	1
6	R-128229	Lead clamp	1
7	R-S6939a	Record/Playback head	1
8	R-S88748	Play slide assembly	1
9	R-248521	Pedestal, heads	3
10	R-158154	Pressure spring. R/P head adj.	1
11	R-128219a	Cassette holder	1
12	R-S88634	Pressure lever w/roller assembly	1
13	R-158155a	Torsion spring pressure lever	1
14	R-158358	Tension spring, play slide	1
15	R-248496	Cassette guide	2
16	R-119567	Slide. push button lock	1
17	R-S5210	Motor	1
18	R-248243	Nut, flywheel bearing	1
19	R-128267	Lug	1
20	R-248416	Spacer lock slide	2
21	R-119731	Push button interlock	5
22	R-128276	Tension spring, push button	4

Ref. No.	Part No.	Description	Q'ty
MECHANISM			
23	R-AM11302	Record button	1
24	R-AM11302	Play. Rewind, F. Forward and Stop button	4
25	R158316	Tension spring, lock slide (16)	1
26	R-Y553175	Steel ball, play slide	4
27	R-258144	Sheet, pivot	4
28	R-158367	Bar	1
29	R-AM16001	Holder, tuning shaft	1
	R-398191	Holder	1
	R-27063	Roller	2
	R-24154a	Roller	1
30	R-AM16002	Chassis assembly	1
	R-398186	Chassis	1
	R-27063	Roller	1
31	R-238027	Hinge plate, winding clutch	1
32	R-128099a	Hinge shaft, winding clutch	1
33	R-12011	Lead clamp	1
34	R-S88749	Bracket, reel spindles	1
35	R-AM16303	Lever, back tension	1
	R-258049	Lever	1
		Felt 3x 7 x 1 mm	1
36	R-258143	Plate lever, winding clutch	1
37	R-398078	Pulley, take-up	1
38	R-448059	Belt, take-up drive	1
39	R-S88750	Plate. flywheel pivot	1
40	R-S88746	Flywheel assembly	1
41	R-S88751	Take-up reel spindle assembly	1
41a	R-398220	Reel spindle	1
41b	R-448058	Rubber tire	1
41c	R-328087a	Spindle cap	1
42	R-448040	Belt, flywheel drive	1
43	R-448060a	Belt, rewind and forward	1
45	R-158320a	Tension spring. rewind	1
46	R-119098a	Lever, fast forward	1
47	R-448164	Rubber bushing. motor mtg.	2
48	R-119084	Lever, rewind	1
49	R-S88286a	Flywheel bearing	1
50	R-278103	Motor pulley	1
51	R-398077	Fast forward pulley	1
52	R-398076	Rewind pulley	1
53	R-S88745	Seesaw lever. rewind pulley mtg.	1
54	R-128269	Tension spring. fast forward	1
55	R-158363	Pin, R/P switch act.	1
56	R-119403	Slide, record act.	1
57	R-119729	Slide, miss-record detect	1
58	R-158321	Tension spring. record slide	1
59	R-158318	Tension spring, slide (60)	1
60	R-119096	Lever, miss- record protection	1
61	R-158152a	Pressure spring. supply spindle	1
62	R-398079	Spring cap	1
63	R-S88752	Supply reel spindle assembly	1
63a	R-398221	Reel spindle	1
63b	R-328087	Spindle cap	1
	R-S4954	Spring switch, PLAY	1
	R-S4953	Spring switch, REW & FWD	1
Y 1	R-Y012004	Screw, PH 2x 4 mm	2
Y 2	R-Y012010	Screw, PH 2 x 10 mm	4
Y 3	R-Y012606	Screw, PH 2.6 x 6 mm	2
Y 4	R-Y013016	Screw, PH 3 x 16 mm	2
Y 5	R-Y013018	Screw, PH 3 x 18 mm	1
Y 6	R-Y032610	Screw, OH 2.6 x 10 mm	2
Y 7	R-Y113006	Screw, PH tapping 3 x 6 mm	6
Y 8	R-Y113008	Screw, PH tapping 3 x 8 mm	1
Y 9	R-Y113010	Screw, PH tapping 3 x 10 mm	4
Y10	R-Y113012	Screw, PH tapping 3 x 12 mm	1
Y11	R-Y113014	Screw, PH tapping 3 x 14 mm	1
Y12	R-Y332000	Spring washer 2 mm	7
Y13	R-Y333000	Spring washer 3 mm	1
Y14	R-Y323000	Washer 3 mm	9
Y15	R-Y3226755	Washer 2.6 x 7.5 x 0.5 mm	1
Y16	R-Y342601	Inner tooth washer 2.6 mm	1
Y17	R-YN19705	Nylon washer 1.9 x 7 x 0.5mm	1
Y18	R-YN20405	Nylon washer 2 x 4 x 0.5 mm	3
Y19	R-YN204025	Nylon washer 2 x 4 x 0.25 mm	3
Y20	R-YF5213010	Fiber washer 5.2 x 13 x 1 mm	1
Y21	R-Y102004	Screw, Hd-less 2 x 4 mm	1
Y22	R-Y351500	External "E" ring 1.5 mm	3
Y23	R-Y352000	External "E" ring 2 mm	1
Y24	R-Y354000	External "E" ring 4 mm	1
Y25	R-Y233000	Nut 3 mm	1
Y26	R-H16001	Felt washer 6 x 14 x 1 mm	1
Y27	R-H16002	Eyelet 3 x 6 mm	2
Y28	R-128242	Special washer	1
Y29	R-258051	Special washer	1

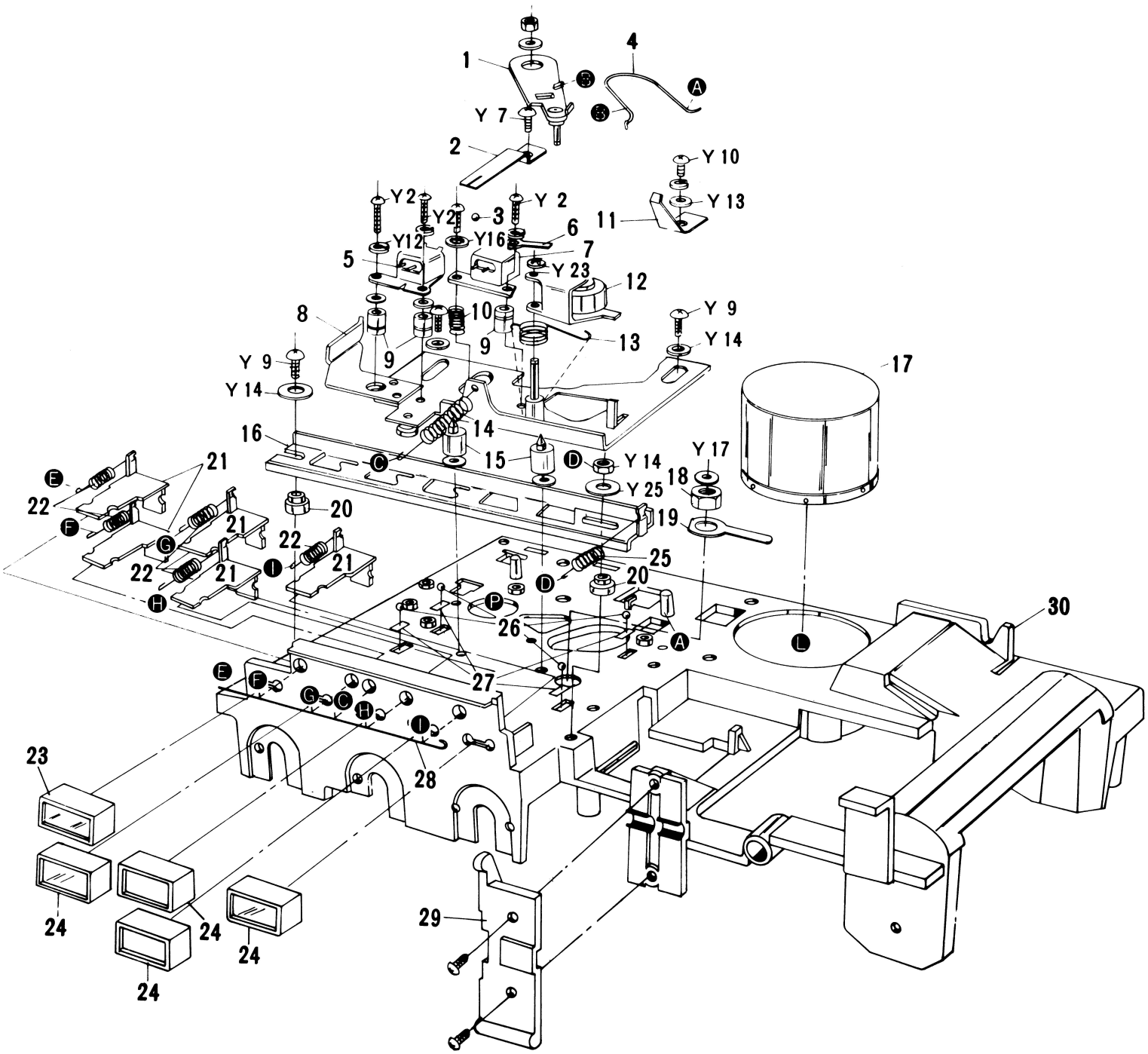
1
4
A
B
B
Y 7
2
Y 10
Y 13
11
Y 2
Y 2
Y 2
3
6
Y12
Y16
7
5
Y 23
12
8
10
Y 9
9
9
13
Y 14
Y 9
Y 14
17
16
14
15
C
D
Y 14
Y 17
18
Y 25
21
E
22
F
20
19
21
G
22
22
21
I
21
25
D
20
H
P
26
30
A
L
E
F
G
C
H
I
27
23
28
24
24
24
24
29

PARTS LIST

Ref. No.	Part No.	Description	Q'ty
PACKING			
As packing parts depend upon the destination, your order must contain its destination mark (A,B,C or D) stamped on a individual carton of the recorder.			
* "B" or "D" marked recorder, order with following part nos.			
	R-498980	Individual carton	1
	R-498931	Filler for Mic. case	1
	R-418249a	Styrol filler, right side of set	1
	R-418250	Styrol filler, left side of set	1
	R-478729	Instruction booklet	1
	R-368145	Vinyl bag. accessories	1
	R-478391	Caution label	1
	R-478419	Serial number label	1
	R-478719	Circuit diagram	1
		Styrol filler (28 x 50 x 215mm)	1
		Poly-bag (350 x 400 mm), set	1
		Poly-bag (70 x 170 mm), AC power cord	1
		Poly-bag (100 x 200 mm), mic.	1
		Poly-bag (140 x 240 mm), case	1
		Poly-bag (180 x 250 mm), inst. booklet	1
		Poly-bag (80 x 120 mm), adaptor	1
* "A" or "C" marked recorder, order with following part nos.			
	R-498998	Individual carton	1
	R-498933a	Filler, bottom	1
	R-498932	Filler, Vinyl bag and mic.	1
	R-418249a	Styrol filler, right of set	1
	R-418250	Styrol filler, left of set	1
	R-478729	Instruction booklet	1
	R-478391	Caution label	1
	R-478419	Serial number label	1
	R-36195	Vinyl bag. power cord	1
	R-478719	Circuit diagram	1
		Poly-bag (350 x 400 mm), set	1
		Poly-bag (100 x 200 mm), mic.	1
		Poly-bag (180 x 250 mm), inst. booklet	1
		Poly-bag (50 x 90 mm), Connector	1
		Poly-bag (80 x 120 mm), spare plug	1
		Poly-bag (200 x 230 mm), vinyl bag & mic.	1
* In Europe, order with following part nos.			
	R-498938	Individual carton	1
	R-418249a	Styrol filler. right of set	1
	R-418250	Styrol filler, left of set	1
		Poly-bag (350 x 400 mm), set	1
	R-478678	Instruction booklet	1
	R-478419	Serial number label	1
	R-368145	Vinyl bag. power cord	1
		Poly-bag (140 x 240 mm), Vinyl bag	1
		Poly-bag (140 x 240 mm), power cord	1
		Poly-bag (100 x 200 mm), Mic.	1
	R-478391	Caution label	1
	R-478680	Circuit diagram	1
	R-498931	Filler, mic. and power cord	1
CABINET			
	R-AT35701	Front cabinet assembly	1
	(R-AT34801)	Front cabinet assembly (in Europe)	1
	R-318298	(Cabinet, plastic body (with stud nut))	(1)
	R-268970	Ornament metal, upper	1
	R-268769	Sash	1
	R-478552	Battery index sheet	1
	R-318310a	Button, EJECT	1
		Rubber cushion 1 x 10 x 10 mm	1
	R-388067	Dial (R-388066 in Europe)	1
	R-268280	Reflector, cassette bed	1
	R-119942	Reinforce metal	1
	R-119735a	Button holder	1
	R-328197a	Dial edging	1
	R-388033	Clear window, dial	1
	R-418029	Cushion	1
	R-398175a	Microphone holder	1
	R-AT35702	Cabinet back assembly	1
	(R-AT34802)	Cabinet back assembly (in Europe)	1
	R-318299	(Cabinet back, plastic body)	(1)
	R-268770	Sash	1
	R-269006	Name plate (R-268971 in Europe)	1
	R-438023	Ribbon	1
		Fiber washer. 3.3 x 8 x 0.5 mm	1
		Felt 10 x 10 x 6 mm	1
		Rubber cushion, 4.5 x 7.5 x 18 mm	1
		Cloth, 10 x 55 mm	1
		Felt, 5 x 10 x 5 mm	2

Ref. No.	Part No.	Description	Q'ty
CABINET			
	R-AT35703	Cassette insertion lid assembly	1
	R-318308	(Plastic body)	(1)
	R-398124	Clear window	1
	R-258102	Plate spring	2
		Rubber cushion, 4 x 6 x 12	1
		Cloth, 5 x 15 mm	2
		Cloth, 5ϕ	1
	R-448185	Rubber ring	1
	R-AT35704	Battery conpartment lid assembly	1
	R-318300	(Lid)	1
		Rubber cushion, 4.5 x 1.5 mm	4
		Sponge cushion, 10 x 13 x 30 mm	2
	R-S88821	Handle	1
	R-278299	Handle holder	2
		Polyethylene washer, 8.2 x 12 x 0.5 mm	2
		Polyethylene washer, 8.2 x 12 x 1.5 mm	2
	R-398250	Latch piece	1
	R-119758	Bracket, latch piece	1
	R-158342b	Pressure spring, latch piece	1
	R-119575a	Lever, cassette eject	1
	R-158332	Tension spring, left of case	1
	R-158350	Tension spring, right of case	1
	R-113377	Speaker fixing metal	1
	R-358054	Ring, antenna	1
	R-AT34905	Knob, RADIO ON-OFF	1
	R-S88814	(Knob)	(1)
	R-268791	Overlay	1
	R-AT34906	Knob, VOLUME & TONE	2
	R-S88775	(Knob)	(2)
	R-268791	Overlay	2
	R-268896	Label	1
	R-398260	Cover, voltage select plug	1
CHASSIS			
	R-268773a	Bracket, heat sink	1
	R-368127	Screen, jacks (R-368160 in Europe)	1
		Rubber cushion, 7 x 7 x 12 mm, meter	1
		Fiber washer, 3.3 x 8 x 0.5 mm, P.C.B.	1
	R-368159	Screen, AC power receptacle	1
	R-158363	Spring lever, R/P switch actuating	1
	R-158231	Tension spring, R/P switch	1
	R-258149a	Battery terminal (–)	1
	R-258150a	Battery terminal (–)	1
	R-318365	Batt. terminal base	1
	R-258151	Batt. terminal (+)	3
	R-128178	Lug, VR ground	1
	R-128145	Bracker, choke coil	1
	R-428178a	Adiabatic sheet, PT(7 x 7 x 12 mm)	1
	R-418029	Cushion, VU meter	1
		Rubber cushion, VU meter (7 x 10 x 16 mm)	1
		Rubber cushion, PT	1
	R-398206	Label, ground (in Europe)	1
	R-398244	Label, fuse rating (in Europe)	1
	R-44065	Rubber cushion, VC	1
	R-148427	Shield enclosure. IFT	1
	R-248530a	Hex. bolt, drum mtg.	1
	R-398225	Tuning drum	1
	R-448177	Rubber, tube, bar antenna mtg.	1
	R-32191a	Antenna holder	1
	R-328198	Tuning knob	1
	R-248458	Tuning shaft	1
	R-248457	Bearing tuning shaft	1
		Dial rope, 0.3 x 600 mm	1
	R-328231	Back plate. dial	1
	R-158231	Tension spring, dial rope	1
	R-248504	Pointer	1
	R-258161	Plate spring, pointer	1
ELECTRICAL PARTS			
	R-AT35705	Printed circuit board w/components, recorder amp. (R-AT34803 in Europe)	1
	R-AT35706	Printed circuit board w/components, radio tuner (R-AT34804 in Europe)	1
P.T.	R-W7924	Power transformer (R-W7923 in Europe)	1
O P T	R-W6870	Output transformer	1
I P T	R-W6226(J)	Input transformer	1
L205	R-W8819	Oscillator coil	1
L204	R-W1048	Choke coil	1
L201	R-W1819	Choke coil	1
L203	R-W1836	Choke coil	1
L202	R-W1842	Choke coil	1
S.P.	R-68002	Speaker	1
	R-R11656b	Variable resistor, 10KΩ tone	1

Ref. No.	Part No.	Description	Q'ty
ELECTRICAL PARTS			
	R-11651	Variable resistor, 10KΩ volume	1
	R-R11018	Semi-fixed resistor, 250KΩ bias adj.	1
	R-S5813	Meter	1
	R-S6963	Microphone	1
S2-1–S2-3	R-S4928	Rotary switch	1
S4-1–S4-2	R-S4805	Slide switch, monitor (R-S4822 in Europe)	1
S3-1–S3-9	R-S4877	Slide switch, R/P select	1
S-5	R-S4945	Slide switch, AC/DC	1
	R-S2859	Socket, MIC, AUX, EXT. SP	3
	(R-S2802)	Socket, DIN type (in Europe)	1
	R-S2839a	Socket, remote	1
	R-S2872	Socket, voltage select	1
	R-S1868	Plug voltage select	1
	R-S1875	Fuse, 2A (R-S1899 80mA, in Europe)	1
	R-S3837	Fuse, holder	2
	(R-S1881)	Fuse holder (in Europe)	1
	R-S3069L	Terminal strip, 3P (in Europe)	1
	R-118293	Shield pipe	1
	R-261193a	Heat sink for 2SB405	1
	R-S3868	Terminal strip, 3P	1
	R-S88682	Audition cassette tape	1
	R-C1805	Variable capacitor (R-C1806 in Europe)	1
L106	R-W2810	Antenna coil	1
L108	R-W8824	Oscillator coil	1
L105	R-W9053	VHF coil	1
L100, 104	R-W9018	VHF coil	2
L101, 102 103	R-W9034	VHF coil	3
T100	R-W5T297	IFT	1
T101, 102	R-W5T825-1	IFT	2
T103	R-W5T826-1	IFT	1
T104	R-W5T310-1	IFT	1
T105, 106	R-W5T311-1T	IFT	2
T107	R-W5T312-1	IFT	1
S1-1–S1-3	R-S4955	Slide switch, AM/FM select	1
	R-S1297d	Telescopic antenna	1
	R-S3018	Lug, antenna	2
	R-25239a	Spring, VC grounding	1
	R-23676	Lug, antenna terminal	1
	R-S3232 (1)	Test point terminal, TP-3	1
	R-S3232 (2)	Test point terminal, TP-1, TP-4	2
	R-S3232 (3)	Test point terminal, TP-2, TP-5	2
Tr 105		Transistor 2SA101	1
Tr 100		Transistor 2SC668	1
Tr 101 – 104		Transistor 2SC772	4
D100		Diode 1S553	1
D101 – 107		Diode 1S188	7
Tr 201		Transistor 2SB303	1
Tr 202 Tr 203		Transistor 2SB186	2
Tr 204 Tr 205		Transistor 2SB405	2
Tr 206		Transistor 2SB185	1
		Diode 1S188, ALC	2
		Thermistor SDT-06	1
		Silicon rectifier 1S1849R or 10DC-1R	1
		Silicon rectifier 1S1849, 10DC-1 or DS-17	1

As the AC power cord depends upon the destination, your order must contain its destination mark (A,B,C or D) stamped on a individual carton of the recorder.

*"A" marked recorder, order with following part nos. .....

	R-S88711	Power cord w/plug (England type)	1
	R-S3828b	Power receptacle terminal (on the recorder)	1
	R-S1245	Spare 3-pin plug (Australia type)	1

* "B" marked recorder, order with following part nos. .....

	R-S88690	Power cord w/plug (SEV type)	1
	R-S3824b	Power receptacle terminal (on the recorder)	1

* "C" marked recorder, order with following part nos. .....

	R-S88712	Power cord w/plug (Photex type)	1
	R-S3823b	Power receptacle terminal (on the recorder)	1
	R-S1076a	Spare 3-pin plug (England type)	1

* "D" marked recorder, order with following part nos. .....

	R-S3856	Power cord w/plug (SEV type)	1
	R-S8574b	Power adaptor, 2-pin/Siemnse type	1
	R-S8575b	Power adaptor, 2-pin/England type	1

Ref. No.	Part No.	Description	Q'ty
ELECTRICAL PARTS			
	R-S3824b	Power receptacle terminal (on the recorder)	1

* In Europe, order with following part nos. .....

	R-S3857	Power cord w/plug	1
	R-S1884	Spare plug	1
	R-S3824b	Power receptacle terminal (on the recorder)	1

Ref. No.	Part No.	Description	Q'ty
CAPACITORS			
C101		Ceramic, 15pF ±10% 50WV	1
C102		Ceramic, 70pF ±10% 50WV	1
C103		Ceramic, 10pF ±1pF 50WV	1
C104		Ceramic, 0.001μF ±20% 50WV	1
C105		Ceramic, 12pF ±10% 50WV	1
C106		Ceramic, 3pF ±0.5pF 50WV	1
C107		Ceramic, 30pF ±10% 50WV	1
C108		Ceramic, 500pF ±10% 50WV	1
C109		Ceramic, 0.001μF ±20% 50WV	1
C110		Ceramic, 3pF ±5pF 50WV	1
C111		Ceramic, 0.04μF +80 –20% 50WV	1
C112		Ceramic, 10pF (8pF in Europe) ±1pF 50WV	1
C113		Ceramic, 6pF ±0.5pF 50WV	1
C114, 115		Ceramic, 0.04μF +80 -20% 50WV	2
C116	R-C9867	Electrolytic 4.7μF 16WV	1
C117		Ceramic, 7pF ±1pF50WV(8pF in Europe)	1
C118		Mylar or Ceramic, 0.0022μF ±20% 50WV	1
C119		Mylar or Ceramic, 0.01μF ±20% 50WV	1
C120		Ceramic, 20pF ±10% 50WV	1
C121		Styrol, 300pF ±5% 25/50WV	1
C122		Ceramic, 0.02μF +80 –20% 50WV	1
C123		Ceramic 10pF ±1pF 50WV	1
C124, 125		Ceramic, 0.01μF +80 –20% 50WV	2
C126, 127		Ceramic, 0.02μF +80 –20% 50WV	2
C128	R-C9867	Electrolytic 4.7μF 16WV	1
C129		Ceramic, 0.02μF +80 –20% 50WV	1
C130		Ceramic, 2pF ± 0.5pF 50WV	1
C131		Ceramic, 0.04μF +80 –20% 50WV	1
C132, 133		Ceramic, 0.02μF +80 –20% 50WV	2
C134, 135		Ceramic, 1pF ±0.5pF 50WV	2
C136		Ceramic, 0.04μF +80 –20% 50WV	1
C137		Ceramic, 200pF ±10% 50WV	1
C138		Ceramic, 30pF ±10% 50WV	1
C139		Mylar or Ceramic, 0.01μF ±20% 50 WV	1
C140		Mylar or Ceramic, 0.02μF ±20% 50WV	1
C141		Mylar or Ceramic, 0.01μF ±20% 50WV	1
C142		Mylar or Ceramic, 0.015μF ±20% 50WV	1
C143	R-C9126	Electrolytic, 0.1μF 10WV	1
C144, 145		Ceramic, 200pF ±10% 50WV	2
C146, 147	R-C9897	Electrolytic, 470μF 6.3WV	2
C148	R-C9867	Electrolytic, 4.7μF 16WV	1
C160		Mylar, 0.068μF ±20% 50WV	1
C201	R-C9871	Electrolytic, 100μF 6.3WV	1
C202	R-C9867	Electrolytic 4.7μF 16WV	1
C203	R-C9865	Electrolytic, 33μF 6.3WV	1
C205	R-C9864	Electrolytic, 220μF 6.3WV	1
C206	R-C9867	Electrolytic, 4.7μF 16WV	1
C207	R-C9898	Electrolytic, 0.47μF 10WV	1
C208	R-C9869	Electrolytic, 0.22μF 10WV	1
C209	R-C9867	Electrolytic, 4.7μF 16WV	1
C210		Ceramic, 500pF or 470pF ±10% 50WV	1
C211	R-C9867	Electrolytic, 4.7μF 16WV	1
C212	R-C9953	Electrolytic, 47μF 10WV	1
C213	R-C9871	Electrolytic, 100μF 6.3WV	1
C214	R-C9879	Electrolytic, 470μF 6.3WV	1
C215, 216		Ceramic, 0.0047μF ±10% 50WV	2
C217	R-C9808	Electrolytic, 470μF 10WV	1
C218		Ceramic, 500pF or 470pF ±10% 50WV	1
C219		Ceramic, 680pF ±10% 50WV	1
C220		Mylar, 0.047μF ±20% 50WV	1
C221		Ceramic, 0.001μF ±10% 50WV	1
C222		Ceramic, 0.0015μF ±20% 50WV	1
C223	R-C9864	Electrolytic, 220μF 6.3WV	1
C224	R-C9854	Electrolytic, 1000μF 10WV	1
C225	R-C9093	Electrolytic, 100μF 10WV	1
C226		Ceramic, 0.04μF ±20% 50WV (in Europe)	1
RESISTORS			
R100		Carbon P-type 33Ω ±10% 1/4W	1
R101		" 33KΩ " "	1
R102		" 2.2KΩ " "	1
R103		" 220Ω " "	1
R104		" 2.2KΩ " "	1
R105		" 1.50KΩ " "	1
R106		" 6.8KΩ " "	1

FM ADJUSTMENT

Step	Adjusting Circuit	Connections		SG frequency	Position of tuning dial	Adjustment	VTVM Oscilloscope
		Input	Output				
1	I.F.	Connect sweep generator to FM ANT. terminal.	Connect oscilloscope to test point TP-1.	10.7 MHz (non modulation)	Near max. capacity of VC at position with no unrequired signal.	T100, T101, T102 & T103	
2	Ratio Det.		Connect oscilloscope to test point TP-2.			T104	
3	O.S.C.	Connect FM SG. to FM ANT. terminals.	Connect VTVM to speaker terminal.	88 MHz (400 Hz 30% modulation)	88 MHz on dial scale	L105	Max.
4				108 MHz (400 Hz 30% modulation)	108 MHz on dial scale	CT101	
5	ANT.	Connect FM SG. to FM ANT. terminals.	Connect VTVM to speaker terminal.	88 MHz (400 Hz 30% modulation)	88 MHz on dial scale	L101 to L103	Max.
6				108 MHz (400 Hz 30% modulation)	108 MHz on dial scale	CT100	
7	Repeat adjustments.						

PREPARE:

1. Variable Capacitors completely closed.
2. Set the dial pointer to very reference line of dial scale.
3. Connect sweep generator, FM SG, VTVM and oscilloscope. FM antenna input impedance is 75 ohm.
4. Use a screwdriver with plastic grip for all adjustments.

PARTS LOCATION

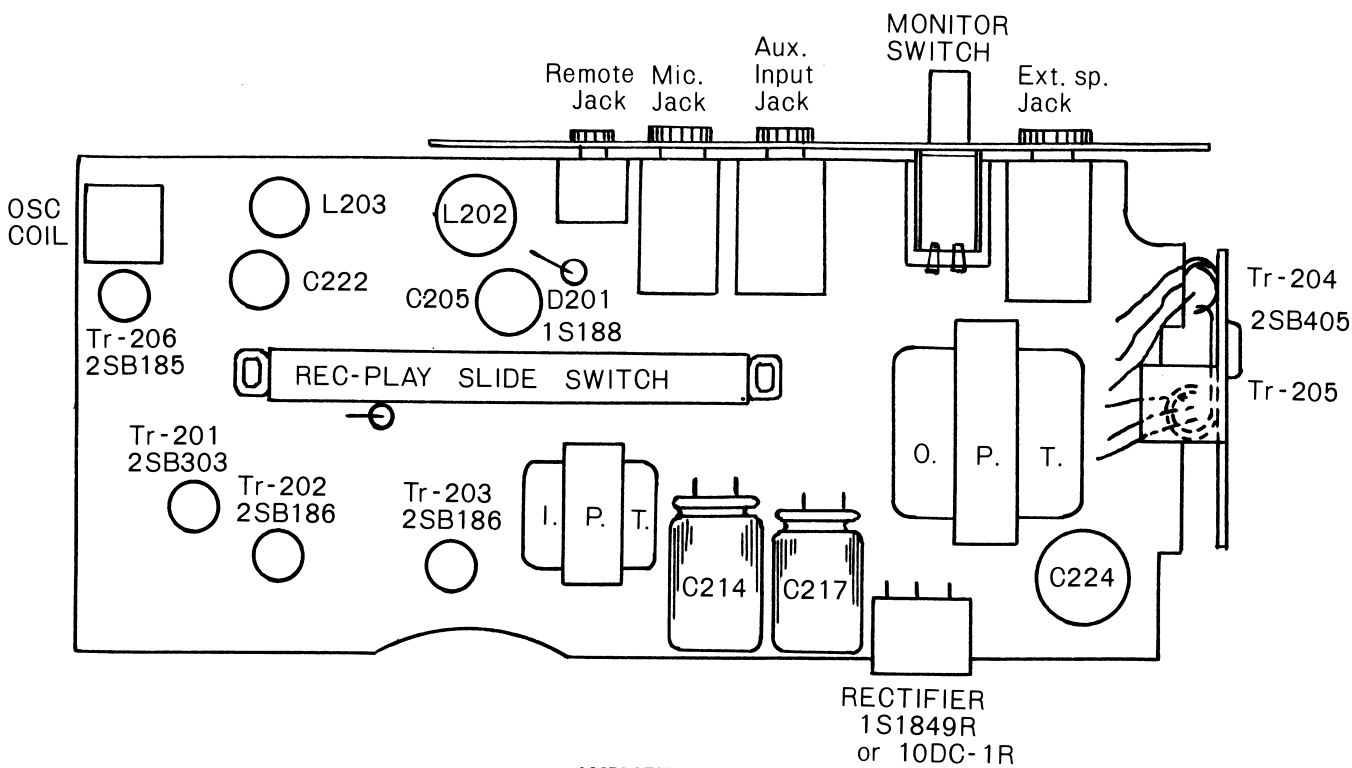

AMPLIFIER

PARTS LOCATION

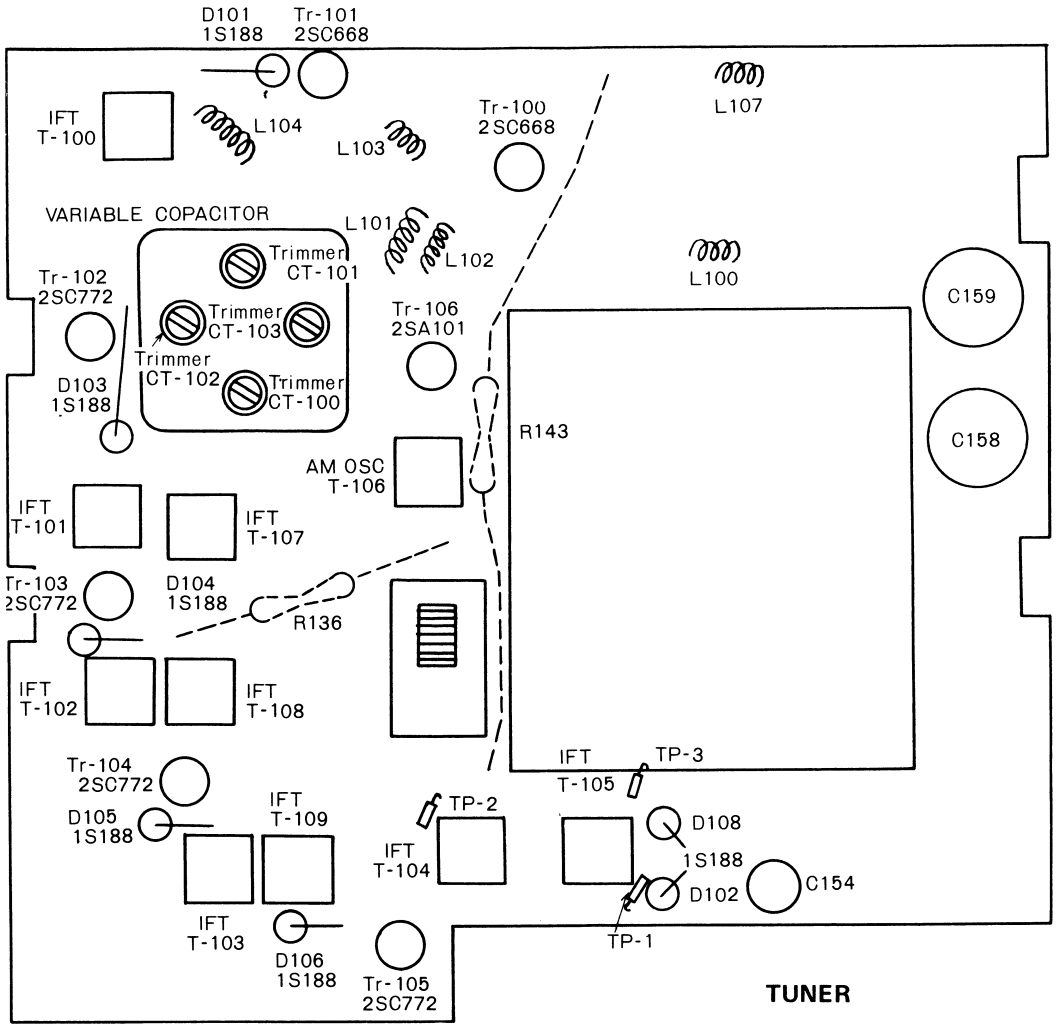

BLOCK DIAGRAM

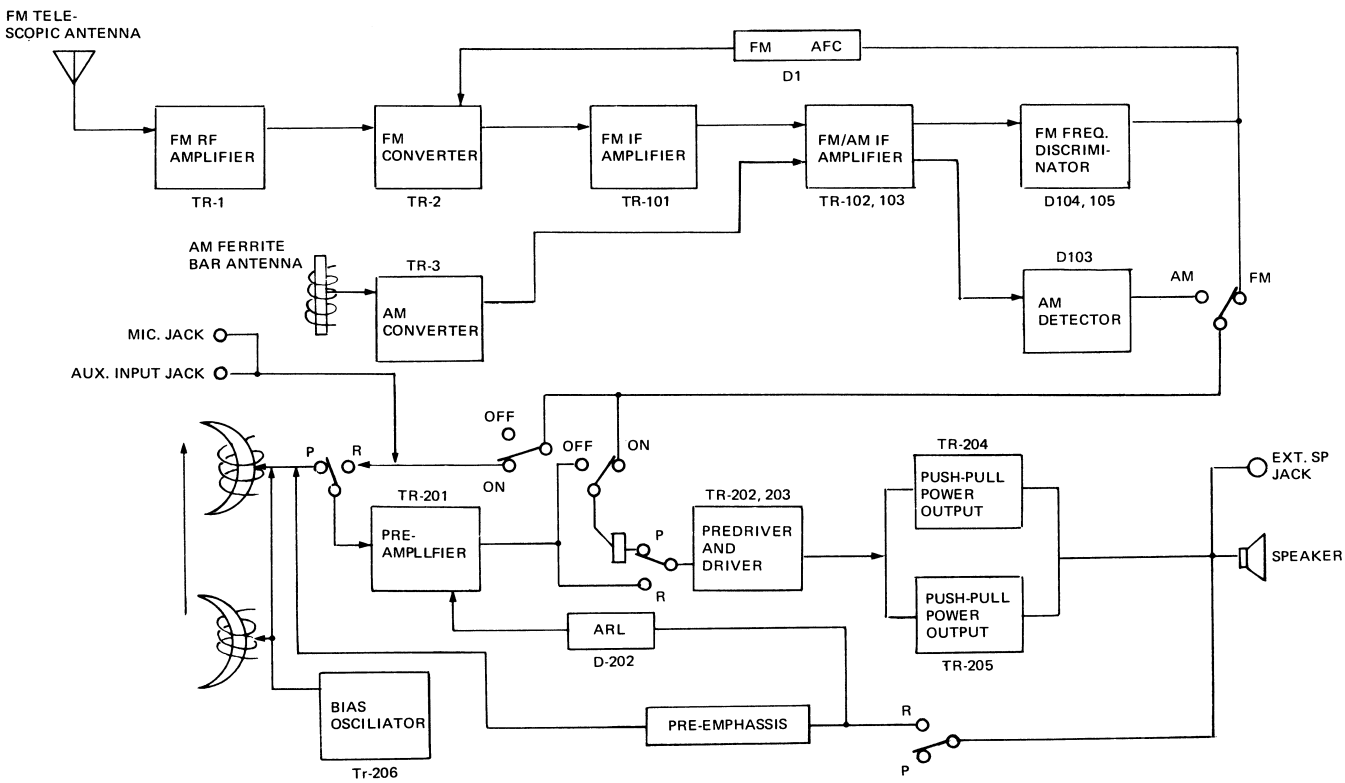

MACHANICAL ADJUSTMENT

To measure the torque of the tape recorder, a torque gauge (Fig. 2) and a tension gauge are necessary. To use a tension gauge, make a hole in the side of the Cassette as shown in Fig. 3. Be careful that the tape does not rub against the edge of the Cassette; these will make correct measurement impossible.

1. Take-up torque (measure with torque gauge)

Play	40 - 70 gr/cm
Fast forward	55 - 90 gr/cm
Rewind	55 - 90 gr/cm

2. Back tension (measure with tension gauge)

Play	2 - 15 gr/cm
Fast forward	2 - 15 gr/cm
Rewind	2 - 15 gr/cm

3. Tape tension

As shown in Fig. 4 cut off a length of tape. The one end to a thread connected to the tension gauge, and leave the other end hanging loose. Place the recorder in PLAY mode and hold the tension gauge steady (do not move it to the left or right).

When the tape stops, read the tension gauge. If this reading falls within the range of 50 - 200 gr., no adjustment is needed. If it does not fall within this range adjust the pinch roller pressure. This is done by changing the hole position of the coil spring (R-158155a). (Fig. 5) Clean the pinch roller (with alcohol only) so that the tape will not slip.

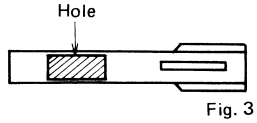

Fig. 3

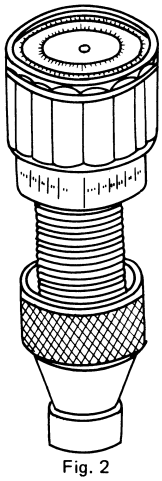

Fig. 2

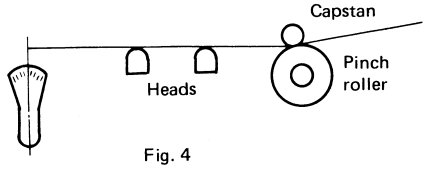

Fig. 4

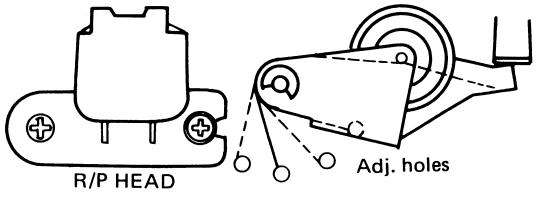

Fig. 5

4. Button pressure

Push the edge of button as shown in Fig. 6. When the pressure required to lock each button falls within the range shown below, no adjustment is neccessary;

Stop → Play	800 ~ 1900 gr
Play → Stop	500 ~ 1200 gr
Stop → Forward	800 ~ 1800 gr
Stop → Rewind	800 ~ 1800 gr
Rewind → Stop	500 ~ 1200 gr
Stop → Record	500 ~ 1200 gr
Record → Stop	250 ~ 1000 gr

If the pressure does not correspond to the above figures, adjust the strength of the coil springs (28); also adjust the force of the coil spring (22) connected to the slide (21).

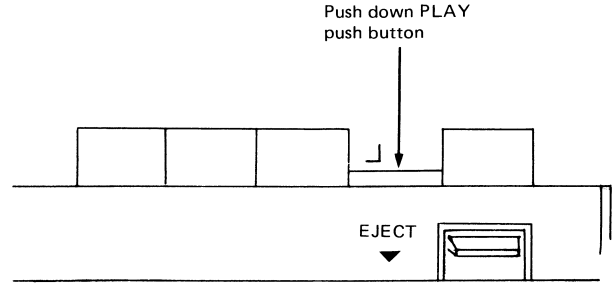

Fig. 6

5. Record/Play head azimuth adjustment

Maximum output and frequency response can be obtained only when the record/playback head is correctly aligned for azimuth. Azimuth alignment refers to the positioning of the head in respect to the tape which passes across it during recording and playback. Since the head adjustment screw is set and sealed at the factory, adjustment should not be required unless the screw has been accidently put out of adjustment in some manner.

If a record/playback head becomes defectibe, it will be necessary to align the new head for correct azimuth after installation.

To do so, proceed as follows;

1. Thread a pre-recorded test tape (cassette type) (7,000 Hz standard frequency tape) onto the recorder.
2. Connect an AC voltmeter across the speaker voice coil terminals. To make this connection without removing the recorder from the cabinet, connect an external speaker or a dummy load resistor (same impedance as that of the speaker voice coil) to the MONIT EXT. SP. terminal.
   NOTE: Set the voltmeter on the 1.5 VAC scale.
3. Depress the PLAY button and turn the tone control clockwise until a reading is obtained on the AC voltmeter.
4. Rotate the head adjustment screws clockwise or counter-clockwise, and continue this procedure until maximum output is obtained as indicated by the AC voltmeter.

6. Head demagnetization

Magnetization of the heads may result when the continuity of the head is measured with an ohm meter. If it is necessary to measure head continuity, the head should be demagnetized after the continuity check.

Head magnetization is evidenced by a high residual noise (a hissing and low popping sound) when a virgin or completely erased tape is played at a high volume level.

The magnetization may be neutralized by use of a standard demagnetization tool. The tip of the tool should not be used through the pad but must be thin enough to fit between the pressure pad and the record/play head. A piece of cellulose tape should be placed over the end of the tool to prevent metal-to-metal contact between the tool and the head. After demagnetization is completed, slowly remove the tool from the vicinity of the head BEFORE the current is turned off.

ELECTRICAL ADJUSTMENT

1. Bias Oscillator Frequency
   As shown in Fig. 7, connect a 10 ohm resistor in series with the ground lead wire of the Record/Playback head. Connect the vertical input of the oscilloscope across the resistor; connect the horizontal input of the oscilloscope to the output terminal of an Audio Frequency Oscillator (AF Oscillator).
   With the switch set to RECORD mode and connected as above, a lissajous figure will appear on the oscilloscope. Standard frequency is 40KHz ±5KHz. If the frequency is not within the above range, change the oscillator coil or C222 (0.0015μF).

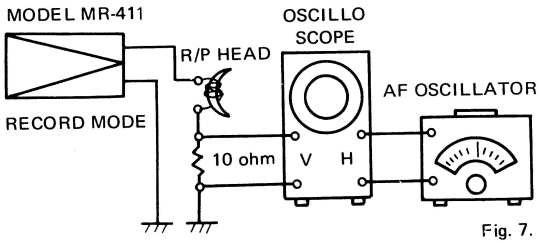

Fig. 7.

2. Head Bias Current
   Proper bias is necessary for optimum recording. Adjust the bias Oscillator frequency as descrived above. Bias current during recording is measured at both ends of a 10 ohm resistor inserted between R/P head and ground (See Fig. 8 below).
   Before adjustment of SVR, Bias-trap coil (20mH) should be adjusted. Adjust Bias-trap Coil with a screwdriver or equivalent through the adj. hole on the printed circuit board, so that the voltage across 10 ohm resistor attains maximum value. Then, adjust SVR so that the voltage across 10 ohm resistor will be 3.5 mV to 4.0 mV the AC VTVM.

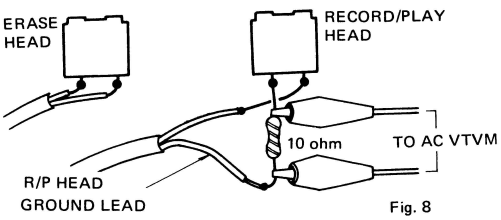

Fig. 8

DIAL CORD STRING

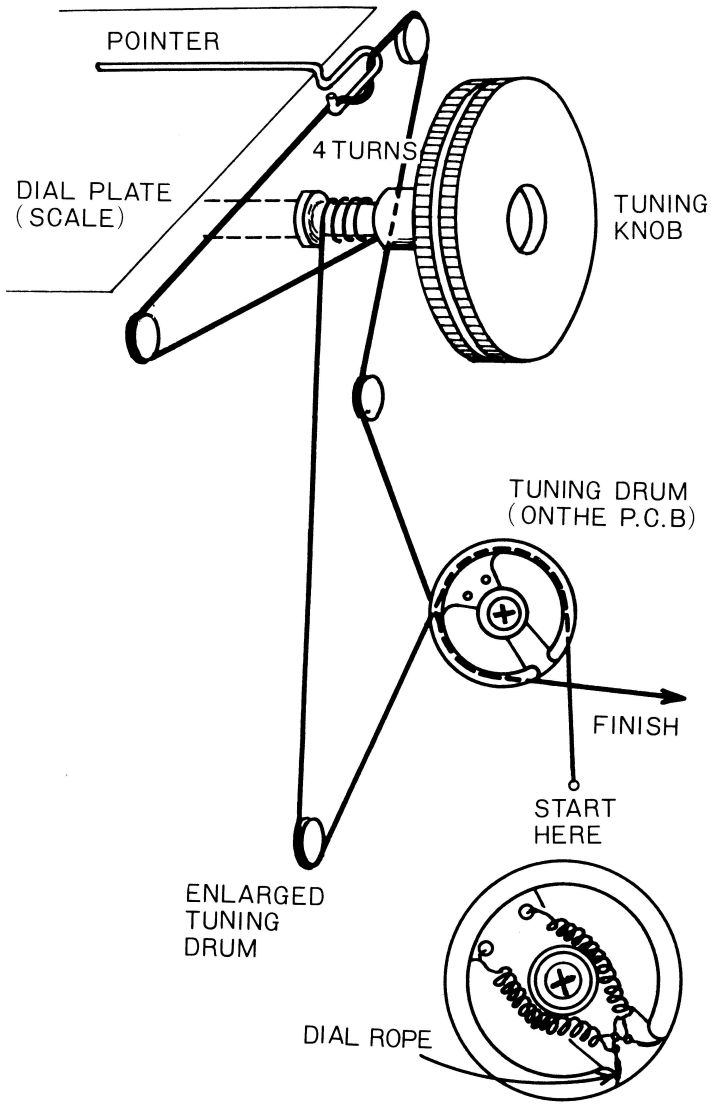

AM ADJUSTMENT

Step	Adjusting Circuit	Connections		SG frequency	Position of tuning dial	Adjustment	VTVM Oscilloscope
		Input	Output				
1	I.F.T.	Connect sweep generator to ANT. terminal.	Connect oscilloscope to test point TP-5	455 KHz (400 Hz 30% modulation)	Low end of dial scale. At position of no unrequired signal.	T105, T106, and T107	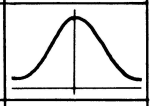
2	O.S.C.	Connect AM SG to ANT. terminal.	Connect VTVM to speaker terminals	600 KHz (400 Hz 30% modulation)	600 KHz on dial scale	T108	Max.
3				1400 KHz (400 Hz 30% modulation)	1400 KHz on dial scale	CT-103	
4	ANT.	Connect AM SG to ANT. terminal.	Connect VTVM to speaker terminals.	600 KHz (400 Hz 30% modulation)	600 KHz on dial scale	L106	Max.
5				1400 KHz (400 Hz 30% modulation)	1400 KHz on dial scale	CT-102	
6	Repeat adjustments						

PREPARE:
1. Variable capacitors completely closed.
2. Set the dial pointer to very reference line dial scale.
3. Connect sweep generator, SG, VTVM and oscilloscope.
4. Selector switch to "AM"
5. Use a screwdriver with plastic grip for all adjustments.