SANYO

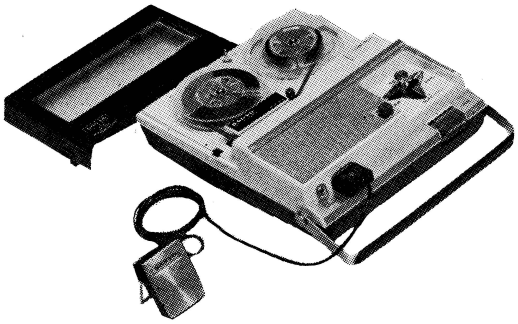

Solid State Battery Operated Tape Recorder

MODEL MR-212

SERVICE MANUAL

SANYO ELECTRIC CO., LTD.
INTERNATIONAL DIVISION: SANYO ELECTRIC TRADING CO., LTD.
OSAKA, JAPAN

SPECIFICATIONS:

Transistors	2SB303 or 2SB346 Ist amplification stage 2SB186A 2nd amplification stage 2SB186A 3rd amplification stage 2SB22×2 Output stage 2SB187AA Oscillator for recording bias 2SA203AA Automatic level control
Other elements used	SDT-09 (Thermistor) For temperature compensation 1S188 or IN60 (Diode) Automatic level control
Recording system	AC bias, double tracks
Erasing system	DC erase
Output power	Undistorted 500mW Maximum 600mW
Power requirement	DC 9V: 6×1½volt C-size battery (UM-2)
Tape speed & Recording time	3-3/4″ (9.5cm)/sec ····· 32 minutes 1-7/8″(4.75cm)/sec ····· 64 minutes
Tape reel	Maximum 3¼″ dia.
Forward & Rewinding time	Up to 2¼ min.
Frequency response	150-6,000 c/s at 3-3/4″/sec. 150-3,000c/s at 1-7/8″/sec.
Loudspeaker	4″×2-5/8″ permanent dynamic speaker Voice coil impedance 8 ohms
Signal-to-noise ratio	Over than 30 db
Dimensions	7-7/8″ width×9-3/4″ depth×3-1/8″ height (200mm×248mm×80mm)
Weight	Only 4 lbs. (1.8Kg) approx. without batteries
Accessories	Dynamic microphone (with remote on-off switch), Full tape and empty 3¼″ reels, Splicing tape and Accessory case(vinyl)

HOW IT WORKS:

In a recorder the sound is recorded on the tape magnetically. After the sound vibrations have been caught by the microphone, they reach via transistors etc., one of the two magnetic heads, which are situated under the smaller plastic cover. The tape running along this head is coated with countless minute particles of iron oxide. These are magnetized by the magnetic head in the characteristic pattern of the sound vibrations, which thus become recorded. After the tape is rewound, the recorder is switched over for playback. The same head scans the magnetic pattern of the tape, which is finally made audible via the loudspeaker. In addition, a tape can be used over and over again for new recordings. The magnetic pattern already on the tape is automatically erased by a separate erasing head, which is switched on only during recording. Except for strong magnetic fields, such as arise in the immediate proximity of a loudspeaker magnet or transformer, there are practically influences harmful to the recording.

REMOVING THE MECHANISM OUT OF THE CABINET:

1. Remove all operation knobs by loosening counter-clockwise.
2. After loosening two screws (+) on the back cover, the back cover can be removed from the cabinet.
3. For removing the chassis from the cabinet, loosen four screws (+) marked in red on the chassis.

ADJUSTMENT OF MECHANISM:

When defective operation is encountered in rewind or fast forward, when unusual slack is produced at the time of changing from stop to play, or when improper tension is noted on the tape in each operation, although the tape recorder is properly operated, the following adjustments are neccessary.

1) Equipment and Gauges

In making adjustments no special tools or gauges will be needed. But in order to raise the degree of reliance on the mechanism by checking the functions and comparing with the standard machine, the gauges listed below will prove convenient.

Tester: The internal resistance should be high as much as possible.
Tension Gauge: 0-100g, 0-500g
Spring Scale: 2kg with 100g

2) Brake Mechainism

When the Operation Lever is moved to stop position after the following operation, the recording tape should stop immediately without loosening or slackening; (1) Rapid Winding, (2) Rewinding, (3) Recording, (4) Playback.

Stop position

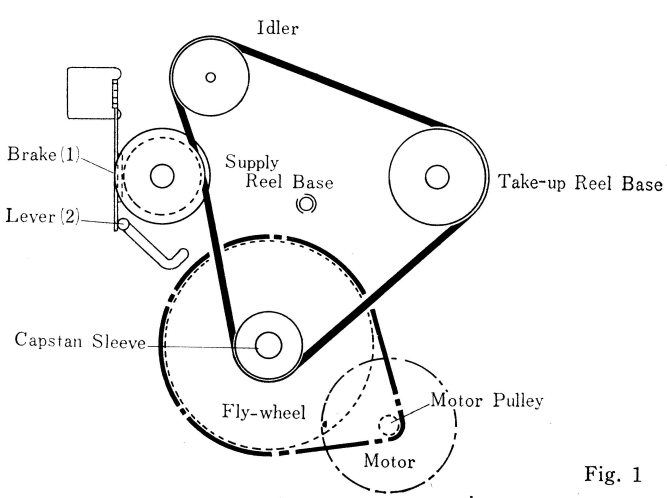

Fig. 1

CIRCUIT DIAGRAM

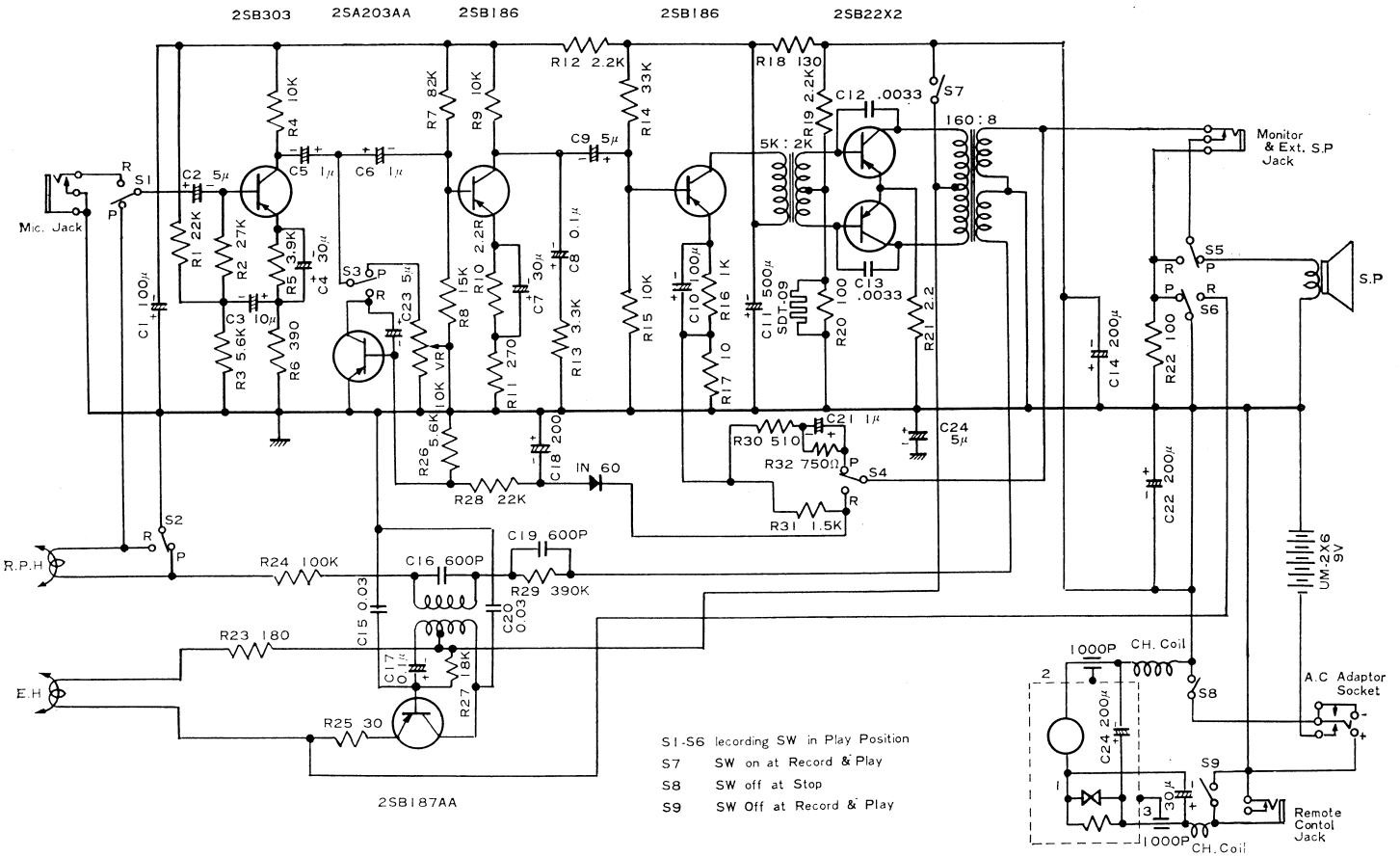

LOCATION OF MAIN PARTS

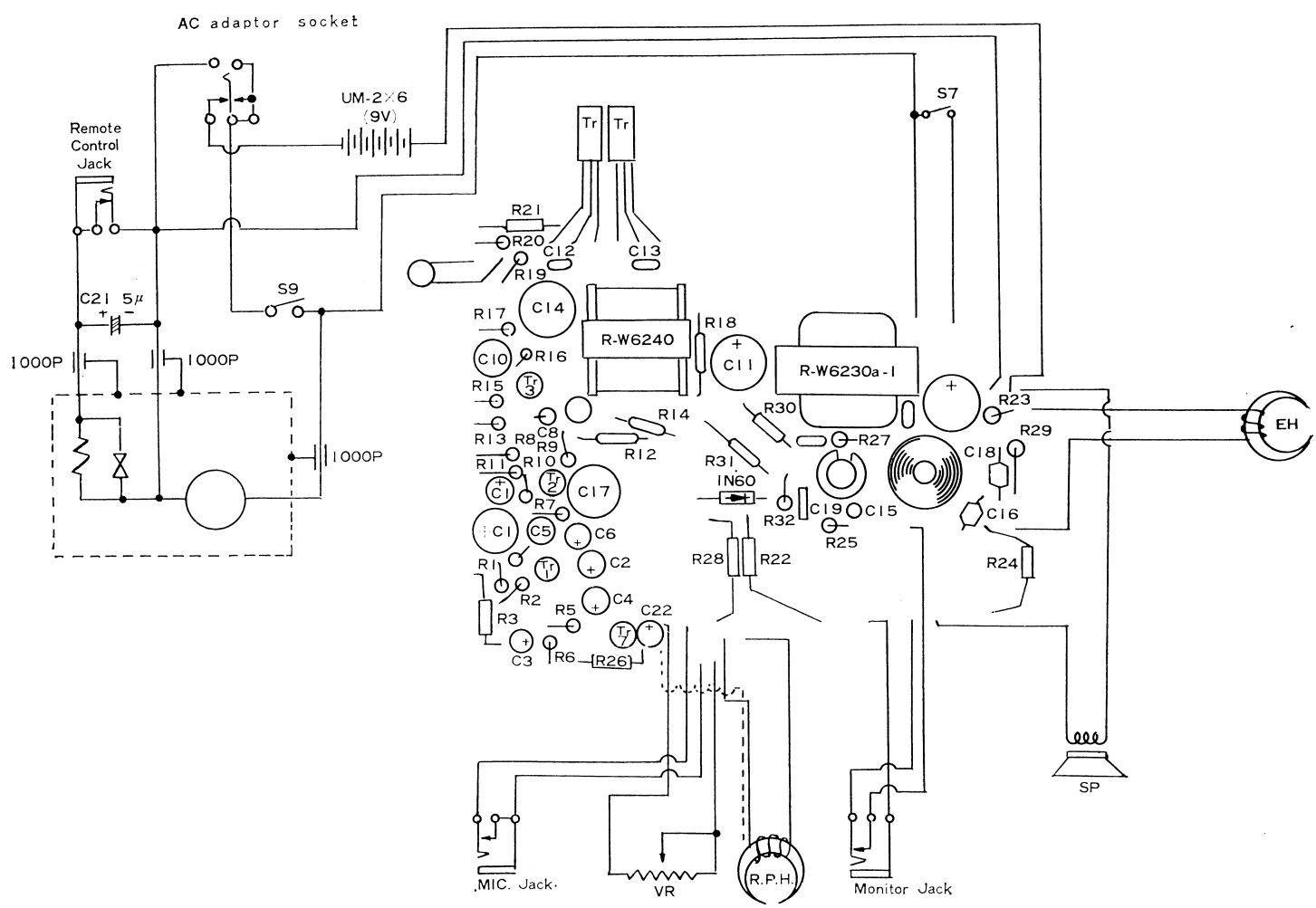

R-20025 Printed in Japan

Figure 1 shows the position of mechanism when the brake is applied. Although the brake is located only at the Supply Reel Base, the mechanism is specially designed to give satisfactory performance.

In case the brake fails to function properly at stop position, (1) adjust leaf spring for the brake mechanism, and (2) position of the brake operating bar. In this case, the brake must be applied fully to the supply reel base except at rapid winding.
At rapid winding, there must be an aperture of approximately 3 mm between the brake and the supply reel base. (fig. 1)

3) Fast Forward Mechanism

In rapid winding, the Idler will shift and the flat belt will detach from the supply reel base as shown in figure 2. At the same time the pulley under the reel base is pressed firmly to the reel base with felt by means of leaf spring and the spring of take-up reel. This will permit the transmission of torque.

In rapid winding, there should not be an aperture between the take-up reel base and its fixing screw.

In case an aperture is found at rapid winding or playback, use thicker nylon washer to improve the contact between the pulley and the reel base. (fig. 2, 3)

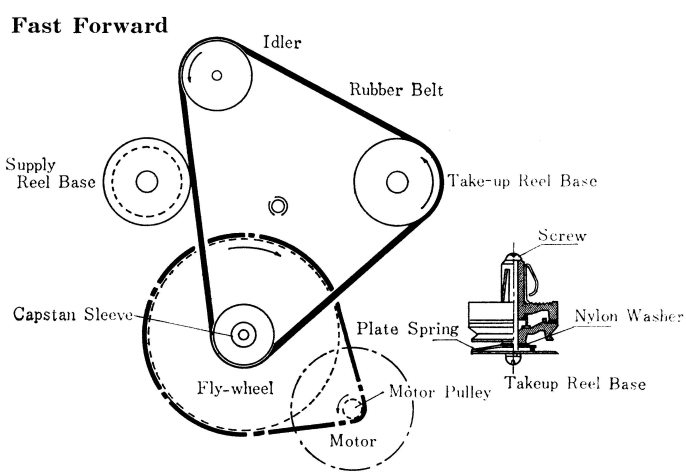

fig. 2

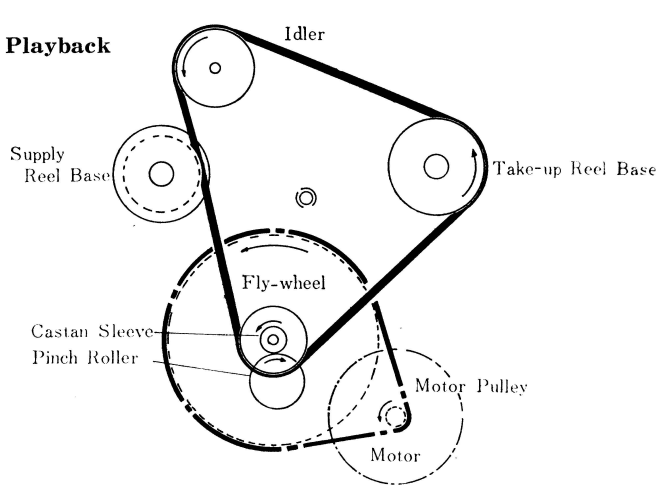

fig. 3

4) Rewinding Mechanism

Relatively strong torque may be felt when the take-up reel base is pressed by hand during rewinding. When the rotation is slow and weak, causes can be traced to slipping of the belt or shortage of lubricating oil in the flywheel, or reel base.

Check these points and repair. Figure 4 shows the rewinding state of mechanism. Take note that the driving belt fits snugly into the groove of the supply reel base.

In addition, examine the reel bases on both sides for some play on top and bottom. When there is no sufficient play, use thinner washers or remove the washers so as to insure smooth operation. (fig 4)

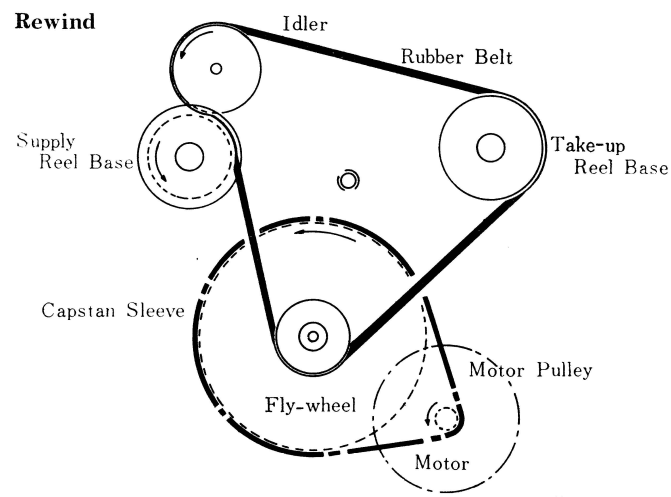

fig. 4

5) Playback Mechanism (Pinch Roller)

When the pressure of the pinch roller is weak, the recording tape may slip between the capstan and the pinch roller. Ideal pressure of the pinch roller is 200–300g (250g±50g) when the tape speed is 4.75 cm/sec. The adjustment is to be made by pinch lever spring.

In order to measure the pressure, load the machine with thin recording tape, and as illustrated in figure 5, pull the tension gauge away from the pinch roller so that the latter will separate from the capstan and read the gauge when the tape stops. (The recorder must be in playback state when the pressure is to be gauged.) (fig. 5)

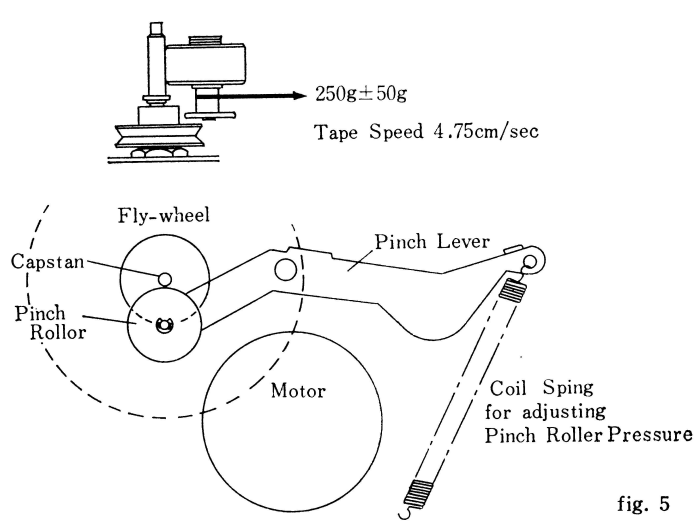

fig. 5

6) Head Pad

When the sound reproduction is uneven, or when the erasing is in sufficient, the cause may be traced to weak pressure of the pad or uneven pressure on the erasing head and playback head. In normal speed winding, the pad felt should be touching both heads. The pressure of the pad, as shown in figure 6 will show 20-25g when the tension gauge is placed between the pad (top part) and pulled in the direction of the arrow. At the above reading of the gauge, pad felt should be separated from the head.

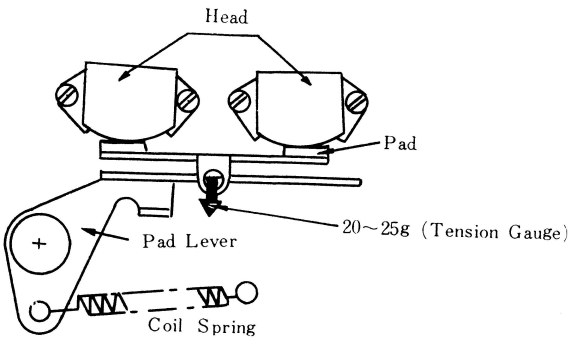

fig. 6

ADJUSTMENT OF HEADS

1. Position of Heads

Inadequate positioning of Erasing Head will cause insufficient erasing of the tape, or erasing of the upper and lower tracks at the same time although the upper track is intended to be erased.

In case of Recording and Playback Head, the power output of reproduction may be insufficient, or high tones will not be reproduced sufficiently, or the recordings of upper and lower tracks may be reproduced at the same time. The proper positions of the Heads are as shown in fig. 7, and the adjustment of the positions of the Heads is done by turning the Head Fixing Screws.

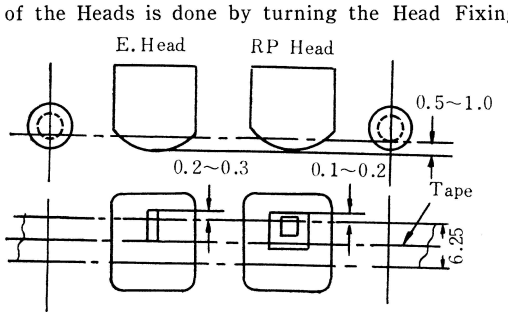

fig. 7

2. Angle of Head

Slanting of the Erasiug Head to either right or left will not cause any problems, but when this happens on the Recording/Playback Head the Reproduction Freqency will be influenced greatly. Fig. 8 shows the enlarged picture of the Recording/Playback Head from the front. The gap between the two poles should be perpendicular to the direction of the movement of the recording tape, otherwise the high tones will not be sufficiently reproduced.

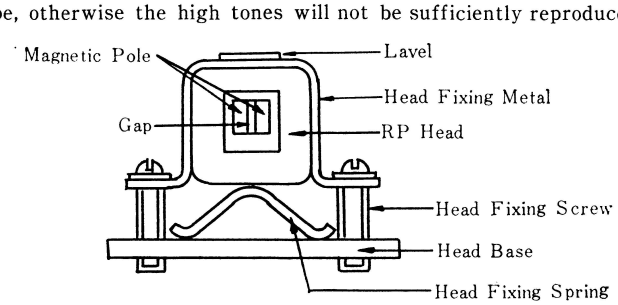

fig. 8

(Remarks)

* The tools (such as screwdrivers, etc.) used in adjusting the Head angle or installing the Head must be non-magnetic. In the event magnetized tools are used, the ferrous and permalloy parts located near the recording tape may become magnetized, and cause statics.

MAINTENANCE :

1. Storing

Before storing the recorder, make sure the "T" control lever is in stop condition, and then close the lid. When storing for a long period, take out the batteries, as batteries may leak and cause damage to the mechanism.

2. Lubrication

This recorder needs little oiling, and in addition rotating shafts are equipped with lubrication device. Excessive lubrication may cause the oil to flow to the rubber part of the belt or the pinch roller and cause slipping.

To lubricate, you should use an oiler, and an oiler stylus should be #½. This table shows the lubricating spots and using oil or grease.

fig. 9

	Quantity	Oil	Remarks
Flywheel	2-3 drops	Spindle #150	Between shaft and shaft base.
Shaft (R-14168)	1-2	Spindle #150	Reel shaft.
Shaft (R-14169)	1-2	Spindle #150	Reel Shaft.
Shaft (R-14170)	1	Spindle #150	Pulley. (R-34139)
Lever (R-112450)		Rimax	Upper chassis on which balls move.
Lever (R-112441)		Rimax.	Operation lever.
〃 (R-14171)			
Lever (R-112450)		Molhydenum sulphide	Chassis boss. (R-241065)
Boss (R-241067)		〃	Chassis.
Lever (R-112448)		〃	Between supporting point and chassis.
Lever (R-112445)		〃	Chassis.
Lever (R-112447)		〃	Mounting Metal. (R-112444)
Lever (R-112443)		〃	Chassis.

2. 1 Lubricating the rotating parts

Among the rotating parts the Motor and Flywheel are designed to last more than 1,000 hours without lubrication. Oiling, therefore, will not be necessary, as it may cause drop in efficiency.

(1) Pinch Roller

Remove the "C" washer on top of the pinch roller and pull out the pinch roller to clean the shaft and shaft bearing. Then lubricate a little.

(2) Idler

Remove the nylon washer of the idler shaft to pull out the idler. After that clean the idler shaft and shaft bearing satisfactory. Lubricate a little.

(3) Takeup Reel Base and Reel Base Pulley

To lubricate, it is necessary to remove the takeup reel base and reel base pulley. First remove the(+) screw on top of the shaft

by turning it counter-clockwise, and pull out the takeup reel and reel base pulley. When removing, care should be taken not to lose or drop the spring and washer.

When applying oil, do not put oil to the felt between the reel base and reel base pulley.

In case oil should adhere to the felt, press it with a piece of cloth soaked in carbon tetrachloride and absorb the oil.

(4) Supply Reel Base

Following the above procedure in cleaning and lubrication.

(5) Flywheel

The shaft base mechanism of this recorder's flywheel is as illustrated in figure 10. To lubricate the flywheel mechanism as it is will be difficult.

First remove the rubber belt from the flywheel pulley and rotate the flywheel to determine whether it turns smoothly. Then disassemble the mechanism and apply lubricant.

The flywheel shaft of this recorder unit is provided with oil groove which holds sufficient quantity of oil to permit long hours of operation without lubrication.

To disassemble, observe the following procedures:
Remove the rubber washer and "C" washer from the flywheel shaft. Remove the pulley after loosening the fixing screw of the pulley. Turn the chassis upside down and remove the mounting screw so that the flywheel can be easily pulled out.

Clean the flywheel shaft and the shaft bearing thoroughly with a piece of cloth or gauze soaked with carbon tetrachloride or alcohol. After drying, apply lubricating oil.

Do not apply excessive quantity of oil, as this may cause excess oil to adhere to the rubber belt or idler, resulting in wow and flutter. (fig. 10)

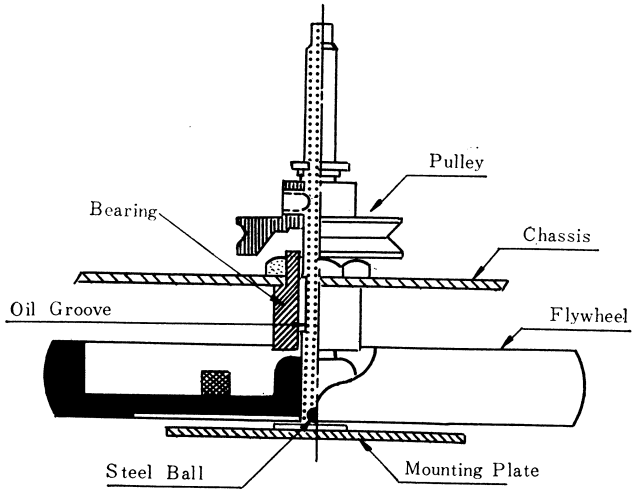

(6) Other Lubricating Points

fig. 10

To keep smooth sliding contact between slide and chassis, there applied grease. Clean all surface before lubricating, and apply a few drops of #20 machine oil to all bearings and rotating brushings.

Apply a thin film of light nonhardening grease to all sliding surface and detent rollers. Always wipe off excess oil or grease the from parts that have been lubricated.

Caution: Oil and grease must be kept off from driving surfaces as well as any part which may transfer oil or grease. Use alcohol to remove oil and grease from drive belt, idlerwheels, brake drums and all other driving surfaces.

3. Cleaning of tape contact parts

The recording tape passes through tape guides, erasing head, recording and playback head, pad, capstan, pinch roller and tape guide. When dusts or ferrous powder from the tape adhere to above mentioned places, it will cauce insufficient erasing, unsatisfactory recording, insufficient high tones, lack of volume, or slipping. Careful cleaning will be necessary. Clean the tape guides, Heads, Pinch Roller and Capstan with gauze or a piece of cloth soaked with carbon tetrachloride. Do not use adsorbent cotton as the lints will adhere.

Caution: Avoid getting head cleaner on any plastic surface clean the capstan, pressure roller pads and all tape guides with alcohol using a soft but free cloth.

SUGGESTIONS FOR MECHANICAL TROUBLES:

Trouble	Cause	Repair
1. Capstan fails to rotate.	*Defect of Motor 1. Open in Motor Coil or defective contact of Carbon Brush.	1. Replace. *If Capstan turns in Rapid Winding, or Rewinding, but falls in Recording or Playback, the cause is the defective contact of Governer. Terminal resistance of normally operating Governer at both ends should be O ohm.
	2. Burnt metal bearing.	2. Replace.
	*Defect of Transmission Mechanism: 3. Skipping of Motor Pulley.	3. Tighten the screw.
	4. Oil on Flywheel rubber.	4. Clean. *Wipe with Alcohol or Carbon Tetra Chloride.
	5. Lack of oil on capstan shaft.	5. Lubricate *Replace Flywheel together with shaft bearing.
	6. Defective motor spring.	6. Replace or adjust.
2. Slow rotation.	*Defect of Motor 1. Burnt metal bearing.	1. Replace or lubricate. *Turn screw under Flywheel (under chassis) clockwise and put watch oil. The screw is set with adhesive, so warm it first with soldering iron etc.
	*Defect of Transmission mechanism. 2. (Same as 3-6)	
	3. Lack of oil in Winding Idler.	3. Lubricate.
	4. Lack of oil in Winding Reel Pulley.	4. Lubricate.
3. Presence of wow and flutter.	*Defect of Motor 1. Defective function of Governer.	1. Lubricator replace.
	*Defect of Transmission Mechanism 2. (Same as 3-10)	
	3. Alien objects on flywheel rubber.	3. Clean. (Same as 4)
	4. Deterioration of flywheel rubber.	4. Replace. (Same as 5)
	*Defective movement of Recording Tape. 5. Defective back tension on Rewinding Reel.	5. Replace.
	6. Defective pressure of Pinch Rollcr.	6. Adjust Pinch Lever Spring.
	7. Change of quality or shape of Pinch Roller.	7. Replace.
	8. Adherence of dust on contact points of recording tape.	8. Clean. (Wipe with Carbon Tetra Chloride)

Trouble	Cause	Repair
4. Unsatisfactory winding.	*Reel Base does not rotate even when the tape is not mounted. 1. Broken belt or change of quality. 2. Weak transmission of Winding Idler & Winding Pulley. 3. (Same as 1–10, 16 & 19). *Reel Base does not rotate when the tape is monnted. 4. Weak pressure of Rapid Forwarding Roller, Reel Base & Reel Base Pulley. 5. Lack of oil on Reel Base.	1. Replace belt. 2. Adjust Winding Idler Spring. 4. Adjust Rapid Winding Roller Spring. 5. Lubricate.
5. Unsatisfactory rewinding.	*Defect of Brake 1. Peeled Brake Shoe. 2. Brake Shoe touching Winding Reel Base Pulley. 3. Defective adjustment. 4. (Same as 29).	1. Use adhesive. 2. Adjust the size of Brake shoe. *In case of Right Reel. 3. Adjust Spring. *In case of Left Reel Brake, adjust Brake Function Disc D.
6. Brake does not function.	*Defect of Brake 1. Peeled Brake Shoe. 2. Brake Shoe touching Winding Reel Base Pulley. 3. Defective adjustment. 4. (Same as 29)	1. Use adhesive. 2. Adjust the size of Brake Shoe. *In case of Right Reel. 3. Adjust Spring. *In case of Left Reel Brake, adjust Brake Function Disc D.
7. Unable to record.	*Switch fails to function the Recording Circuit. 1. Defective joint of RP Slide Lever B and C.	1. Tighten screw. *In adjusting the screw, press Rec. Button, and adjust the position of switch with over stroke so that RP Slide Switch will become Recording position.
8. Unable to erase.	1. Weak pressure of Head Pad.	1. Adjust. *Loosen the Pad Fastening Screw, and bring the Pad forward or move the head forward, or replace felt with thicker one.
9. Uneven winding of tape.	*During Recording or Playback 1. Reel Shaft is not perpendicular to operating panel. 2. Weak Takeup Reel Base Pulley Spring. 3. Pressure difference at top & bottom of Pinch Roller & Capstan.	1. Replace. *Replacement is extremely difficult as Reel Shaft is fastened tight onto chassis. 2. Adjust spring. 3. Replace Pinch Lever, or adjust.

Trouble	Cause	Repair
1. Motor does not turn even at Playback and Record.	1. Defective Adaptor Socket. 2. Defective Power Switch(S9). 3. S9 does not turn on. 4. Inoperative Filter Circuit (C14,20) 5. Defective Remote Socket or chassis contacting. 6. Defective DC motor.	1. Check and replace. 2. - ditto - 3. Adjust mechanism so that it turns on. 4. Replace. 5. Check and rebalance or repair. 6. Check and replace.
2. Unable to record and playback.	1. Inoperative Amp. Circuit. 2. Defective Recording/Playback Head or R24,R29. 3. Defective contact between Tape & Record/Playback Head. 4. Broken Lead Wire between Head & Amplifier. 5. Switch S7 does not turn on. 6. Bad contact of Extension Jack.	1. Check voltage and amplification gain of each part. 2. Replace if broken wire of short circuit. 3. Check the position of tape. Check and clean the contact points of Head. 4. Check inductance or insulation. 5. Adjust or replace. 6. Check, repair or replace.
3. Plays back but cannot record.	1. Defective RP Switch. 2. Defective Microphone. 3. Defective Mike Jack. 4. Defective R1, R2, R3 or broken wire. 5. Broken wire of R29, R24. 6. Bad wiring and rated current circuit (R29, C19, C16) from last stage amplification to Head. 7. Bad oscillation circuit. 8. OPT 3rd stage broken wire.	1. Check Switch Mechanism, Switch Contact, and adjust. 2. Check whether Mike is bad or broken Cord. 3. Check, adjust or replace. 4. Check and replace. 5. - ditto - 6. Check each element and wiring, and replce. 7. Check each element and confirm bias current drain. 8. Check and replace.
4. Records but does not playback.	1. Defective RP switch, or bad contact. 2. Defective speaker or broken wiring. 3. Defective contact of EXT. SP jack. 4. Broken wire of short circuit in power output transformer. 5. Magnetized erasing head.	1. Check RP Switch mechanism and RP switch. 2. Connect Amplifier or Speaker to EXT. SP jack. 3. Check, adjust or replace. 4. Check if the meter moves in recording, and replace. 5. Erase with de-magnetizer.
5. Excessive noises and statics.	1. Bad contact or Volume. 2. Defective Transistor. (Especially Tr-1) 3. Deterioration of circuit element, or contact with adjacent element. Bad soldering. 4. Magnetized head. 5. Distortion of oscillation wave. 6. Bad earth of printed circuit. 7. If noise loud when connecting Mike, C2 or Microphone bad. 8. Filter circuit(C1,C11,C14) capacity poor.	1. Check and replace. 2. Check and replace. 3. Check and adjust or replace. 4. Erase with de-magnetizer. 5. Check and adjust circuit elements. 6. Detect and replace. 7. Replace. 8. Check and replace.

Trouble	Cause	Repair
6 Bad Tones.	1. Defective circuit element or Transistor. 2. Inadequate High Frequency Bias. 3. Bad contact of Tape and Head. 4. Head worn down. 5. Defective Microphone. 6. Defective Speaker. 7. Defective Tape Pad.	1. Check voltage gain of each part. 2. Adjust bias. 3. Check positioning of tape or clean the contacting part of Head. 4. Replace. 5. Replace. 6. Compare by plugging another speaker in to EXT SP jack, Replace. 7. Check, and repair.
7. Lack of High Tone.	1. Head not perpendicular. 2. Big capacity of C12 or C13. 3. Poor presure in Record/Playback Head Pad. 4. Defective AC biasing oscillator circuit	1. Check and adjust. 2. Check. 3. Adjust. 4. Adjust to get 700 μA.
8. Excessive High Tone	1. Poor capacity of C12 or C13 Broken wire in R13, C8 circuit.	1. Check.
9. Unable to erase	1. Bad positioning of Erasing Head. 2. Bad contact or Tape & Erasing Head. 3. Lack of erasing current.	1. Adjust position. 2. Adjust and clean. 3. Check and replace. Erasing Head.
10. Cross talk between top and bottom tracks.	1. Bad positioning of Tape Guide and wobbling of Tape due to slanting of Head. 2. Bad positioning of top & bottom of Head.	1. Adjust Tape Guide Adjust Head position. 2. Adjust height of head.
11. Poor Volume	1. Defective circuit element or transistor. 2. Defective Bias oscillator circuit. 3. Circuit element shortage, broken wire or bad soldering. 4. Defective Head, Mic. or Speaker.	1. Check voltage gain of each part. 2. Check and adjust. 3. Check and repair or replace. 4. Check and replace.

PARTS LIST

Stock No.	Description	Q'ty
R-31634f	—Panel	1
R-21990	—Insert nut	2
R-24991	—Insert nut	1
R-24732	—Insert nut	2
R-31635a	Lid	1
R-31636e	Lid-back	1
R-32519a	Lid	1
R-39300	Cover	1
R-39254	Decoration metal	1
R-261213a	Badge	1
R-261214	Badge	1
R-261205a	Panel	1
R-261280a	Panel	1
R-261281a	Panel	1
R-261282a	Metal strap	1
R-26691	Label	1
R-471012a	Circuit diagram	1
R-44229	Cushion	6
	Speaker net	1
	Felt	2
	Felt	1
	Felt-washer	4
	Felt-washer	1
R-39281	Sheet	1
	Sheet	1
R-112456	Press metal	1
R-241014a	Handle metal	2
R-S81153a	—Handle complete	1
R-112568	—Handle	1
R-36193a	—Cover	1
R-44229	Cushion	1
R-241077	Tip	1
R-35216	Ribbon	1
	Washer	2
R-43143b	Sheet	1
R-24678b	Knob-operation lever	1
R-32521b	Button-record button	1
R-32520d	Mounting base	1
R-471011a	Battery instruction paper	1
R-39264b	Knob-volume control	1
R-47962a	Indication board	1
R112485b	Mounting metal	1
R-112487a	Mounting metal	1
R-39201a	Base-slide switch	1
R-41454b	Printed wiring board	1
R-13075	Plate spring	2
R-25144	Terminal panel	6
R-15141	Pin	2
	Tube	1
R-25260	Mounting metal	1
	Insulation tape	1
R-S3008	Lug	1

ELECTRICAL PARTS

R-S6336e	Microphone complete	1
R-R11649	Volume control	1
R-W6230A	Output transformer	1
R-W6240B	Input transformer	1
R-W8144	OSC coil	1
R-C9126	Electrolytic capacitor 0.1μ, 10V C8, C17	2
R-C9115	Electrolytic capacitor 1μ, 10V C21	1
R-C9160	Electrolytic capacitor 1μ, 10V C5, C6	1
R-C9078	Electrolytic capacitor 5μ, 6V C2, C9, C23	3
R-C9132	Electrolytic capacitor 10μ, 3V C3	1
R-C9133	Electrolytic capacitor 30μ, 3V C4, C7	2
R-C9134	Electrolytic capacitor 100μ, 3V C10	1
R-C9145	Electrolytic capacitor 100μ, 10V C1	1
R-C9146	Electrolytic capacitor 200μ, 10V C24, C14, C22	3
R-C9143	Electrolytic capacitor 500μ, 3V C18	1
R-C9162	Electrolytic capacitor 500μF, 10V C11	1
R-S6367a	Speaker	1
R-S2139	Jack-mic., ext. SP	2
R-S2803	Jack remote switch	1
R-261193	Fin	1
R-32126b	3″ reel	1
	Splicing tape	1
R-S8516	Battery terminal complete-plus	1
R-8517a	Battery terminal complete minus	1
R-S8479b	3″ B tape	1
	Diode-1N60 or 1S188	1
	Thermistor-SDT-09	1
	Transistor-2SB303	1
	Transistor-2SB186A	1
	Transistor-2SB186	1
	Transistor-2SB187AA	1
	Transistor-2SB22	2
	Transistor-2SA203AA	1

Stock No.	Description	Q'ty

RESISTORS

R17	10 ohm		1
R20, R22	100 〃		2
R18	130 〃		1
R23	180 〃		1
R11	270 〃		1
R6	390 〃		1
R16	1k 〃		1
R31	1.5k 〃		1
R10, R12	2.2k 〃		2
R13	3.3k 〃		1
R3, R26	5.6k 〃		2
R4, R9, R15	10k 〃		3
R8	15k 〃		1
R1, R28	22k 〃		2
R2,	27k 〃		2
R14	33k 〃		1
R7	82k 〃		1
R5	3.9k 〃		1
R32	750 〃		1
R21	2.2 〃	5%	1
R25	30 〃	5%	1
R30	510 〃	5%	1
R19	2.2k 〃	5%	1
R24	100k 〃	5%	1
R29	390k 〃	5%	1
R27	18K 〃		1

CAPACITORS

C12, C13	Mylar, Square type, 0.0033 mfd. +30 - 20% 50WV	2
C15, C20	Mylar, Square type, 0.03mfd., 50WV	2
C16, C19	Styrol, Tubular, 600pfd., +10, −10% 125WV	2

TM-13 MECHANISM

TC-13	Mechanism complete	1

CHASSIS

R-112457f	Chassis	1
R-44247	Belt	1
R-44248	Belt	1
R-112451	Lever	1
R-112452	Mounting Metal	1
R-112453	Lever	1
R-112454	Mounting metal	1
R-15231	Spring	1
R-241001	Spacer	1
R-S4371	Spring switch	1
R-S4372	Spring switch	1
	Felt	1
R-S2113	Socket	1
	Felt	2
R-S3063	Lug	1

FLYWHEEL

R-S81088	Flywheel complete	1
R-28101	—Flywheel	1
R-12257a	—Shaft	1
	—Felt	1
	—Ball	1
R-34135	Pulley	1
R-241064a	Shaft bearing	1
R-112446	Mounting Metal	1
R-S81152a	Capstan complete	1
R-241075a	—Capstan	1
R-241076	—Special screw	1
R-S7069	Special nut	1
	Fiber	1
	Cushion	1

REEL BASE (right, left)

R-34137b	Reel base	1
R-14168b	Shaft	1
R-25250a	Plate spring	1
	Felt	1
R-12288b	Special spring	1
	Washer	1
R-128016	Special spring	1
R-34136b	Reel base	1
R-34134a	Pulley	1
R-14168	Shaft	1

Stock No.	Description	Q'ty
R-128016	Special spring	1
	Felt	1
R-25249a	Plate spring	1
R-15303	Coil spring	1

PINCH ROLLER

R-44246b	Roller	1
R-241002a	Shaft bearing	1
R-14169a	Shaft	1
R-112448	Lever	1
R-128001a	Shaft	1
R-241074	Spacer	1

HEAD PAD

R-112444a	Mounting metal	
R-112447	Lever	1
R-25201	Pad	1
	Felt	1
R-24763a	Shaft	1
R-S6825	Record playback head	1
R-S6357	Erase head	1
R-25187b	Plate spring	2
R-241320b	Tape guide	1
R-248037b	Tape guide	1

LEVER

R-112441a	Lever	1
R-14171	Lever	1
R-24997	Shaft	1
R-112445a	Lever	1
R-15232	Spring	1
R-241067	Spacer	1
R-24998a	Ring	1
R-241065d	Spacer	1
R-112450f	Lever	1
R-112443a	Lever	1
R-112442b	Slide	1
R-14170b	Shaft	1
R-34139d	Pulley	1
R-241321	Spacer	1
R-24763a	Spacer	1
	Ball	2
R"14129	Shaft	2
	Washer	1

Stock No.	Description	Q'ty

MOTOR

R-S5111e	DC motor	1
R-112458	Mounting metal	1
R-241009	Pully	1

COIL SPRING

R-15235a	Coil spring	1
R-15300	Coil spring	2

Description	Use	Q'ty
Dish tapping screw 2, 3×8	Fixing metal	1
Dish tapping screw 2, 3×8	Ribon	1
Hexagonal nut 3,3 3	Tip	1
Hexagonal nut 3,4 4	Handle metal	2
Spring washer 3	Tip	1
Spring washer, 4	Handle metal	2
Bolt nut washer 3	Ribon	1
〃 4×12×0.	Handle metal	2
Dish tapping screw 2, 3×25	Back lid	1
Dish small screw 3×30	Back lid	1
Spring washer 4	Operation knob	1
Dish small screw 3×6	Fixing metal R-112487	1
Dish small screw 3×8	Fixing metal R-112485	1
Dish small screw 3×8	Mounting base	1
Dish small screw 3×8	Mechanism and chassis	1
Spring washer 3	Mechanism and chassis	3
Spring washer 3	Mounting base	1
Spring washer 3	Mounting metal R-112485	2
Spring washer	Mounting metal R-112487	1
Bolt nut washer 3×10×0.5	Mounting base	1
〃 3×10×0.5	Mounting metal R-112485	2
Round small screw 2×6	Battery terminal	2
Spring washer 2	Battery terminal	2
Bolt nut washer 2	Battery terminal	2
Dish small screw 3×8	Fin	1
Spring washer 3	Fin	1
Hexagonal nut 3.2	Battery termnal	1
Bolt nut ᴍasher 4×10×1	Mounting base	1

INNER PARTS CONNECTION

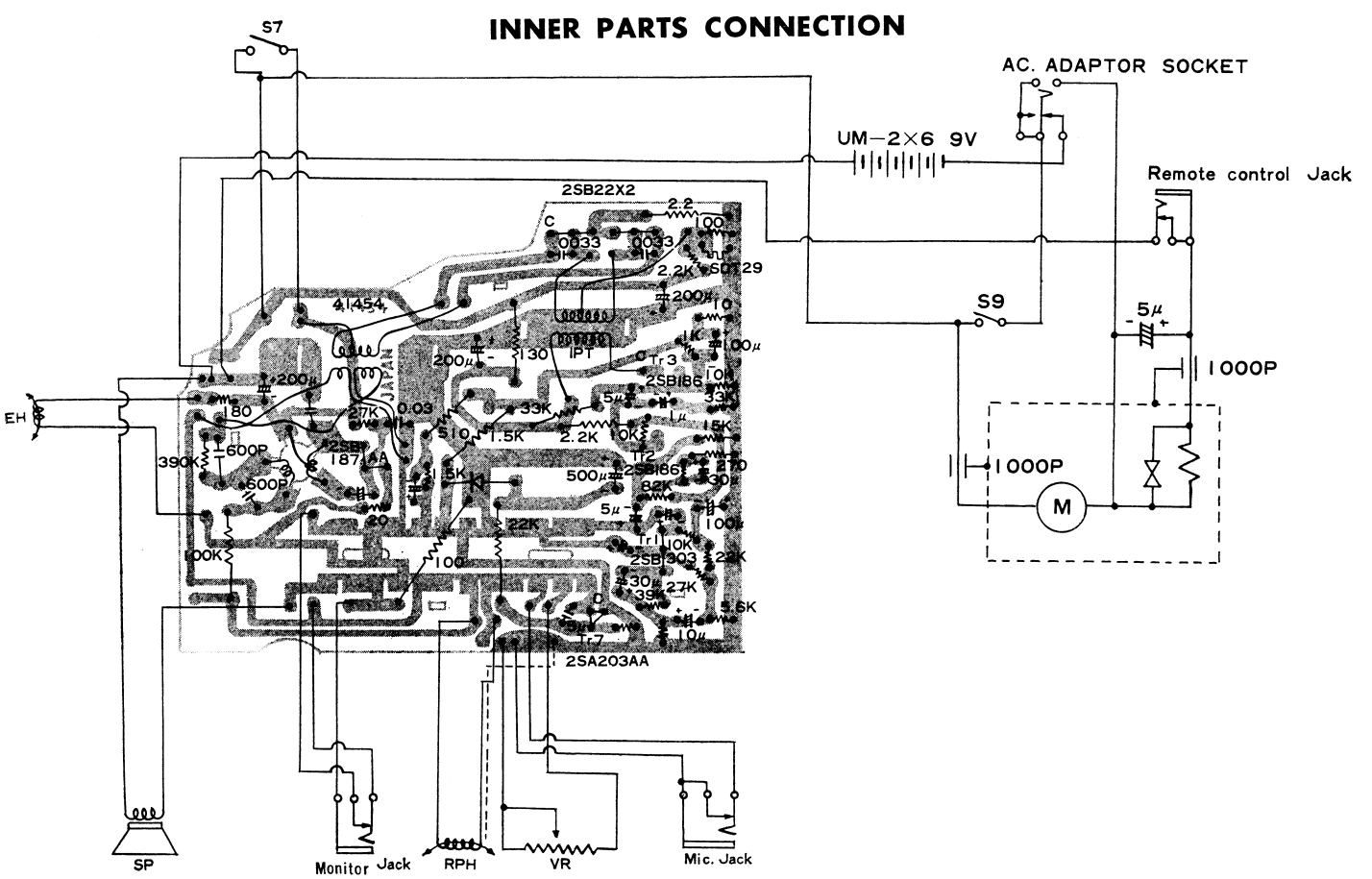

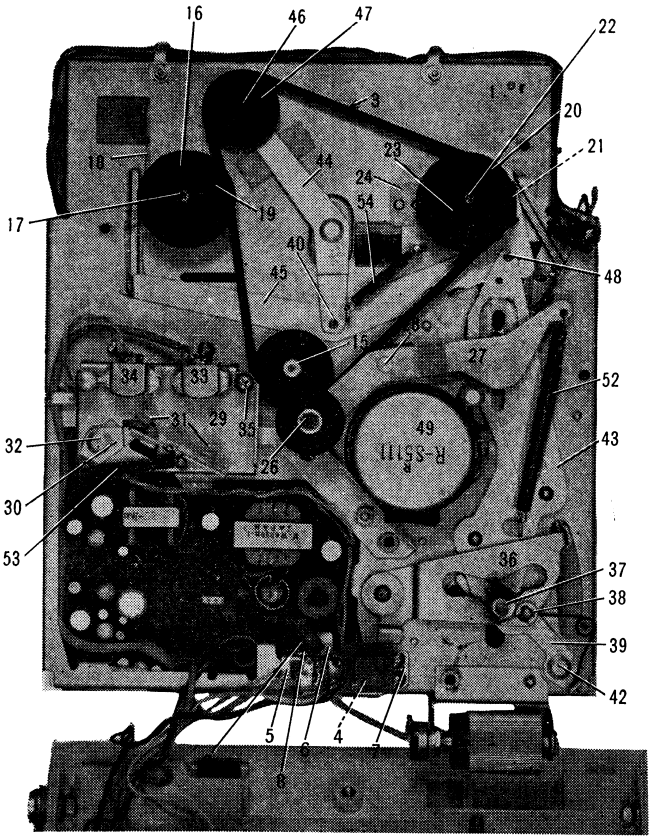

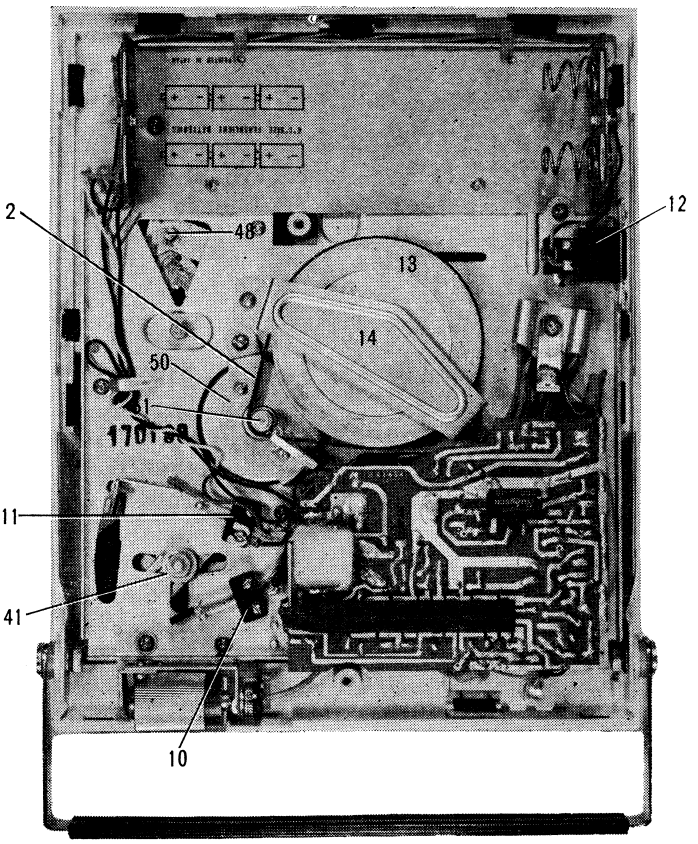

DESCRIPTION OF KEYED NUMBER

Key No.	Stock No.	Description
1	R-1124575f	Chassis
2	R-44247	Belt
3	R-44248	Belt
4	R-112451	Lever
5	R-112452	Mounting metal
6	R-112453	Lever
7	R-112454	Mounting metal
9	R-15231	Spring
9	R-241001	Spacer
10	R-S4371	Spring switch
11	R-S4372	Spring switch
12	R-S2113	Socket
13	R-S81088	Flywheel complete
14	R-112446	Mounting metal
15	R-S81152a	Capstan complete
16	R-34137b	Reel base
17	R-14168b	Shaft
18	R-25250a	Plate spring

Key No.	Stock No.	Description
19	R-12288b	Special spring
20	R-34136b	Reel base
21	R-34134a	Pulley
22	R-14168	Shaft
23	R-128016	Special spring
24	R-25249a	Plate spring
25	R-44246b	Roller
26	R-14169a	Shaft
27	R-112448	Lever
28	R-128001a	Shaft
29	R-112444a	Mounting metal
30	R-112447	Lever
31	R-25201	Pad
32	R-24763a	Shaft
33	R-S6825	Record playback head
34	R-S6357	Erase head
35	R-241320b	Tape guide
36	R-112441b	Lever

Key No.	Stock No.	Description
37	R-14171	Lever
38	R-24997	Shaft
39	R-112445a	Lever
40	R-15232	Spring
41	R-241067	Spacer
42	R-241065d	Spacer
43	R-112450f	Lever
44	R-112443a	Lever
45	R-112442b	Slide
46	R-14170b	Shaft
47	R-34139d	Pulley
48	R-14129	Shaft
49	R-S5111e	DC motor
50	R-112458	Mounting metal
51	R-241009	Pulley
52	R-15235a	Coil spring
53	R-15300	Coil spring
54	R-15300	Coil spring