ASTOR Model MP-C9G

A50a

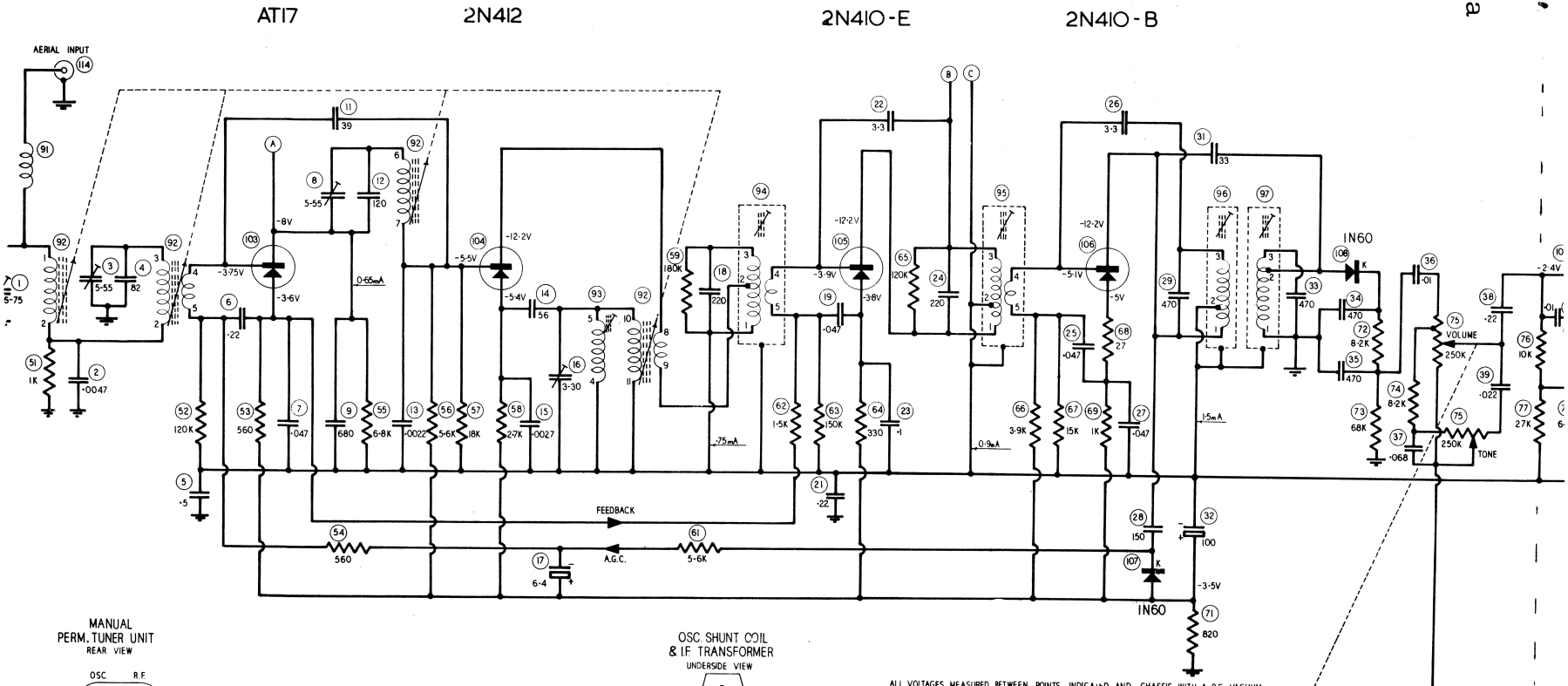

MANUAL
PERM. TUNER UNIT
REAR VIEW

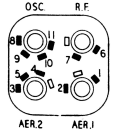

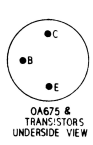

OA675 &
TRANSISTORS
UNDERSIDE VIEW

OSC. SHUNT COIL
& I.F. TRANSFORMER
UNDERSIDE VIEW

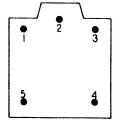

I.F. 455 Kcs

ALL VOLTAGES MEASURED BETWEEN POINTS INDICATED AND CHASSIS WITH A D.C. VACUUM TUBE VOLTMETER. NO INPUT SIGNAL.

NUMBERS ASSIGNED TO TERMINALS OF COILS AND TRANSFORMERS ARE TO FACILITATE CIRCUIT TRACING OR COMPONENT REPLACEMENT AND MAY NOT BE FOUND ON THE UNIT.

IMPORTANT REFER TO SERVICE DATA MP-C9G-1 FOR INSTRUCTIONS BEFORE ADJUSTING COLLECTOR CURRENT OF AC128'S.

NOTE:
(C) DENOTES TEST PINS

IN60 DIODE

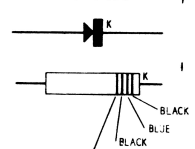

MODEL MP-C9G

MANUAL TUNING
POSITIVE TO CHASSIS

ASTOR Model MP-C9G

2N406 2N591 2-AC128

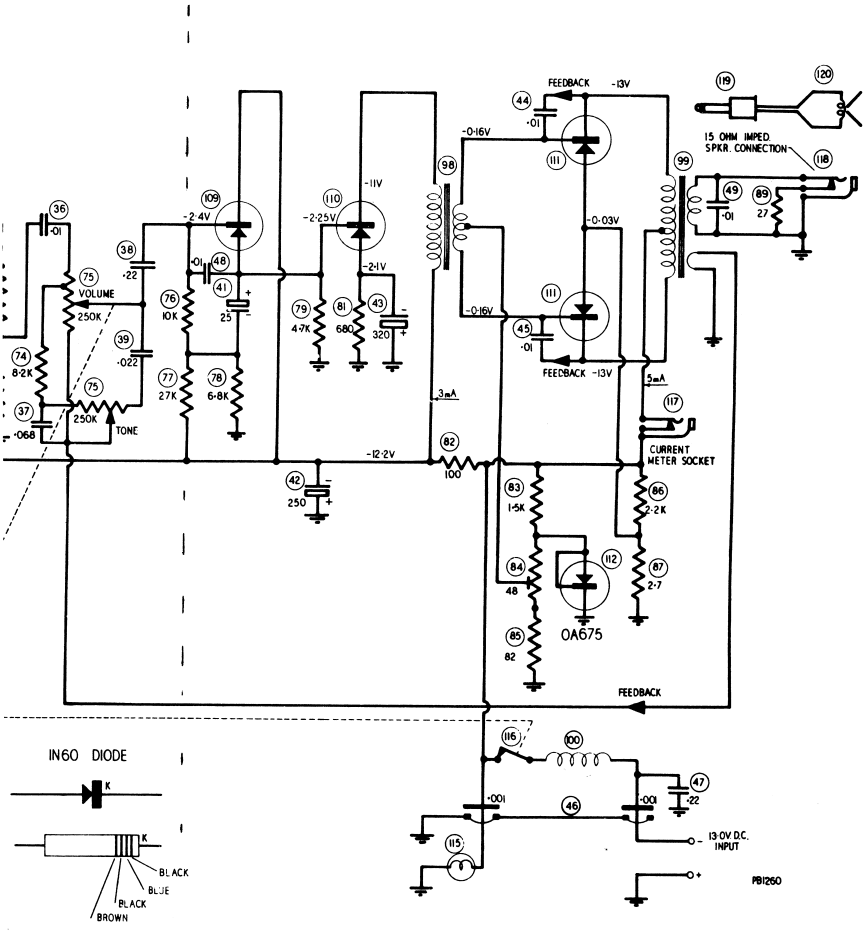

A50a

ASTOR Model MP-C9G

ALIGNMENT PROCEDURE

EQUIPMENT

Signal Generator - modulated 400 cps
Output Meter - 15 Ohms Impedance
Generator Series Capacitor - 1mF Part No. 4006-005-03. for IF alignment
IF Attenuator - Part No. 4121-014-01
Dummy Aerial - 65pF Part No. 4121-009-01
Alignment Tools

(a) Chisel Point Type: Part No. 4121-005-01 for trimmer capacitor adjustment

(b) Flat Metal Blade Type: Part No. 4121-001-01 for I. F. T. and Osc. shunt coil adjustment.

(c) Tuning Unit Iron Core Adjustor: Part No. 4121-008-01

(d) Alignment Gauge: Part No. 4121-023-02 for tuner 1000 Kc/s position.

Collector Current Meter Connection - Jack plug Part No. 7171-015-02

CONDITIONS

Remove screws and slide can off receiver.
Volume Control - maximum (fully clockwise)
Tone Control - maximum treble (fully clockwise)
Output Level - 50 milliwatts, output meter reading with speaker voice coil disconnected.
Output Meter Connection - **Socket adjacent to receiver battery lead entry. Use plug Part No. 7171-015-02 or use original plug and leads from speaker.**
Supply Voltage and Connection - **13.0V DC. Connect positive supply lead to chassis and negative lead to fuse holder lead.**

INTERMEDIATE FREQUENCY TRANSFORMER ALIGNMENT

Turn tuning control until perm. tuner iron cores are out of the coil formers. Insert 1mF capacitor in series with generator "hot" lead.

Oper. No.	Generator Connection	Generator Frequency	Instructions
1.	To test pin "B" (term 3 of 2nd I. F. T.)	455 Kc/s	Adjust iron core of 4th IF trans for max. output
2.	as Oper. 1.	455 Kc/s	Adjust iron core of 3rd IF. trans. for max. output
3.	Repeat operations 1 & 2		
4.	To Terminal 8. on tuner (mixer/osc. collector)	455 Kc/s	Adjust iron core of 2nd IF trans for max output
5.	To test pin "A" (RF. amp. collector)	455 Kc/s	Adjust iron core of 1st IF trans. for max. output

BROADCAST ALIGNMENT

If the receiver logging is satisfactory the signal circuits may be aligned as detailed.

1. Connect IF. attenuator to test pins "B" and "C" (resistor to pin "C")

2. Aerial Lead-in Socket - 65 pF. dummy in series — 1000 Kc/s — Tune receiver to generator frequency Adjust RF. and both aerial trimmer capacitors for max. output.

BROADCAST ALIGNMENT

When iron cores or tuning unit coil assy. have been replaced or if station logging is outside limits.

Oper. No.	Generator Connection	Generator Frequency	Instructions
1.	Connect IF. attenuator to test pins "B" and "C" (resistor to pin "C").		
2.	Turn perm. tuner against high frequency end of travel stop. Set all iron cores so that not less than 3/8" of adjusting shafts protrude forward of front face of core carriage.		
3.	To aerial Lead-in Socket. 65pF. dummy aerial series	1625 Kc/s	Adjust Osc. RF and both Aerial trimmer capacitors for max. output.
4.	Refer diagram. Place the 1000 Kc/s alignment gauge Part No. 4121-023-01 or alternatively a flat piece of metal 0.39" wide between the core carriage and loose collar. Gently turn tuning spindle until gauge is located squarely between collar and carriage.		
5.	As oper. 3.	1000 Kc/s	With tuner set in position detailed, adjust Osc., RF. and both Aerial iron cores for maximum output.
6.	As oper. 3.	600 Kc/s	Rock tuning control through signal, adjust Osc. shunt coil iron core for max. output.
7.	Turn tuning control to low freq. end of travel (iron cores full in). Tune signal generator to receiver. The low freq. tuning limit should be between 510 and 528 Kc/s.		
8.	Repeat operations 4 and 5.		
9.	Align dial pointer.		

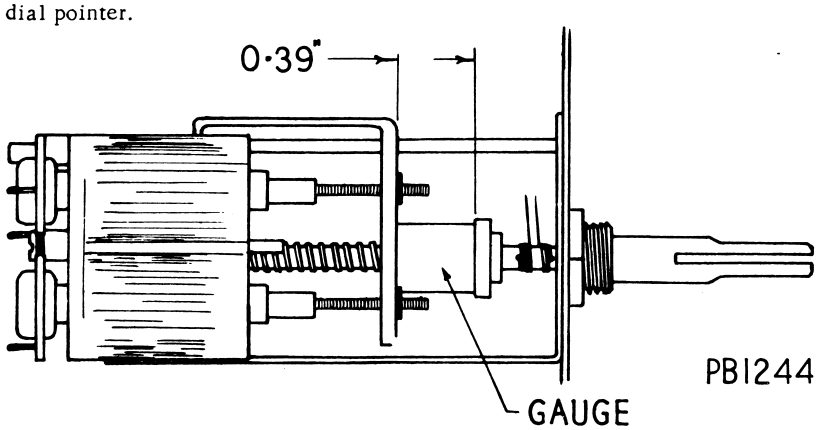

SETTING OF DIAL POINTER

Disconnect the IF attenuator.
Disconnect the generator cable from dummy aerial then connect 20 ft., of aerial wire to the dummy aerial terminal.

Accurately tune the receiver to a station marked on the dial near 1,000 Kc/s.

Slip dial pointer carriage assy. along guide rail until the centre of the pointer coincides with centre of the tuned station call sign.

Check dial logging and if necessary readjust pointer carriage.