TECHNICAL INFORMATION AND SERVICE DATA

207-C

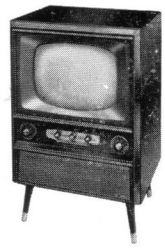

209-C

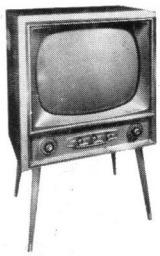

211-T

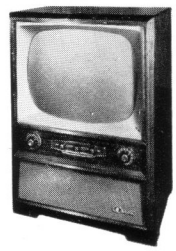

212-C

A.W.A. RADIOLA TELEVISION RECEIVER

Models 207-C, 209-C 211-T and 212-C

207-C, 209-C: 17 inch, 17 valves, A.C. operated
211-T, 212-C: 21 inch, 17 valves, A.C. operated

Issued by Amalgamated Wireless (Australasia) Ltd.

GENERAL DESCRIPTION

Models 207-C and 209-C are 17 inch, 17-valve, A.C.-operated Television Receivers.

Models 211-T and 212-C are 21 inch, 17-valve, A.C.-operated Television Receivers.

Features of design include: Cascode tuner; 3-stage video I.F. amplifier; High-level contrast control; Peak-level A.G.C.; Stabilised vertical hold; A.F.C. horizontal hold; 90° deflection; Electrostatic focus; Aluminised kinescope; Intercarrier F.M. system; Ratio detector; Twin loudspeakers; Tone control.

ELECTRICAL AND MECHANICAL SPECIFICATIONS

PICTURE SIZE: Approximately 261 sq. ins. on a 21ALP4A Kinescope. Approximately 154 sq. ins. on a 17AVP4A Kinescope.

TELEVISION CHANNELS: All 10 V.H.F. channels. (Refer Alignment Procedure)

INTERMEDIATE FREQUENCIES

Video I.F. Carrier Frequency ..... 36.0 Mc/s
Sound I.F. Carrier Frequency ..... 30.5 Mc/s

POWER CONSUMPTION: 180 watts max.

UNDISTORTED AUDIO POWER OUTPUT: 3 watts max.

LOUDSPEAKERS—

Model 207-C
9" x 6" Permanent Magnet No. 21191 and
7" x 5" Permanent Magnet No. 21034.

Models 209-C and 212-C
9" x 6" Permanent Magnet No. 21185 and
7" x 5" Permanent Magnet No. 21034.

Model 211-T
7" x 5" Permanent Magnet No. 21189 and
7" x 5" Permanent Magnet No. 21034.

V.C. Impedance of combination.
6—8 ohms at 400 c/s.

VALVE COMPLEMENT:

1	(V1)	Radiotron 6BQ7A	R.F. Amplifier
2	(V2)	Radiotron 6U8	R.F. Oscillator and Converter
3	(V101)	Radiotron 6AU6	Sound I.F.
4	(V102)	Radiotron 6AL5	Ratio Detector
5	(V103)	Radiotron 6BV7	A.F. Output
6	(V201)	Radiotron 6CB6	1st Video I.F.
7	(V202)	Radiotron 6U8	2nd Video I.F. and Sync. Separator
8	(V203)	Radiotron 6U8	3rd Video I.F. Video Detector and A.G.C.
9	(V204)	Radiotron 12BY7	Video Amplifier
10	(V205)	Radiotron 17AVP4-A	Kinescope
		Radiotron 21ALP4-A	Kinescope
11	(V301)	Radiotron 6SN7-GTA	Sync. Amplifier and Vertical Oscillator
12	(V302)	Radiotron 6AQ5	Vertical Output
13	(V401)	Radiotron 6SN7-GTA	Horizontal Control and Oscillator
14	(V402)	Radiotron 6DQ6-A	Horizontal Output
15	(V403)	Radiotron 6AX4-GT	Damper
16	(V404)	Radiotron 1B3-GT	High-Voltage Rectifier
17	(V405)	Radiotron 5AS4	Rectifier

Second Edition, 9/58

AERIAL INPUT IMPEDANCE 300 ohms balanced

VIDEO RESPONSE ..... To 4.25 Mc/s

FOCUS ..... Electrostatic (Low Voltage)

DEFLECTION ..... 90° Magnetic

SCANNING ..... Interlaced, 625 lines

HORIZONTAL SCANNING FREQUENCY ..... 15,625 c/s

VERTICAL SCANNING FREQUENCY ..... 50 c/s

PICTURE REPETITION RATE ..... 25 per second

OPERATING CONTROLS:

Channel Selector, Fine Tuning — Concentric.

Power/Tone Volume — Concentric.

Contrast, Vertical Hold, Brightness — Single Controls on Front Panel.

NON-OPERATING CONTROLS (not including R.F. and I.F. adjustments)

*Height .... screwdriver adjustment under front panel

*Vertical Linearity ..... screwdriver adjustment under front panel

*Horizontal Hold ..... screwdriver adjustment under front panel

Horizontal Drive..... rear chassis adjustment

Horizontal Sine Wave ..... top chassis adjustment

Horizontal Linearity ..... rear chassis adjustment

Width ..... rear chassis adjustment

A.G.C. Control ..... rear chassis adjustment

Focus ..... rear chassis adjustment

Picture Centring ..... above chassis adjustment

Deflection Yoke ..... above chassis adjustment

Ion Trap Magnet ..... above chassis adjustment

*These controls are accessible on removal of the three small knobs and the control panel.

HIGH VOLTAGE WARNING

OPERATION OF THIS RECEIVER OUTSIDE THE CABINET INVOLVES A SHOCK HAZARD FROM THE RECEIVER POWER SUPPLIES. WORK ON THE RECEIVER SHOULD NOT BE ATTEMPTED BY ANYONE WHO IS NOT THOROUGHLY FAMILIAR WITH THE PRECAUTIONS NECESSARY WHEN WORKING ON HIGH VOLTAGE EQUIPMENT. DO NOT OPERATE THE RECEIVER WITH THE HIGH VOLTAGE COMPARTMENT SHIELD REMOVED. MAKE SURE THAT THE EARTH STRAP BETWEEN THE CHASSIS AND THE KINESCOPE ASSEMBLY IS SECURELY FASTENED BEFORE TURNING THE RECEIVER ON.

KINESCOPE HANDLING PRECAUTIONS

DO NOT INSTALL, REMOVE OR HANDLE THE KINESCOPE IN ANY MANNER UNLESS SHATTER-PROOF GOGGLES ARE WORN. PEOPLE NOT SO EQUIPPED SHOULD BE KEPT AWAY WHILE HANDLING KINESCOPES. KEEP THE KINESCOPE AWAY FROM THE BODY WHILE HANDLING.

When the receiver has been switched off after operating for a time, the kinescope will retain a certain charge. Therefore it is advisable to discharge it before handling.

The kinescope bulb encloses a high vacuum and, due to its large surface area, is subjected to considerable air pressure. Therefore, kinescopes must be handled with more care than ordinary receiving valves.

The large end of the kinescope bulb, particularly that part at the rim of the viewing surface, must not be struck, scratched or subjected to more than moderate pressure at any time. When installing, if the valve sticks or fails to slip smoothly into its socket or deflecting yoke, do not force it, but investigate and remove the cause of the trouble. All Radiotron replacement kinescopes are packed in special cartons and should be left in the cartons until required for installation.

OPERATING INSTRUCTIONS.

The following adjustments are necessary when turning the receiver on for the first time:

1. Turn the POWER/TONE control clockwise to switch the receiver "ON" and set the control near the middle of its range. An interval of about one minute is necessary for the valves to heat before satisfactory operation is obtained.

2. Set the CHANNEL SELECTOR to the desired channel.

3. Turn the FINE TUNING control fully anti-clockwise.

4. Adjust the VOLUME control, until the desired volume is obtained.

5. Turn the BRIGHTNESS control to the extreme anti-clockwise position and then clockwise until a pattern appears on the screen.

6. Adjust the VERTICAL hold control until there is no vertical movement of the pattern.

7. Adjust the HORIZONTAL hold control until a picture is obtained.

8. Adjust the FINE TUNING, CONTRAST and BRIGHTNESS controls until the picture contrast and brightness is satisfactory.

9. After switching from one channel to another, it may be necessary to repeat adjustments 4 and 8.

10. When the set is switched on again after an idle period, it should not be necessary to repeat the adjustments unless the positions of the controls have been altered. If any adjustment is necessary, adjustment No. 8 is generally sufficient. However, if the controls have been altered it may be necessary to repeat adjustments 1 to 8.

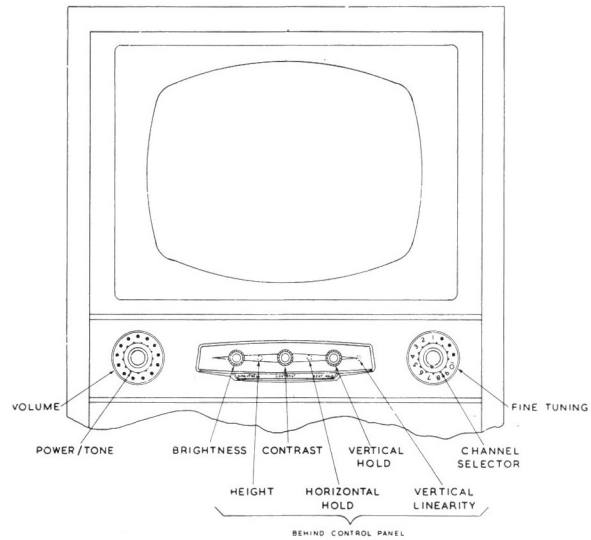

FIG 1 — RECEIVER OPERATING CONTROLS

INSTALLATION INSTRUCTIONS

UNPACKING

These receivers, complete with valves, are packed in cardboard cartons.

Take the receiver from the carton and remove the wooden packing block from the base of the cabinet.

Refer to the label inside the cabinet and make sure that the valves are in their correct sockets and pressed firmly down.

Check to see that the kinescope high voltage lead clip is in place.

Plug the power cable into a 200-240 volts, A.C. Power Point after making sure that the power cable is wired to the correct transformer tap. Refer to the instructions on the cabinet back.

It is possible to reach the under chassis wiring without removing the chassis. This is done by removing the louvred inspection plate underneath the chassis.

Connect the aerial to be used to the terminals at the rear of the cabinet. The in-built aerial may be used if conditions indicate that satisfactory reception will be obtained.

AERIAL INPUT

A 300 ohm aerial input is provided.

In locations where a very strong signal is likely to cause overloading of the receiver, an attenuator of the type shown in Fig. 7 should be used.

INITIAL OPERATION CHECK

Turn the Power/Tone control clockwise to switch the receiver "ON" and check all operations.

This instrument has been accurately aligned by the manufacturer with precision instruments and should require no further adjustments. However, a check should be made of all the various functions and if further adjustments are found necessary the following should be carried out.

ION TRAP MAGNET ADJUSTMENT

Set the ion trap magnet approximately in the position shown in Fig. 2. Adjust the magnet by moving it backward or forward. at the same time rotating it slightly around the neck of the kinescope, for the brightest raster on the screen. Reduce the brightness control setting until the raster is slightly above average brilliance. Re-adjust the ion trap magnet for maximum raster brilliance. The final touches of this adjustment should be made with the brightness control at the maximum clockwise position with which good line focus can be maintained.

DEFLECTION YOKE ADJUSTMENT (Fig. 2)

If the lines of the raster are not horizontal or squared with the kinescope, rotate the deflection yoke until this condition is obtained. Tighten the yoke clamp.

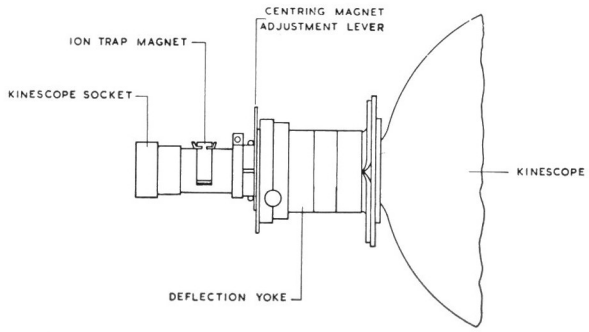

FIG. 2

FOCUS ADJUSTMENT (Fig. 3)

This adjustment has been made at the factory and it should only be necessary to re-adjust if the kinescope is replaced. In this case, adjust the focus control (R226) on the rear of the chassis until maximum definition of the line structure of the raster is obtained.

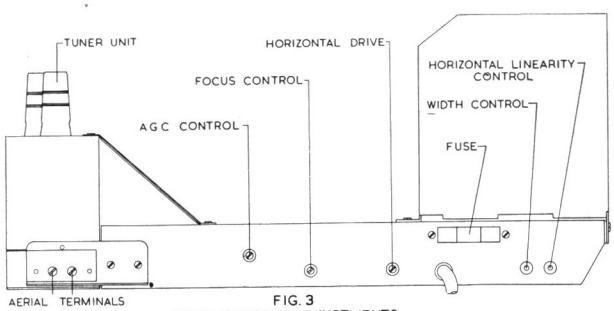

FIG. 3
REAR CHASSIS ADJUSTMENTS

PICTURE ADJUSTMENTS

It will now be necessary to obtain a test pattern or picture in order to make further adjustments.

When the Horizontal Oscillator and A.G.C. system are operating correctly, it should be possible to synchronise the picture at this point. However, if the A.G.C. control is not adjusted correctly and the receiver is overloading, it may be impossible to synchronise the picture.

If the receiver is overloading, turn R304 (on the rear of the chassis, Fig. 3) anti-clockwise until the receiver operates normally and the picture can be synchronised.

CHECK OF HORIZONTAL OSCILLATOR ADJUSTMENT

Turn the horizontal hold control to the extreme clockwise position. The picture will be out of synchronisation with a minimum of 12 bars slanting downwards towards the left. Turn the control slowly anti-clockwise. The number of diagonal black bars will gradually reduce and when only 1½ to 3 bars remain, the picture will synchronise with further slight anti-clockwise rotation of the control. The picture should remain synchronised for approximately two full turns of additional anti-clockwise rotation of the control. Continue to turn the control anti-clockwise until the picture falls out of synchronisation. Turning the control beyond the fall-out position should produce between 2 and 3 bars before motorboating occurs. Motorboating should occur before the extreme anti-clockwise position is reached.

When the receiver passes the above checks and the picture is normal and stable, the horizontal oscillator is correctly aligned. Therefore, the "Horizontal Oscillator Adjustment" may be by-passed.

HORIZONTAL OSCILLATOR ADJUSTMENT

If during the above check the receiver failed to hold synchronisation over two full anti-clockwise turns of the control from the pull-in point, the following adjustments are necessary.

Turning the horizontal hold control anti-clockwise will produce a number of bars before motorboating occurs. Adjust the horizontal sine wave coil (L401) until 3 or 4 bars are present before motorboating occurs, when the horizontal hold control is turned anti-clockwise from the fall-out point.

If it is impossible to synchronise the picture and the A.G.C. system is correctly adjusted, it will be necessary to align the Horizontal Oscillator by the method laid down in the Alignment Procedure.

CENTRING ADJUSTMENT

The electrostatic focus kinescope is equipped with special centring magnets. These are in the form of two discs mounted on the deflection yoke cap. When the magnets are rotated on the tube so that the levers are opposite, maximum centring effect is produced. To shift the picture, rotate one of the magnets with respect to the other. To shift the picture in the desired direction, rotate the entire centring magnet assembly on the neck of the kinescope. By alternately rotating one magnet with respect to the other, then rotating the entire assembly around the neck of the valve, correct centring of the picture can be obtained.

WIDTH, DRIVE AND HORIZONTAL LINEARITY ADJUSTMENTS

Adjustment of the horizontal drive control affects the high voltage applied to the kinescope. In order to obtain the highest possible voltage and hence the brightest and best focussed picture, turn the horizontal drive trimmer (C408) anti-clockwise until a bright white line begins to appear in approximately the centre of the raster. Then, turn the control clockwise until the line disappears.

Turn the horizontal linearity control (L403) clockwise until the picture begins to cramp on the right-hand side and then anti-clockwise until the cramping disappears and the best linearity is obtained.

Adjust the width control (L404) to obtain correct picture width. This is with the picture extending approximately ¾" on either side of the kinescope mask and normal picture brightness.

A slight re-adjustment of these three controls may now be necessary to obtain the best linearity.

Adjustments of the horizontal drive control affect the horizontal hold and locking range. Therefore, re-check the oscillator alignment.

HEIGHT AND VERTICAL LINEARITY ADJUSTMENTS

The height control (R324) has more effect on the bottom of the picture than the top, tending to give bottom stretch or cramp, depending on the setting of the control. The opposite effect is noticeable with variation of the vertical linearity control (R331) in that it tends to give top stretch or cramp depending on its position. Therefore, to adjust for height and linearity, the two controls should be adjusted in conjunction, so that approximately ½" of the picture extends beyond the top and bottom of the kinescope mask while maintaining the best linearity from top to bottom. The centring may have to be adjusted to obtain the above condition.

A.G.C. CONTROL

The A.G.C. control (R304) is adjusted at the factory for average receiver conditions; however, it is advisable to adjust it for individual conditions.

It should be noted that the A.G.C. control should not be set any further clockwise than is necessary to remove "snow." In cases of high signal level, where "snow" is not visible at any setting of the control, the latter should be left in its full anti-clockwise position.

CHASSIS REMOVAL

To remove the chassis from the cabinet for repairs proceed as follows:

Remove the control knobs by pulling them straight off their spindles.

Remove the cabinet back.

Disconnect the loudspeakers, aerial, yoke plug, high-voltage cable, kinescope cradle earthing strap, yoke clamp earth spring and kinescope socket.

The chassis is held in the cabinet by four bolts. Removal of these enables the chassis to be withdrawn.

Installing the chassis is the reversal of the above procedure.

KINESCOPE HANDLING PRECAUTIONS

Do not install, remove or handle the kinescope in any manner unless shatter-proof goggles are worn. People not so equipped should be kept away while handling kinescopes.

Keep the kinescope away from the body while handling.

REMOVAL AND INSTALLATION OF KINESCOPE

For model 212-C remove the chassis as described above.

For model 211-T remove the chassis as described above and both 7" x 5" speakers.

For models 207-C and 209-C disconnect the kinescope socket, yoke plug, high-voltage cable, kinescope cradle earthing strap and yoke clamp earth spring.

In all cases proceed as follows:—

Remove the three bolts holding the kinescope—one on the roof support and two on the side rails.

Gently slide the kinescope and cradle assembly out the back of the cabinet and place face down on a covered table to avoid scratching the glass surface.

Unclip the ion trap magnet from the neck of the kinescope.

Loosen the yoke clamp and slide the yoke and centring magnet assembly from the neck of the kinescope.

Loosen the holding screw(s) on the strap around the kinescope bulb and ease the cradle off the tube.

Replacing the kinescope is by reversing the removal procedure, making sure that the dust seal is in its correct position.

When viewed from the rear of the cabinet, the high-voltage contact on the kinescope should be on the right-hand side.

SAFETY GLASS REMOVAL

Remove the chassis and kinescope in the manner described above.

The mask and safety glass are retained by a wooden bar at the base of the mask. Remove the Philips-head screw securing this bar. Holding the mask and glass assembly in one hand, remove the wooden bar by sliding it to one side until the opposite end is free of its recess and the bar may then be lifted out. The mask and safety glass are then removed by allowing them to slide downwards and out.

Replacing the safety glass is the reversal of the above procedure.

REPLACEMENT OF FUSES

The 1.5A mains fuse is accessible on pulling out the drawer marked "Fuse" at the back of the chassis.

The 375 mA B+ fuse is only accessible on removal of the rear cover. Before removing this fuse, ensure that the receiver is switched off. Even when this is done there is a possibility of shock, if the fuse has blown, due to a charge retained by C419. To avoid this, short together the two fuse terminals before attempting to replace this fuse.

RECEIVER LOCATION

The owner should be advised of the importance of placing the receiver in the proper location in the room.

The location should be chosen to agree with the following—

Away from windows so that bright light will not shine directly on the screen or in the viewer's eyes. However, some illumination in the room is desirable.

To give easy access for operation and comfortable viewing.

To permit convenient connection of the external aerial.

Convenient to a power point.

To allow adequate ventilation.

ALIGNMENT PROCEDURE

TESTING INSTRUMENTS

To properly service the television receiver, it is recommended that the following testing equipment be available—

(1) A.W.A. Television Sweep Generator, type A56036.

(2) A.W.A. Cathode Ray Oscilloscope (C.R.O.), type A56031.

(3) A.W.A. Television Calibrator, type A56057.

(4) A.W.A. Voltohmyst, type A56010.

(5) A.W.A. Universal Measuring Bridge, type A56048.

AUSTRALIAN TELEVISION CHANNELS

Channel No.	Picture Carrier Freq. Mc/s	Sound Carrier Freq. Mc/s	Receiver R.F. Osc. Freq. Mc/s
1	50.25	55.75	86.25
2	64.25	69.75	100.25
3	86.25	91.75	122.25
4	133.25	138.75	169.25
5	140.25	145.75	176.25
6	175.25	180.75	211.25
7	182.25	187.75	218.25
8	189.25	194.75	225.25
9	196.25	201.75	232.25
10	210.25	215.75	246.25

SOUND I.F. ALIGNMENT

NOTE: When two positions of the core appear to give the correct adjustment, the following apply:—

* coil tuned with core close to chassis.

† coil tuned with core close to can top, i.e., remote from chassis.

Connect the output of the television calibrator to the junction of R216 and L204.

Set the calibrator frequency at 5.5 Mc/s.

Connect the Voltohmyst D.C. probe to pin 1 of V102 (ratio detector) and set the range switch to +15 volts D.C.

Adjust the following transformers for peak output, varying the input to maintain a reading of about +10 volts. T101 (ratio detector transformer) secondary (bottom core)*, T101 primary (top core)†, L101 (sound take off)*, L205 (sound trap)*.

Transfer the Voltohmyst probe to the junction of R105 and C109.

Re-adjust T101 secondary for zero reading on the Voltohmyst.

VIDEO I.F. ALIGNMENT

Connect a source of—3 volts bias to the video I.F. at the junction of R202 and C302.

Connect the Voltohmyst D.C. probe to pin 2 of V204 (video amplifier).

Connect the television calibrator output to TP2 on the tuner through 1,000 pf capacitor using short leads. Set the tuner on Channel 6 with fine tuning control at its mid position and check that the oscillator frequency is 211.25 Mc/s. ± 0.5 Mc/s.

Set the calibrator to the frequencies shown and adjust the following transformers for a peak output, reducing the input to maintain a reading of about —3 volts.

31.85 Mc/s T201*
35.75 Mc/s T202*
33.8 Mc/s T203*

Now, with L202 detuned* and L201 short circuited,
33.8 Mc/s ..... T2†

Then leaving L201 short circuited,
33.8 Mc/s L202*

Remove the short circuit on L201 and with the calibrator set at 37.5 Mc/s adjust L201† for a minimum output, increasing the input to maintain an output of approximately —1 volt. If sufficient output is unobtainable reduce the I.F. bias to zero.

Remove the Voltohmyst and calibrator.

Connect the sweep generator to the aerial input terminals.

Connect a bias source of —2.5 volts to the A.G.C. terminal of the tuner. The I.F. bias remains at —3 volts. Connect the vertical input of the C.R.O. through a shielded cable direct to TP1 on the tuner, earthing the shielding at the tuner.

Set the sweep generator on Channel 6.

Check that the R.F. response viewed on the C.R.O. conforms with that shown in Fig. 11.

Connect the C.R.O. to pin 2 of V204 (video amplifier) using the network shown in Fig. 4.

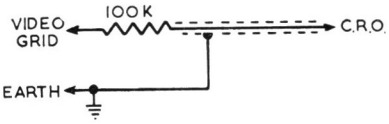

FIG. 4

View the overall response with 3 volts peak to peak output and adjust if necessary the following coils to give the required response of

36 Mc/s. marker at 43 to 47% (adjust T2)

30.5 Mc/s. marker at 4 to 6% (adjust T201)

The tilt is affected by L202.

The desired overall response is shown in Fig. 5.

NOTE: to obtain marker frequencies, the calibrator may be connected to the chassis near V202 making certain that this connection does not upset the viewed response.

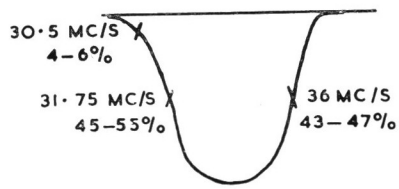

FIG. 5

TUNER ALIGNMENT

A tuner unit which is completely out of alignment, due to most unusual circumstances, should be re-aligned by carrying out the procedure listed below in correct order. In cases where only slight re adjustment is necessary, due to component or valve failure, the tuned circuits associated with them need only be re-adjusted. In such cases, follow the appropriate procedure.

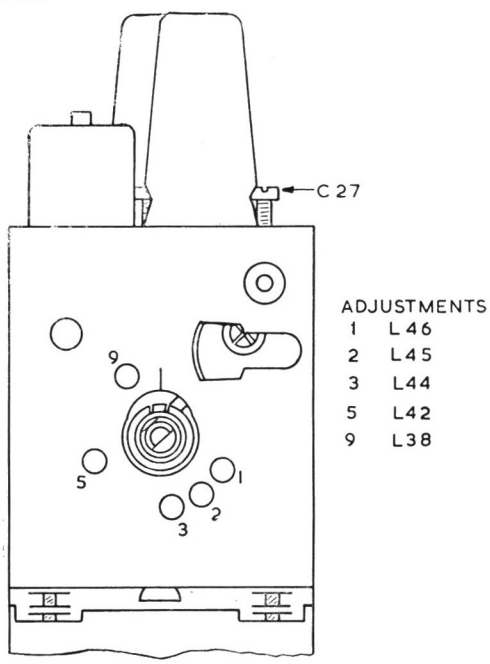

FIG. 6 B OSCILLATOR ADJUSTMENTS

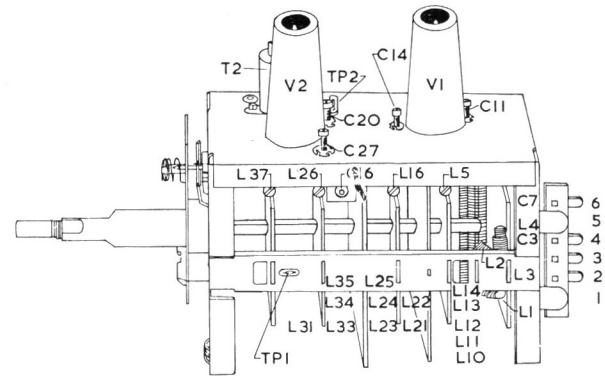

FIG. 6A TUNER ADJUSTMENTS

The tuner is normally aligned in three steps.

(1) Aerial filter panel is separately adjusted as a sub-assembly.

(2) Tuner with its cover removed is adjusted with respect to correct bandpass characteristics and approximately correct oscillator frequencies.

(3) Tuner, with cover in place, is accurately aligned with respect to oscillator frequencies.

Step (1) should not normally be necessary in the field. Components which may cause trouble, i.e., broken windings on T1, may be replaced without re-adjustment. Capacitors C1, C2 and C3 may be replaced without danger of serious malalignment on all channels except channel 1.

For the sake of completeness the factory method of adjustment of the filter panel is included below:

AERIAL FILTER ADJUSTMENT

Connect the A.W.A. Television Calibrator (36 Mc/s. C.W. source) to the 300 ohm aerial terminals on the panel via a 72 ohm to 300 ohm balanced pad (Fig. 7). Disconnect C7 from the junction of L4 and C3; connect this junction via a screened cable to the input of a 36 Mc/s. high gain amplifier.

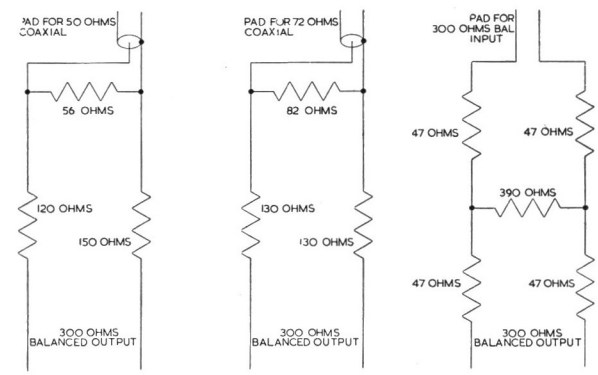

FIG. 7 — SWEEP ATTENUATOR PADS

Adjust L1 and L4 for maximum attenuation of the 36 Mc/s. signal as observed at the output of the amplifier.

Connect the sweep generator to the 300 ohm aerial terminations. To prevent coupling reactance from the sweep

generator into the filter unit, it is advisable to again use a resistance pad. Connect the A.W.A. Television Calibrator loosely to the matching unit terminals. For this purpose it will be found convenient to use the pad shown in Fig. 10.

Disconnect C7 again and connect a crystal detector probe to the junction of L4 and C3. A probe such as that shown in Fig. 8 constructed with very short leads will be most useful.

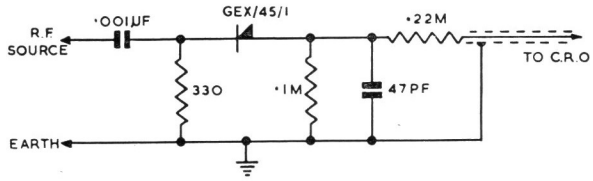

FIG. 8 — CRYSTAL DETECTOR PROBE

Adjust the sweep generator to sweep from 42 to 52 Mc/s. This may be achieved on the A.W.A. Sweep Generator Type A56036 by switching to channel 1 and screwing the core in several turns.

Adjust L2 and L3 to obtain the response shown in Fig. 9. Note that the adjustment of L3 affects the shoulder of the response curve, while L2 affects the position of the 46.5 Mc/s. point.

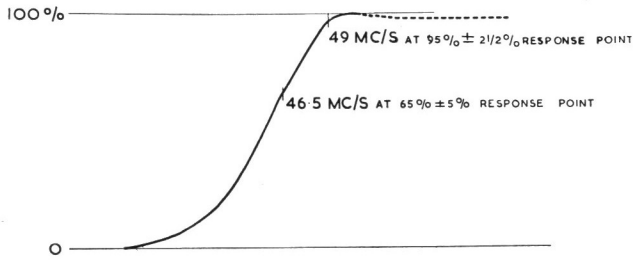

FIG. 9—AERIAL MATCHING UNIT RESPONSE

Remove the crystal probe connections and re-connect C7 to junction of C3 and L4.

COMPLETE R.F. ALIGNMENT

For complete tuner alignment the tuner must be removed from the receiver. Disconnect the co-axial lead from the I.F. input and connect up extension leads for B+, Filament and Earth. Remove the tuner from the chassis and remove its cover.

Connect the sweep generator to the aerial input terminals of the matching unit. It is advisable to have on hand a special cable for connection from tuner to sweep generator with a resistive pad (Fig. 10) having balanced connections going directly to the aerial input terminals.

Connect a bias source to the A.G.C. terminal of the tuner and set the bias to —2.5 volts while making all adjustments for correct responses. Connect the vertical input of the C.R.O. direct to TP1 on the tuner with a shielded lead. Earth the shield at the tuner.

Switch on the receiver or power supply to the tuner and carry out the following adjustments with the correct voltages: 240V H.T., 6.3V Filament and —2.5V Bias.

Loop an insulated wire from the R.F. input terminal of the calibrator around the 6U8 valve with its cover removed.

Switch to channel 10 and adjust L37 to give oscillator frequency of 246.25 Mc/s.

Switch to channel 9 and adjust L38 to give oscillator frequency of 232.25 Mc/s.

Switch to channel 6 and re-adjust C27, if necessary, to 211.25 Mc/s.

Repeat the above procedure until no adjustment is necessary for correct oscillator frequencies on channels 10, 9 and 6 within ± 0.3 Mc/s. Channel 8 and 7 have no separate frequency adjustment, but the frequency will be found to be 225.25 Mc/s and 218.25 Mc/s ± .3 Mc/s respectively, if adjustments of 10, 9 and 6 frequency are carried out correctly.

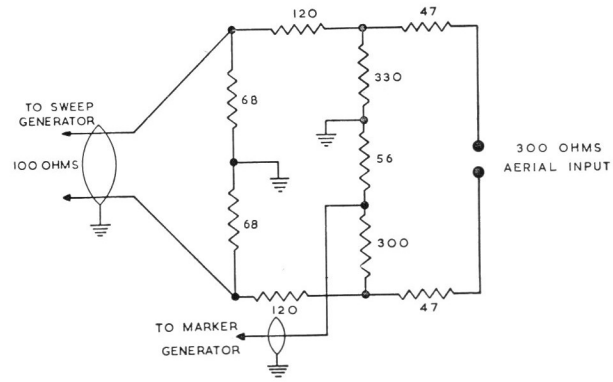

FIG 10 — INPUT PAD

Connect the calibrator to the input pad from the sweep generator as shown in Fig. 10.

Switch the tuner and sweep generator to channel 6 and adjust the output to give a response pattern on the C.R.O. Detune the core of T2 (convertor I.F. transformer) when adjusting response curves until no variation of curve is observed on the C.R.O. Adjust C11, C14, C16 and C20 for correct response shape, with markers, from calibrator at video and sound carrier frequencies, correctly placed on the response curve. Be sure that the pattern shown on the C.R.O. is not disturbed by a 50 c/s pick-up. A direct earth strap between tuner, C.R.O. and power supply will eliminate this interference.

The correct adjustment of C11 is indicated by maximum amplitude at a frequency midway between video and sound markers. C16 is adjusted for the required bandwidth on top of the response curve. C20 affects the frequency of the response mainly and C14 the symmetry. C11 also affects symmetry and tilt but should always be adjusted for the maximum output in the centre.

Switch the tuner and sweep generator to channel 10 and adjust the calibrator to give video and sound markers. Adjust L5 for maximum output between video and sound markers and L26, L16 for correct curve. L16 affects mainly the frequency of the response and L26 the symmetry.

Return to channel 6 and observe the response curve. If re-adjustment is necessary, repeat the procedure contained in the previous three paragraphs, until correct response is obtained on channels 6 and 10 without recourse to adjust-

ment. Observe the responses on channels 9, 8 and 7 which should be within the tolerances shown in Fig. 11.

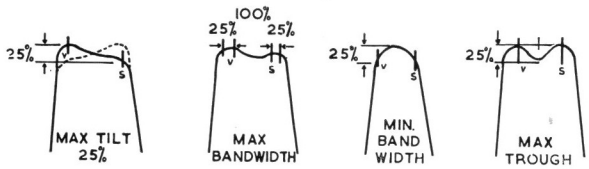

FIG. 11 — RESPONSE CURVE TOLERANCES ALL CHANNELS

Re-check the oscillator frequency adjustment as in the first paragraph of this section. If re-adjustment is necessary, check the response curves of channels 10 and 6. Re-adjust if necessary.

Then proceed as follows:

Switch to channel 5 and adjust screw in L42 to give oscillator frequency of 176.25 Mc/s.

Switch to channel 3 and adjust screw in L44 to give oscillator frequency of 122.25 Mc/s.

Switch to channel 2 and adjust screw in L45 to give oscillator frequency of 100.25 Mc/s.

Switch to channel 1 and adjust screw in L46 to give oscillator frequency of 86.25 Mc/s.

Switch tuner and sweep generator to channel 5 and spread or close turns of L21 and L31 to give correct curve. Adjust L10, in the R.F. amplifier grid circuit, for maximum response in the centre of the channel. L21 affects the frequency of the response mainly and L31 the symmetry.

Switch to channel 4 and if necessary adjust L22 and L11 for correct response.

Switch to channel 3 and spread or close the turns of L23 and L33 to give approximately the correct response. Spread or close the turns of L12, in grid circuit, for maximum response at the centre frequency which corresponds to the minimum hollow in the top of the curve.

Switch to channels 2 and 1 in turn and adjust—

L24, L34, L13 on channel 2
L25, L35, L12 on channel 1
for correct response curve.

Re-check response curves of channels 10 and 6, and re-adjust C14, C20, L16, L26 if necessary. Then re-check response curves of channels 5, 4, 3, 2 and 1.

FINAL OSCILLATOR ADJUSTMENT

This adjustment may be carried out with the tuner mounted in its normal manner on the chassis.

Replace the cover on the tuner unit and with the calibrator R.F. input lead looped around the 6U8 valve, re-adjust C27 on channel 6, L37 on channel 10, L38 on channel 9 for the correct frequency when the fine tuning control is in its central position. Then re-adjust screws through the front of the tuner for correct frequencies on channels 5, 3, 2 and 1.

Check that the correct frequency on all channels is obtained without adjustments when the fine tuning control is rotated ± 45° from its centre position. Check that the oscillator injection voltage, measured with the Voltohmyst D.C. probe at TP1, is between 2.0 and 5.0 volts.

Make sure that the screws retaining the covers are firmly in position and that the covers are well fitted to maintain a low oscillator radiation.

SPECIAL NOTES

1. Always align with the correct bias of —2.5 volts, which is an average figure of the A.G.C. potential.

2. The cover of the tuner must be in position when making final adjustment to frequency of local oscillator.

3. Detune the core of T2 (converter I.F. transformer) when adjusting response curves until no variation of the curve is observed on the C.R.O.

HORIZONTAL OSCILLATOR ALIGNMENT

Normally the adjustment of the horizontal oscillator is not considered to be a part of the alignment procedure, but since the oscillator waveform adjustment may require the use of an oscilloscope, it usually can not be done conveniently in the field. The waveform adjustment is made at the factory and normally should not require re-adjustment in the field. However, the waveform adjustment should be checked whenever the receiver is aligned or whenever the horizontal oscillator operation is incorrect.

When no C.R.O. is available the horizontal oscillator may be aligned and checked as follows:

Tune in a station, if available, or, using a generator to provide the appropriate synchronising signals, synchronise the picture by adjusting the horizontal and vertical hold controls respectively. If the picture cannot be synchronised, short circuit the sine wave stabilising coil (L401) and then adjust the horizontal hold control until synchronisation is obtained. Remove the short circuit and adjust the core in L401 until the picture is again synchronised. If synchronisation is still unobtainable, adjust the horizontal hold control slowly, in conjunction with the core in L401, until the picture is synchronised.

Check for over-drive and make any necessary re-adjustments to the horizontal hold control or to the core in the sine wave stabilising coil.

To check if the correct adjustment has been made, turn the horizontal hold control to the extreme clockwise position. The picture should be out of synchronisation, with a minimum of twelve bars slanting downwards to the left. Turn the control slowly anti-clockwise. The number of diagonal black bars will be gradually reduced and when only 1½ to 3 bars sloping downward to the left are obtained, the picture will synchronise upon slight additional anti-clockwise rotation of the control. The picture should remain in synchronisation for approximately two full turns of additional anti-clockwise rotation of the control. Continue turning the control anti-clockwise until the picture falls out of synchronisation. Rota-

tion beyond the "fall-out" position should produce between 2 and 5 bars before motorboating occurs. Motorboating should be reached before the control reaches the extreme anti-clockwise position.

If an oscilloscope is available, the procedure is as follows:

Connect the low capacity probe of the C.R.O. to the terminal of L401 which is connected to C406 and R408. Dress the probe at least one inch away from the sine wave coil (L401). Turn the horizontal hold control so that the picture is in synchronisation. The pattern on the C.R.O. should be as shown in Fig. 12A. If not, adjust the sine wave coil until nominal waveform, as shown, is obtained. Remove the C.R.O. on completion of this adjustment.

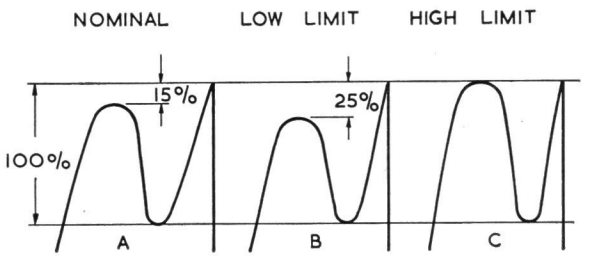

FIG. 12 — HORIZONTAL OSCILLATOR WAVE FORMS

When the receiver passes the above checks and the picture is normal and stable, the horizontal oscillator is properly aligned.

SENSITIVITY CHECK

A comparative sensitivity check can be made by operating the receiver on a weak signal from a television station and comparing the picture and sound obtained to that obtained on other receivers under the same conditions.

This weak signal can be obtained by connecting the service department aerial to the receiver through a ladder type attenuator pad. The number of stages in the pad depends upon the signal strength available at the aerial. A sufficient number of stages should be inserted so that a somewhat less than normal contrast picture is obtained when the contrast control is in the extreme clockwise position. Only carbon type resistors should be used to construct the pad.

A.G.C. CONTROL

The A.G.C. control (R304) is adjusted at the factory for average receiver conditions; however, it is advisable to adjust it for individual conditions.

It should be noted that the A.G.C. control should not be set any further clockwise than is necessary to remove "snow." In cases of high signal level, where "snow" is not visible at any setting of the control, the latter should be left in its full anti-clockwise position.

RESPONSE CURVES

The response curves referred to throughout the alignment procedure were taken from a production set, but some variations can be expected.

CRITICAL LEAD-DRESS

1. All leads in the video I.F., sound I.F. and video circuits to be as short as possible.

2. Any non-insulated carbon resistors to be dressed so as to avoid possible contact with the chassis or other components.

3. The following components in the video amplifier stage to be kept clear of the chassis and other metal parts in order to avoid excessive stray capacitances: C221, C222, C225, L205, L206, L207, R219, R225.

4. High voltage capacitors C415, C416 and C417 to be dressed so as to avoid possible breakdown to chassis or other components.

5. High voltage leads to the plate of V402 and the side connection of the kinescope to be dressed as far from adjacent metal parts as possible.

6. All high voltage (16KV) wiring and connections to be kept free of sharp spikes and discontinuities likely to cause corona.

7. Any high wattage resistors (wire wound) to be dressed clear of other components which may be damaged because of fairly high body temperature.

8. Dress power leads away from the volume control and 6BV7 input circuit.

9. When the chassis is mounted in the cabinet, keep the lead to the cathode of the kinescope dressed clear of the metal parts of the chassis and the high voltage yoke leads.

D.C. RESISTANCE OF WINDINGS

WINDING		D.C. RESISTANCE IN OHMS
Tuner Windings		*
L101	Sound Take Off Coil	1.3
L201	37.5 Mc/s Trap	*
L202	I.F. Input Coil	*
L203	Video Detector Filter Choke	3
L204	Video Detector Peaking Coil	7.5
L205	5.5 Mc/s Trap	1.7
L206	Video Amplifier Shunt Peaking Coil	12
L207	Video Amplifier Series Peaking Coil	6
L401	Horizontal Sine Wave Coil	45
L402	H.F. Choke	*
L403	Horizontal Linearity Coil	19
L404	Width Coil	
	Red—T402	12
	Red—R417	3.3
L405	Deflection Yoke	22
L406	Deflection Yoke	22
L407	Deflection Yoke	15
L408	Deflection Yoke	15
L409	Filter Choke	40
T101	Ratio Detector Transformer	
	Primary	8
	Secondary	*
T102	Audio Output Transformer	
	Primary	380
	Secondary	*
T201	1st Video I.F. Transformer	
	Primary	*
	Secondary	*
T202	2nd Video I.F. Transformer	
	Primary	*
	Secondary	*
T203	3rd Video I.F. Transformer	
	Primary	*
	Secondary	*
T301	Vertical Oscillator Transformer	
	Primary (Grid)	450
	Secondary (Cathode)	130
T302	Vertical Output Transformer	
	Primary	550
	Secondary	14
T401	Horizontal Blocking Oscillator Transformer	
	YE—Anode	23
	YE—C405	60
T402	Horizontal Output Transformer	
	1—2	4
	2—3	20
	3—4	9.5
	4—5	12
	5—Anode	300
T403	Power Transformer	
	Primary	7
	Secondary	45

* Less than 1 ohm.

The above readings were taken on a standard chassis, but substitution of materials during manufacture may cause variations, and it should not be assumed that a component is faulty if a slightly different reading is obtained.

MECHANICAL REPLACEMENT PARTS

Description	Part No.	Code No.
MAIN CHASSIS:		
Anode Cap, H. V. Rectifier		188011
Anode Cap and Lead, Horizontal Output	40044	
Base, Tuner Mounting	40918	
Bracket, Chassis Rear Mounting	40201	
Bracket, Chassis Side Mounting	40214	
Bracket, Width and Linearity Coils	40213	
Cap Assembly, Yoke	40788	
Clamp Assembly, Yoke Cap	40789	
Clamp, Power Lead	1221	
Clamp, Yoke	40767	
Coupling, Contrast Control	40206	
Cover, Power Transformer	40025	
Dial Lamp Holder	32804	
Fuse Holder (B+)	40209	
Fuse Holder (Mains)	40845	
Insulator, Contrast Control Mounting	40725	
Insulator, H.V. Rectifier Socket Mounting	40030	
Lead, Ultor	49709	
Magnet, Ion Trap	40247	
Plate, On/Off—Tone, Volume	40200	
Plate, Preset Control Mounting	40950	
Plug, Speaker 4 Pin (Teletron PS14)		581404
Plug, Speaker 2 Pin		581215
Screen, Sound I.F.	40907	
Shield, H.V. Rectifier	40034	
Shield, Horizontal Output Transformer	40036	
Shield Cover, Horizontal Output Transformer	40037	
Shield, Light	41028	
Shield, 9 Pin Volve		653014
Shield, 7 Pin Valve		653013
Socket, 8 Pin Mica Filled		794582
Socket, 8 Pin Wafer		793033
Socket, 4 Pin Speaker		793287
Socket, Kinescope		794598
Socket, 9 Pin with Register		793058
Socket, 7 Pin less Mount Flange		794568
Socket, 7 Pin with Register, Mica Filled		794569
Spindle, Contrast Control Extension	40924	
Spring, Earthing Deflection Yoke	40564	
Spring, Contact, Chassis to Base Shield	40509	
Terminal Panel, Aerial	40897	

Description	Part No.	Code No.
TUNER UNIT:		
Tuner	41024	
Bracket, Support	40951	
Cover, Front	40153	
Cover, Main Body	40152	
Pin Jack Assembly	27685	
Terminal Panel Assembly	40612	
FINE TUNING ASSEMBLY:		
Detent Mech. Assembly	40961	
Guide, Fine Tuning Spring	40140	
Lever Assembly	40141	
Retainer Spring, Fine Tuning	40502	
Spring, Lever	40500	
Spring, Wiper	40507	
MISCELLANEOUS:		
Cabinet 207-C	28150	
Cabinet 209-C	28148	
Cabinet 211-T	28157	
Cabinet 212-C	28149	
Clamp, Baffle (207-C only)	40912	
Clamp, Baffle (211-T only)	40728	
Cover, Kinescope Base (212-C)	40732	
Cradle Strap Assembly L.H. 21"	40955	
Cradle Strap Assembly R.H. 21"	40956	
Cradle Strap Assembly 17"	40925	
Dust Seal 21" Kinescope	40731	
Dust Seal 17' Kinescope	40258	
Escutcheon	40966	
Knob As'mbly, Brightness, Contrast, Vert. Hold	40936	
Knob Assembly, Channel Selector	40943C	
Knob Assembly, Fine Tuning	40857	
Knob Assembly, On/Off Tone	40944C	
Knob Assembly, Volume	40859	
Leg, Cabinet (207-C, 211-T)	40870	
Leg, Cabinet (209-C)	41025	
Mask 211-T	41229	
Mask 212-C	40713	
Mask 207-C	41105	
Mask 209-C	40968	
Plate, Speaker Mounting (209-C, 212-C)	40942	
Safety Glass 21"	40701	
Safety Glass 17"	40843	
Strap, Earthing Kinescope Mt. to Chassis 21"	40234	
Strap, Earthing Kinescope Mt. to Chassis 17"	40938	

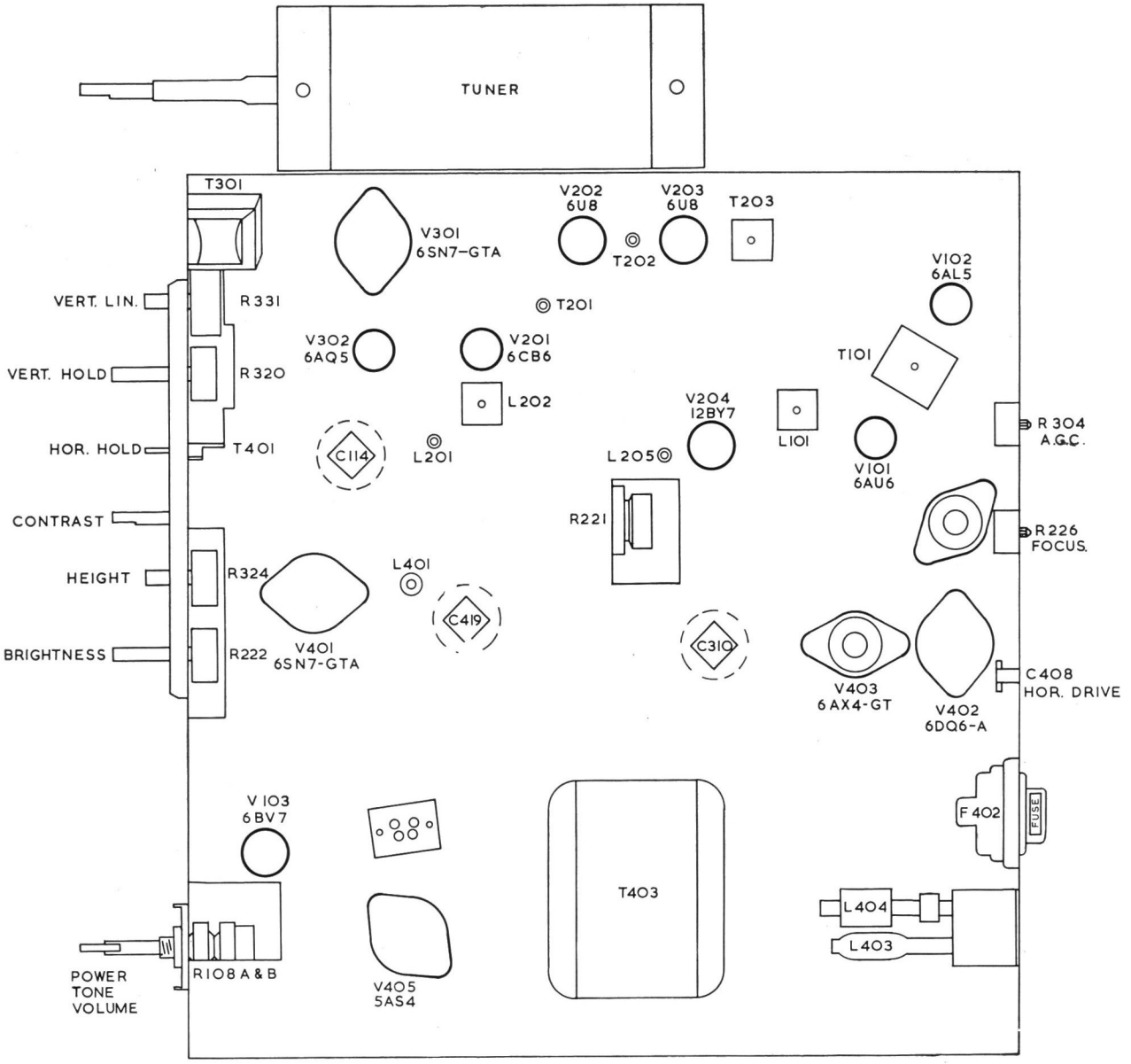

UNDER CHASSIS ALIGNMENT ADJUSTMENT

FIG. 13

SOCKET VOLTAGES

Signal input as indicated. A.G.C. normal setting. All D.C. voltages measured with a Voltohmyst.

* Do not measure. † Measured with Voltohmyst fitted with high voltage probe.

NOTE: These voltages were measured on a typical chassis, but some variations should be expected on individual chassis.

Valve No.	Type	Function	Operating Condition	Anode to Chassis		Screen to Chassis		Cathode to Chassis		Grid to Chassis		Remarks
				Pin No.	Volts	Pin No.	Volts	Pin No.	Volts	Pin No.	Volts	
V1	6BQ7A	R.F. Amp.	30 mV	6	236	—	—	8	133	7	127	
			No Signal	6	220	—	—	8	105	7	103	
V1	6BQ7A	R.F. Amp.	30 mV	1	133	—	—	3	.14	2	3.1	
			No Signal	1	105	—	—	3	1.25	2	.6	
V2	6U8	Converter	30 mV	6	66	3	66	7	0	2	—2 to —5	
			No Signal	6	62	3	62	7	0	2	—2 to —5	
V2	6U8	R.F. Oscillator	30 mV	1	205	—	—	8	66	9	60	
			No Signal	1	200	—	—	8	62	9	54	
V101	6AU6	1st Sound I.F.	30 mV	5	235	6	140	7	.95	1	0	
			No Signal	5	228	6	155	7	1.06	1	0	
V102	6AL5	Ratio Detector	30 mV	2 7	—16 0.6	— —	— —	5 1	1.8 15	— —	— —	
			No Signal	2 7	—.29 0	— —	— —	5 1	0 .26	— —	— —	
V103	6BV7	Audio Output	30 mV	2	225	3	245	7	4.9	8	0	
			No Signal	2	220	3	240	7	4.7	8	0	
V201	6CB6	1st Video I.F.	30 mV	5	104	6	104	2	.06	1	—2.6	
			No Signal	5	79	6	79	2	.42	1	—.06	
V202A	6U8	2nd Video I.F.	30 mV	6	242	3	235	7	105	2	99	
			No Signal	6	225	3	200	7	87	2	85	
V202B	6U8	Sync. Sep.	30 mV	1	42	—	—	8	0	9	—24	
			No Signal	1	17.6	—	—	8	0	9	—1	
V203A	6U8	3rd Video I.F.	30 mV	6	205	3	117	7	1.18	2	0	
			No Signal	6	200	3	108	7	1.05	2	0	
V203B	6U8	Video Det. & A.G.C.	30 mV	1	—5.5	—	—	8	0	9	—2.1	
			No Signal	1	—.9	—	—	8	0	9	—.47	
V204	12BY7	Video Amp.	30 mV	7	146	8	155	1	.57	2	—2.1	
			No Signal	7	114	8	148	1	.84	2	—.47	
V205	17AVP4A or 21ALP4A	Kinescope*	No Signal	Side Contact	15.8KV†	10	358	11	41 } ‡ 142 }	2	0	‡ Varies with Brightness
V301A	6SN7GTA	Sync. Amp.	30 mV	5	68	—	—	6	0	4	—2.75	
			No Signal	5	60	—	—	6	0	4	.21	
V301B	6SN7GTA	Vert. Osc.	No Signal	2	185	—	—	3	0	1	46	With height & linearity controls adjusted for correct raster
V302	6AQ5	Vert. Output	No Signal	5	210	6	220	2	17.7	1	0	
V401	6SN7GTA	Hor. Control	No Signal	2	243	—	—	3	—2 to —8	1	—22.4	
		Hor. Osc.	No Signal	5	170	—	—	6	0	4	—83	
V402	6DQ6A	Hor. Output	No Signal	Top Cap	5.1KV Peak*	4	155	8	10.9	5	—20	
V403	6AX4GT	Damper	No Signal	5	240	—	—	3	4KV Peak*	—	—	
V404	1B3GT	H.V. Rect.	No Signal	Top Cap	15.8KV Peak*	—	—	2,7	15.8KV†	—	—	
V405	5AS4	Rectifier	No Signal	4,6	256A.C.	—	—	2,8	4.9	—	—	

***NOTE:** Pin 6 = 550V Focus Control maximum clockwise.

Junction C413 and C414, 620V D.C.—Across C419 255V D.C.—Across C310C 243V D.C.—Across C310D 238V D.C.—Across C114C 150V D.C.

CIRCUIT A.W.A. TELEVISION RECEIVER MODELS 207-C, 209-C, 211-T & 212-C

In some chassis R339, R424 and R425 were omitted.
In some chassis the value of R209 was 12K ohms.
In some chassis the value of R325 was 680K ohms.
In some chassis the value of C317 was 0.0047 μf.
In some chassis C216 was an 0.001 μf Hi-K disc.

Some changes were incorporated to reduce "ringing" effect, the old circuit prior to this change being:—

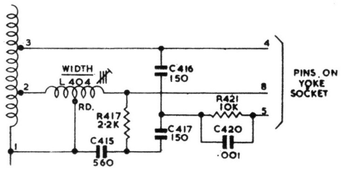

R417 was 2.2K ohms ± 10% ½ watt.
R421 was 10K ohms ± 10% ½ watt.
C415 was 560 pF ± 10% 1000V Working Disc.
C416 was 150 pF ± 10% 2500V Working Disc.
C420 was 0.001 μf ± 10% 1600V Working Paper.
L404 was Part No. 40770.
T402 was Part No. 40773.

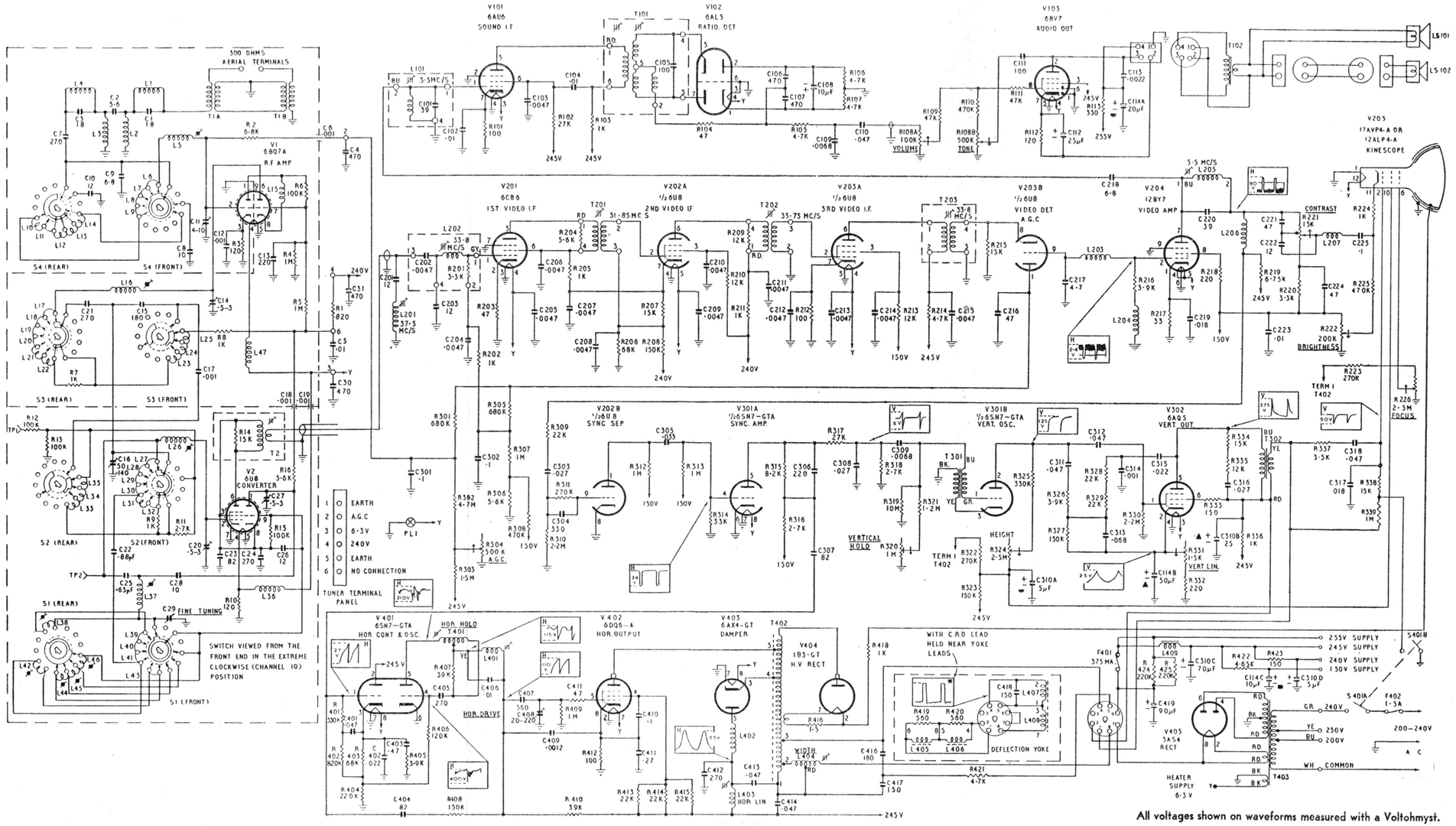

All voltages shown on waveforms measured with a Voltohmyst.

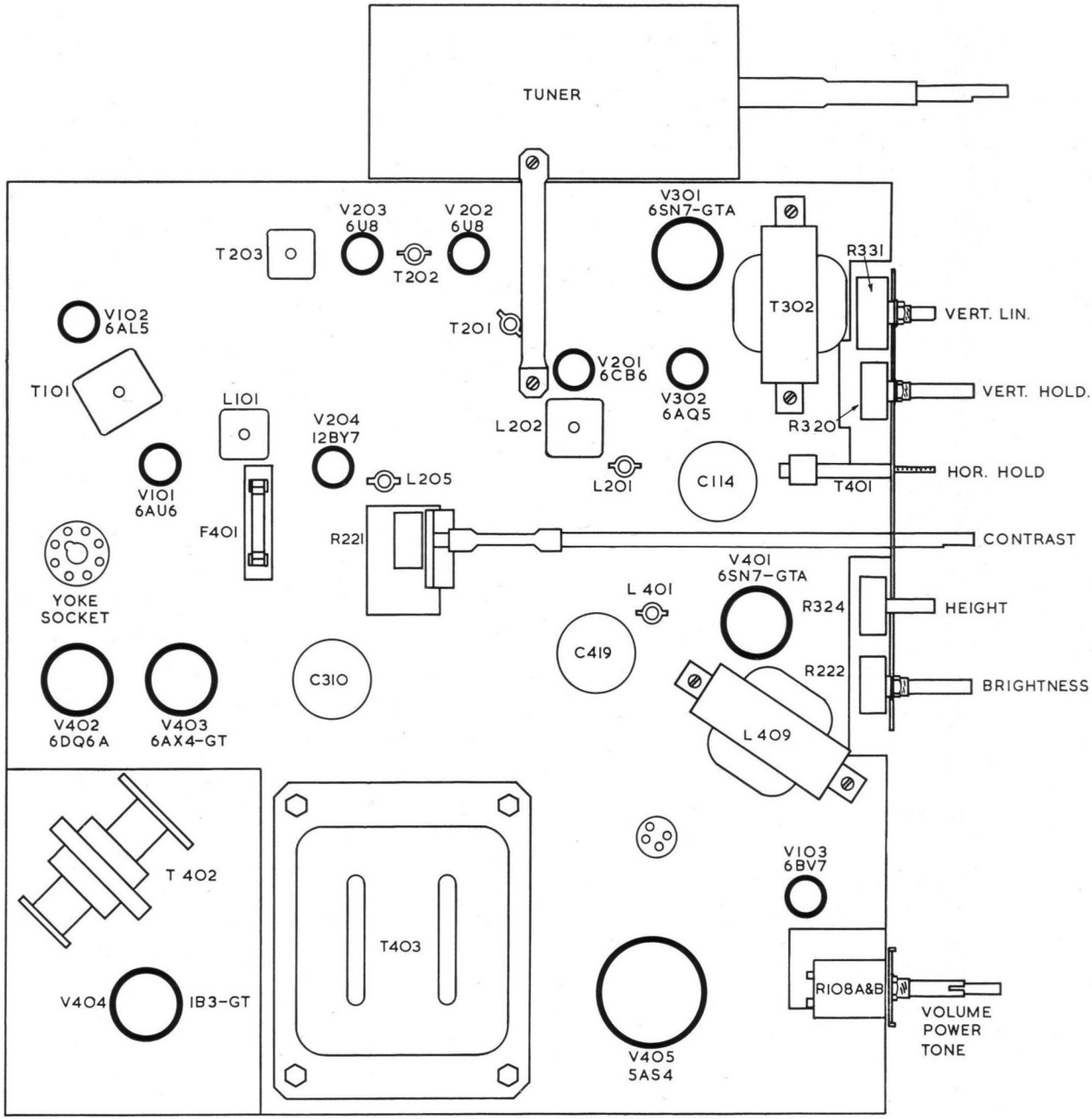

TOP CHASSIS ALIGNMENT ADJUSTMENT

FIG. 15

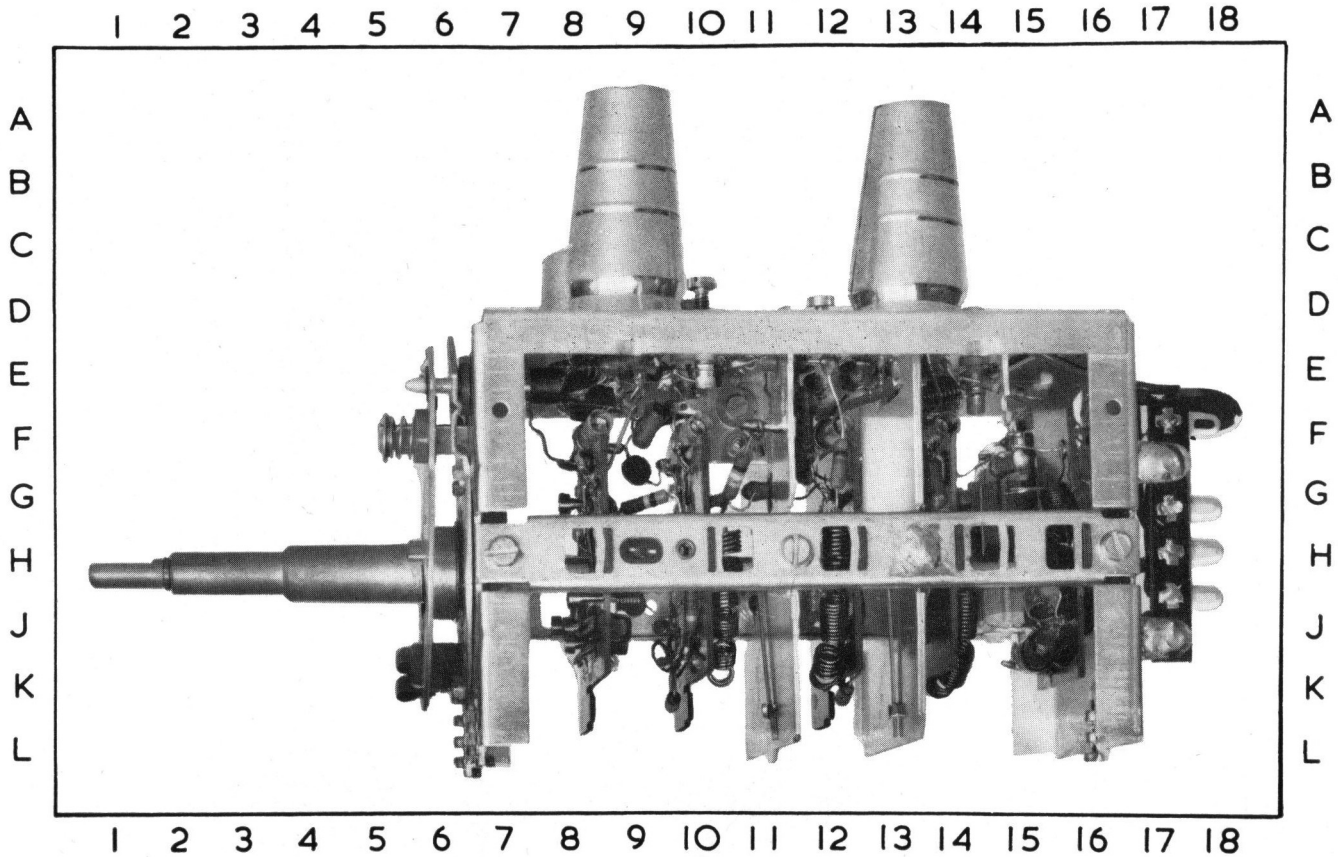

TUNER LAYOUT

FIG. 16

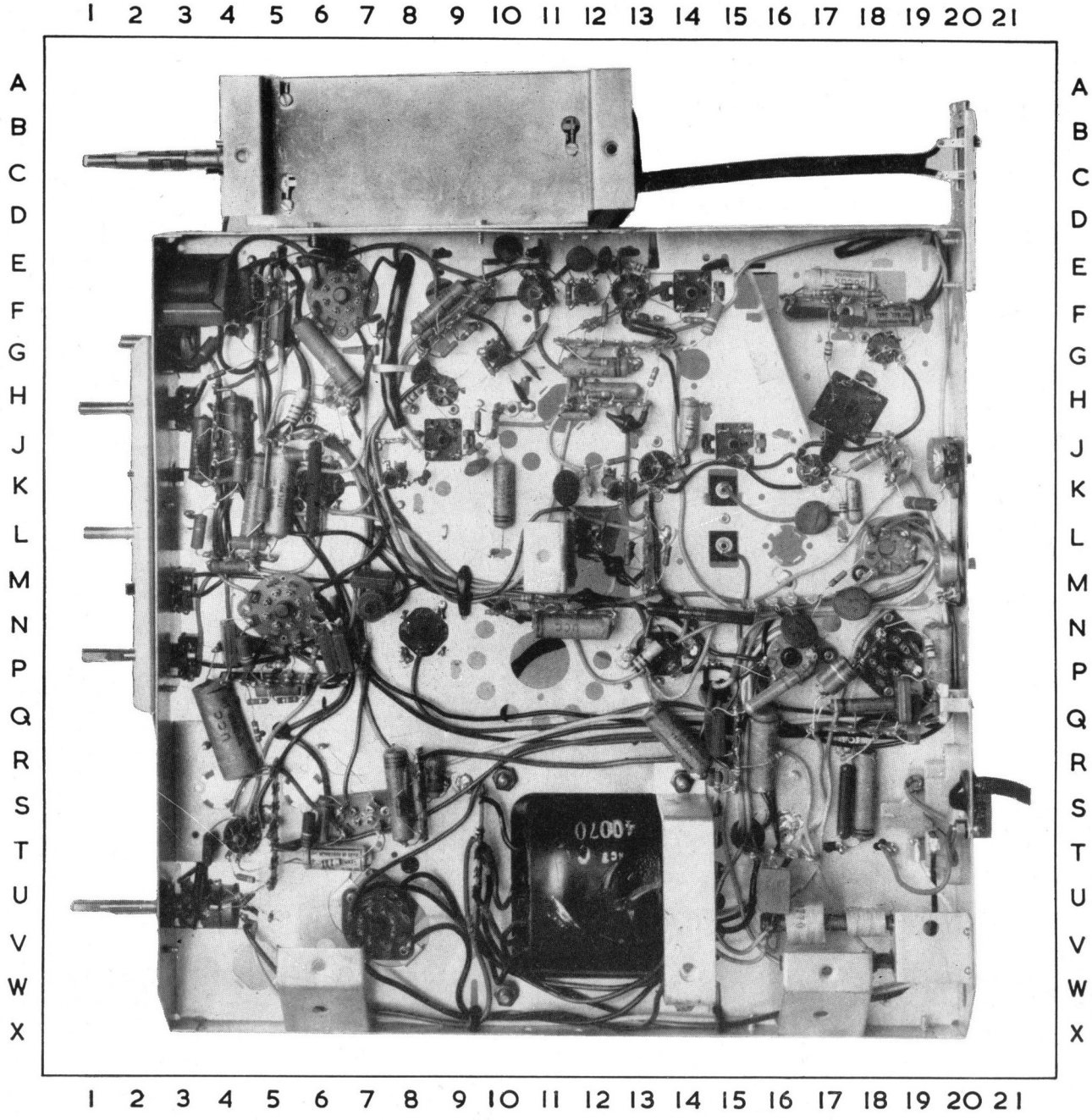

BOTTOM LAYOUT

FIG. 17

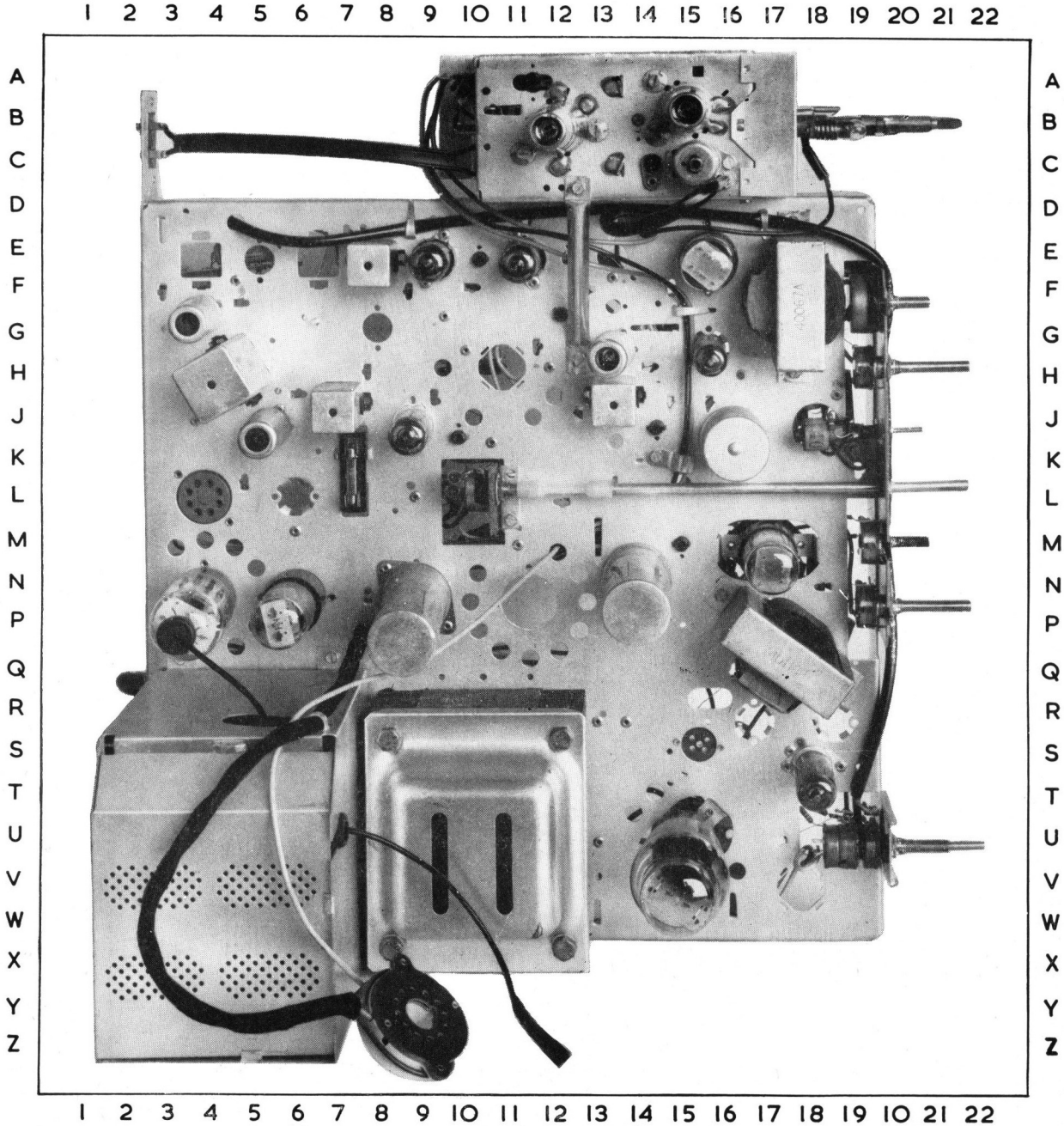

TOP LAYOUT

FIG. 18

CIRCUIT CODE MODELS 207-C, 209-C, 211-T AND 212-C

CODE No.	DESCRIPTION	PART No.	FIG. No.	LOCATION
	INDUCTORS			
L1	Composite Filter Coils	41015	16	J15
L2		41016	16	J15
L3		41017	16	H15
L4		41018	16	G15
L5	Aerial Section Inductor	40300	16	F14
L6	Aerial Section Segment	40169	16	G13
L7			16	H13
L8			16	H13
L9			16	J13
L10	Channel 5 Aerial Section Inductor	40304	16	J14
L11	Channel 4 Aerial Section Inductor	40305	16	J14
L12	Channel 3 Aerial Section Inductor	40314	16	K14
L13	Channel 2 Aerial Section Inductor	40315	16	K14
L14	Channel 1 Aerial Section Inductor	40316	16	J14
L15	Interstage Coupling 6BQ7A	40108	16	E14
L16	6BQ7A Plate Section Inductor	40312	16	F12
L17	S3 Rear		16	G12
L18			16	H12
L19	6BQ7A Plate Section Inductor	40169	16	J12
L20			16	J12
L21	Channel 5 6BQ7A Plate Sect. Inductor	40302	16	J13
L22	Channel 4 6BQ7A Plate Sect. Inductor	40303	16	K13
L23	Channel 3 6BQ7A Plate Sect. Inductor	40317	16	K12
L24	Channel 2 6BQ7A Plate Sect. Inductor	40318	16	J12
L25	Channel 1 6BQ7A Plate Sect. Inductor	40319	16	H12
L26	Converter Grid Section Inductor	40311	16	F10
L27	S2 Front		16	G10
L28			16	G10
L29	Converter Grid Section Segment	40168	16	H10
L30			16	J10
L31	Channel 5 Converter Grid Sect. Inductor	40301	16	K9
L32	Channel 4 Converter Grid Sect. Inductor	40170	16	K10
L33	Channel 3 Converter Grid Sect. Inductor	40320	16	K10
L34	Channel 2 Converter Grid Sect. Inductor	40321	16	J10
L35	Channel 1 Converter Grid Sect. Inductor	40322	16	H10
L36	Oscillator Filament Choke	40107	16	F9
L37	Oscillator Section Inductor	40313	16	F8
L38	Channel 9 Oscillator Section Inductor	40310	16	G8
L39	Oscillator Section Segment	40167	16	G8
L40			16	H8
L41			16	J8
L42	Channel 5 Oscillator Section Inductor	40306	16	J9
L43	Channel 4 Oscillator Section Inductor	40182	16	J8
L44	Channel 3 Oscillator Section Inductor	40307	16	J9
L45	Channel 2 Oscillator Section Inductor	40308	16	J9

CODE No.	DESCRIPTION	PART No.	FIG. No.	LOCATION
	INDUCTORS (continued)			
L46	Channel 1 Oscillator Section Inductor	40309	16	J9
L47	6BQ7A Filament Choke	40106	16	E13
L101	Sound Take Off Coil	40903	17	J15
L201	37.5 Mc/s Trap	40906	17	K8
L202	Video I.F. Input Coil	40900	17	J9
L203	Detector Filter Choke	40323	17	F13
L204	Detector Load Peaking Coil	40117	17	H12
L205	5.5 Mc/s Trap	40905	17	K12
L206	Video Amplifier Shunt Peaking Coil	40118	17	M13
L207	Video Amplifier Series Peaking Coil	40119	17	M12
L401	Horizontal Sine Wave Coil	40050	17	M7
L402	H.F. Choke	602019 or 214516	17	P16
L403	Horizontal Linearity Coil	40048	17	W17
L404	Horizontal Width Coil	40049	17	V17
L405	Deflection Yoke			
L406				
L407				
L408				
L409	H.T. Filter Choke	40113B	18	Q17

	RESISTORS					
R1	820 ohms	± 10%	½ watt		16	F17
R2	6.8K ohms	± 10%	½ watt		16	E15
R3	120 ohms	± 10%	½ watt		16	E13
R4	1 Megohm	± 10%	½ watt		16	E13
R5	1 Megohm	± 10%	½ watt		16	E12
R6	100K ohms	± 10%	½ watt		16	E14
R7	1K ohms	± 10%	½ watt		16	K12
R8	1K ohms	± 10%	½ watt		16	F12
R9	1K ohms	± 10%	½ watt		16	K10
R10	120 ohms	± 10%	½ watt		16	E8
R11	2.7K ohms	± 10%	½ watt		16	J10
R12	100K ohms	± 10%	½ watt		16	G9
R13	100K ohms	± 10%	½ watt		16	G11
R14	15K ohms	± 5%	½ watt		16	E8
R15	100K ohms	± 10%	½ watt		16	E8
R16	5.6K ohms	± 10%	½ watt		16	E10
R101	100 ohms	± 10%	½ watt		17	K17
R102	27K ohms	± 10%	1 watt		17	J18
R103	1K ohm	± 10%	½ watt		17	J18
R104	47 ohms	± 10%	½ watt		17	G17
R105	4.7K ohms	± 10%	½ watt		17	E18

CIRCUIT CODE MODELS 207-C, 209-C, 211-T AND 212-C

CODE No.	DESCRIPTION	PART No.	FIG. No.	LOCATION
	RESISTORS (continued)			
R106	4.7K ohms ± 5% ½ watt		17	F18
R107	4.7K ohms ± 5% ½ watt		17	E17
R108A	100K ohms Volume Control	40967	17	U3
R108B	500K ohms Tone Control	40967	17	U4
R109	47K ohms ± 10% ½ watt		17	U4
R110	470K ohms ± 10% ½ watt		17	U4
R111	47K ohms ± 10% ½ watt		17	U4
R112	120 ohms ± 10% ½ watt		17	T6
R113	330 ohms ± 10% 1 watt		17	S6
R201	3.3K ohms ± 5% ½ watt (in L202)		17	J9
R202	1K ohm ± 10% ½ watt		17	J9
R203	47 ohms ± 10% ½ watt		17	H8
R204	5.6K ohms ± 5% ½ watt		17	G10
R205	1K ohm ± 10% ½ watt		17	G11
R206	68K ohms ± 10% ½ watt		17	F9
R207	15K ohms ± 10% ½ watt		17	G11
R208	150K ohms ± 10% ½ watt		17	F10
R209	12K ohms ± 5% ½ watt		17	F11
R210	12K ohms ± 10% ½ watt		17	E10
R211	1K ohm ± 10% ½ watt		17	E11
R212	100 ohms ± 10% ½ watt		17	E13
R213	12K ohms ± 10% ½ watt		17	F12
R214	4.7K ohms ± 10% 1 watt		17	F15
R215	15K ohms ± 10% ½ watt		17	F14
R216	3.9K ohms ± 5% ½ watt		17	H13
R217	33 ohms ± 10% ½ watt		17	J14
R218	220 ohms ± 10% ½ watt		17	J12
R219	6.75K ohms ± 10% 10 watt (W.W.)		17	N14
R220	3.3K ohms ± 10% ½ watt		17	L13
R221	15K ohms Contrast Control	40354	18	L10
R222	200K ohms Brightness Control	40920	17	P3
R223	270K ohms ± 10% ½ watt		17	R15
R224	1K ohm ± 10% ½ watt		17	M10
R225	470K ohms ± 10% ½ watt		17	M10
R226	2.5 Megohms Focus Control	620781	17	M20
R301	680K ohms ± 10% ½ watt		17	F12
R302	4.7 Megohms ± 10% ½ watt		17	G12
R303	1.5 Megohms ± 10% 1 watt		17	K19
R304	500K ohms A.G.C.	40351/2	17	J20
R305	680K ohms ± 10% ½ watt		17	F12
R306	5.6K ohms ± 10% ½ watt		17	H11
R307	1 Megohm ± 10% ½ watt		17	J11
R308	470K ohms ± 10% ½ watt		17	J12
R309	22K ohms ± 10% ½ watt		17	L14
R310	2.2 Megohms ± 10% ½ watt		17	H12

CODE No.	DESCRIPTION	PART No.	FIG. No.	LOCATION
	RESISTORS (continued)			
R311	270K ohms ± 10% ½ watt		17	H11
R312	1 Megohm ± 10% ½ watt		17	F9
R313	1 Megohm ± 10% ½ watt		17	G8
R314	33K ohms ± 10% ½ watt		17	G9
R315	8.2K ohms ± 10% 1 watt		17	E6
R316	2.7K ohms ± 5% ½ watt		17	F5
R317	27K ohms ± 10% 1 watt		17	E6
R318	2.7K ohms ± 10% ½ watt		17	E4
R319	10 Megohms ± 10% ½ watt		17	F4
R320	1 Megohm Vertical Hold Control	40921	17	H3
R321	1.2 Megohms ± 10% ½ watt		17	G4
R322	270K ohms ± 10% ½ watt		17	R15
R323	150K ohms ± 10% ½ watt		17	R16
R324	2.5 Megohms Height Control	40922	17	M3
R325	330K ohms ± 10% ½ watt		17	H4
R326	3.9K ohms ± 10% ½ watt		17	J4
R327	150K ohms ± 10% ½ watt		17	J3
R328	22K ohms ± 5% 1 watt		17	L3
R329	22K ohms ± 5% 1 watt		17	J4
R330	2.2 Megohms ± 10% ½ watt		17	G7
R331	1.5K ohms Vertical Linearity Control	40923	17	G3
R332	220 ohms ± 10% 1 watt		17	G3
R333	150 ohms ± 10% 1 watt		17	H5
R334	15K ohms ± 10% 1 watt		17	K5
R335	12K ohms ± 10% 1 watt		17	L4
R336	1K ohm ± 10% 1 watt		17	J5
R337	3.3K ohms ± 10% ½ watt		17	S8
R338	15K ohms ± 10% ½ watt		17	R8
R339	1 Megohm ± 20% ½ watt		17	R9
R401	330K ohms ± 10% ½ watt		17	P6
R402	820K ohms ± 10% ½ watt		17	Q5
R403	68K ohms ± 10% ½ watt		17	Q5
R404	220K ohms ± 10% ½ watt		17	P5
R405	3.9K ohms ± 10% ½ watt		17	Q5
R406	120K ohms ± 10% 1 watt		17	P4
R407	39K ohms ± 10% ½ watt		18	J18
R408	150K ohms ± 10% ½ watt		17	P7
R409	1 Megohm ± 10% ½ watt		17	Q19
R410	39K ohms ± 10% 1 watt		17	Q18
R411	47 ohms ± 10% ½ watt		17	P19
R412	100 ohms ± 10% 5 watt		17	S17
R413	22K ohms ± 10% 1 watt		17	P17
R414	22K ohms ± 10% 1 watt		17	P17
R415	22K ohms ± 10% 1 watt		17	P17
R416	1.5 ohms ± 20% ½ watt (High Volt Box)			
R417	Not used			

CIRCUIT CODE MODELS 207-C, 209-C, 211-T AND 212-C

CODE No.	DESCRIPTION	PART No.	FIG. No.	LOCATION
	RESISTORS (continued)			
R418	1K ohm ± 10% ½ watt (High Volt Box)			
R419	560 ohms ± 10% ½ watt (In Yoke)			
R420	560 ohms ± 10% ½ watt (In Yoke)			
R421	4.7K ohms ± 10% ½ watt		17	M17
R422	4.65K ohms ± 10% 10 watts (W.W.)		17	K6
R423	150 ohms ± 10% 1 watt		17	P13
R424	220K ohms ± 10% 1 watt		17	L15
R425	220K ohms ± 10% 1 watt		17	L15
	CAPACITORS			
C1	18 pF ± 5% NPO Tubular		16	J16
C2	5.6 pF ± 5% NPO Tubular		16	H15
C3	18 pF ± 5% NPO Tubular		16	G16
C4	470 pF + 100% — 0% K5000 Disc		16	J17
C5	0.01 μF + 100% — 0% K5000 Disc		16	F18
C6	0.001 μF + 100% — 0% K5000 Feed Thru		16	F16
C7	270 pF ± 20% K1200 Tubular		16	G15
C8	10 pF ± 5% NPO Tubular		16	G14
C9	6.8 pF ± 5% NPO Tubular		16	F13
C10	12 pF ± 5% NPO Tubular		16	G14
C11	4-10 pF Trimmer	101929	16	E14
C12	0.001 μF + 100% — 0% K5000 Disc		16	E13
C13	0.001 μF + 100% — 0% K5000 Disc		16	E12
C14	0.5-3 pF Trimmer	101930	16	E12
C15	180 pF ± 5% N750 Style "B" Tubular		16	F12
C16	50-140 pF Trimmer Mica	40038	16	F10
C17	0.001 μF + 100% — 0% K5000 Tubular		16	G11
C18	0.001 μF + 100% — 0% K5000 Feed Thru		16	E11
C19	0.001 μF + 100% — 0% K5000 Feed Thru		16	F11
C20	0.5-3 pF Trimmer	101930	16	E10
C21	270 pF ± 20% K1200 Tubular		16	F12
C22	0.88 pF ± 20% NPO Bead		16	J9
C23	82 pF ± 10% N750 Style "C" Disc		16	E9
C24	270 pF ± 20% K1200 Disc		16	E8
C25	0.63 pF ± 20% NPO Bead		16	G9
C26	12 pF ± 5% N750 Tubular		16	E9
C27	0.5-3 pF Trimmer	101930	16	E10
C28	10 pF ± 5% NPO Tubular		16	F9
C29	Trimmer (Fine Tuning) A.W.A. Special	40135	16	E7
C30	470 pF + 100% — 0% K5000 Disc		16	H17
C31	470 pF + 100% — 0% K5000 Disc		16	G17
C101	39 pF ± 10% NPO Tubular (In L101)		17	J15
C102	0.01 μF + 100% — 0% Hi-K Disc		17	K17
C103	0.0047 μF ± 10% 400V Working Paper		17	K18
C104	0.01 μF + 100% — 0% Hi-K Disc		17	J17
C105	100 pF ± 5% 500V Working Silvered Mica (In T101)		17	H17

CODE No.	DESCRIPTION	PART No.	FIG. No.	LOCATION
	CAPACITORS (continued)			
C106	470 pF ± 5% 500V Working Silvered Mica		17	F18
C107	470 pF ± 5% 500V Working Silvered Mica		17	F17
C108	10 μF 65 P.V. Electrolytic		17	E17
C109	0.0068 μF ± 20% 600V Working Paper		17	F19
C110	0.047 μF ± 10% 200V Working Paper		17	F19
C111	100 pF ± 10% 1000V Working Mica		17	T3
C112	25 μF 40 P.V. Electrolytic		17	T6
C113	0.0022 μF ± 10% 600V Working Paper		17	S6
C114A	20 μF 450 P.V. Electrolytic	229680	17	K6
C114B	50 μF 65 P.V. Electrolytic	229680	17	K6
C114C	10 μF 450 P.V. Electrolytic	229680	17	K6
C201	12 pF ± 5% NPO Tubular		17	K8
C202	0.0047 μF + 100% — 0% Hi-K Disc (In L202)		17	J9
C203	12 pF ± 5% NPO Tubular		17	J8
C204	0.0047 μF + 100% — 0% Hi-K Disc		17	J9
C205	0.0047 μF + 100% — 0% Hi-K Disc		17	G8
C206	0.0047 μF + 100% — 0% Hi-K Disc		17	H10
C207	0.0047 μF + 100% — 0% Hi-K Disc		17	F11
C208	0.0047 μF + 100% — 0% Hi-K Disc		17	G10
C209	0.0047 μF + 100% — 0% Hi-K Disc		17	E11
C210	0.0047 μF + 100% — 0% Hi-K Disc		17	E10
C211	0.0047 μF + 100% — 0% Hi-K Disc		17	E12
C212	0.0047 μF + 100% — 0% Hi-K Disc		17	F13
C213	0.0047 μF + 100% — 0% Hi-K Disc		17	E13
C214	0.0047 μF + 100% — 0% Hi-K Disc		17	E12
C215	0.0047 μF + 100% — 0% Hi-K Disc		17	E15
C216	47 pF ± 10% N750 Tubular Ceramic		17	F13
C217	4.7 pF ± .5 pF N750 Bead		17	F13
C218	6.8 pF ± .5 pF NPO Tubular		17	K14
C219	0.018 μF ± 10% 400V Working Paper		17	J14
C220	39 pF ± 10% N220 Disc		17	K13
C221	47 pF ± 5% N750 Tubular		17	L12
C222	12 pF ± 5% N750 Tubular		17	L12
C223	0.01 μF + 100% — 0% Hi-K Disc		17	K11
C224	47 pF ± 5% N750 Tubular		17	L13
C225	0.1 μF ± 20% 400V Working Paper		17	N11
C301	0.1 μF ± 20% 200V Working Paper		17	G12
C302	0.1 μF ± 20% 200V Working Paper		17	K10
C303	0.027 μF ± 10% 400V Working Paper		17	H12
C304	330 pF ± 10% 500V Working Silvered Mica		17	H11
C305	0.033 μF ± 20% 400V Working Paper		17	F9
C306	220 pF ± 10% 500V Working Silvered Mica		17	F6
C307	82 pF ± 10% 1000V Working Silvered Mica		17	P6
C308	0.027 μF ± 10% 400V Working Paper		17	F4
C309	0.0068 μF ± 5% 500V Working Mica		17	F5

CIRCUIT CODE MODELS 207-C, 209-C, 211-T AND 212-C

CODE No.	DESCRIPTION	PART No.	FIG. No.	LOCATION
	CAPACITORS (continued)			
C310A	5 μF 600 P.V. Electrolytic			
C310B	25 μF 450 P.V. Electrolytic	229720	17	P14
C310C	70 μF 450 P.V. Electrolytic			
C310D	5 μF 450 P.V. Electrolytic			
C311	0.047 μF ± 10% 600V Working Paper		17	J4
C312	0.047 μF ± 20% 600V Working Paper		17	G6
C313	0.068 μF ± 10% 200V Working Paper		17	J3
C314	0.001 μF ± 10% 1600V Working Paper		17	M4
C315	0.022 μF ± 10% 1000V Working Paper		17	K4
C316	0 027 μF ± 10% 1000V Working Paper		17	K5
C317	0.018 μF ± 20% 400V Working Paper		17	R8
C318	0.047 μF ± 20% 600V Working Paper		17	S8
C401	0.047 μF ± 20% 400V Working Paper		17	P5
C402	0.022 μF ± 20% 400V Working Paper		17	N5
C403	0.47 μF ± 20% 200V Working Paper		17	Q4
C404	82 pF ± 10% 1000V Working Mica		17	P6
C405	270 pF ± 5% 1000V Working Mica		17	N4
C406	0.01 μF ± 5% 500V Working Mica		17	M7
C407	560 pF ± 10% 1000V Working Mica		17	Q19
C408	20-220 pF Trimmer (Hor. Drive)	231127	17	Q20
C409	0.0012 μF ± 5% 500V Working Mica		17	Q19
C410	0.1 μF ± 20% 600V Working Paper		17	P20
C411	0.27 μF ± 10% 200V Working Paper		17	S18
C412	270 pF ± 20% 1000V Working Mica		17	Q14
C413	0.047 μF ± 10% 1000V Working Paper		17	R16
C414	0.047 μF ± 10% 1000V Working Paper		17	R14
C415	Not used			
C416	180 pF ± 10% 2500V Working Disc		17	M18
C417	150 pF ± 10% 2500V Working Disc		17	N16
C418	150 pF ± 10% 2500V Working Disc (In Yoke)			
C419	90 μF 525 P.V. Electrolytic		17	N8
C420	Not used			
	TRANSFORMERS			
T1A	Aerial Matching Transformer	40156	16	H15
T1B	Aerial Matching Transformer	40156	16	H14
T101	Ratio Detector	40077	17	H17
T102	Audio Output (on LS101)			
T201	1st Video I.F.	40071	17	G10
T202	2nd Video I.F.	40071	17	F12
T203	3rd Video I.F.	40902	17	F14
T301	Vertical Blocking Oscillator	40066B	17	F3
T302	Vertical Output	40067A	18	F18
T401	Horizontal Blocking Oscillator	40953	18	J18
T402	Horizontal Output (High Volt Box)	41166		
T403	Power Transformer	40070C	18	V10

CODE No.	DESCRIPTION	PART No.	FIG. No.	LOCATION
	SWITCHES			
S1	Channel Selector		16	G8
S2	Channel Selector		16	G10
S3	Channel Selector		16	G12
S4	Channel Selector		16	G14
S401	Power/Tone (on R108B)		17	U4
	PILOT LAMP			
PL1	12V 2.2 watt M.E.S.		18	B19
	FUSES			
F401	0.375 Amp. Cartridge		18	K7
F402	1.5 Amp. Cartridge		17	S20
	LOUDSPEAKERS			
LS101	9 x 6 Permanent Magnet (207-C)	21191		
LS101	9 x 6 Permanent Magnet (209-C, 212-C)	21185		
LS101	7 x 5 Permanent Magnet (211-T)	21189		
LS102	7 x 5 Permanent Magnet (all models)	21034		
	VALVES			
V1	Radiotron 6BQ7A		18	B12
V2	Radiotron 6U8		18	B15
V101	Radiotron 6AU6		18	J5
V102	Radiotron 6AL5		18	G4
V103	Radiotron 6BV7		18	T18
V201	Radiotron 6CB6		18	H13
V202	Radiotron 6U8		18	E11
V203	Radiotron 6U8		18	E9
V204	Radiotron 12BY7		18	J9
V205	Radiotron 17AVP4-A (17 inch)			
	Radiotron 21 ALP4-A (21-inch)			
V301	Radiotron 6SN7-GTA		18	E16
V302	Radiotron 6AQ5		18	G16
V401	Radiotron 6SN7-GTA		18	M17
V402	Radiotron 6DQ6-A		18	P3
V403	Radiotron 6AX4-GT		18	P6
V404	Radiotron 1B3-GT (High Volt Box)		18	X4
V405	Radiotron 5AS4		18	V15

AWA