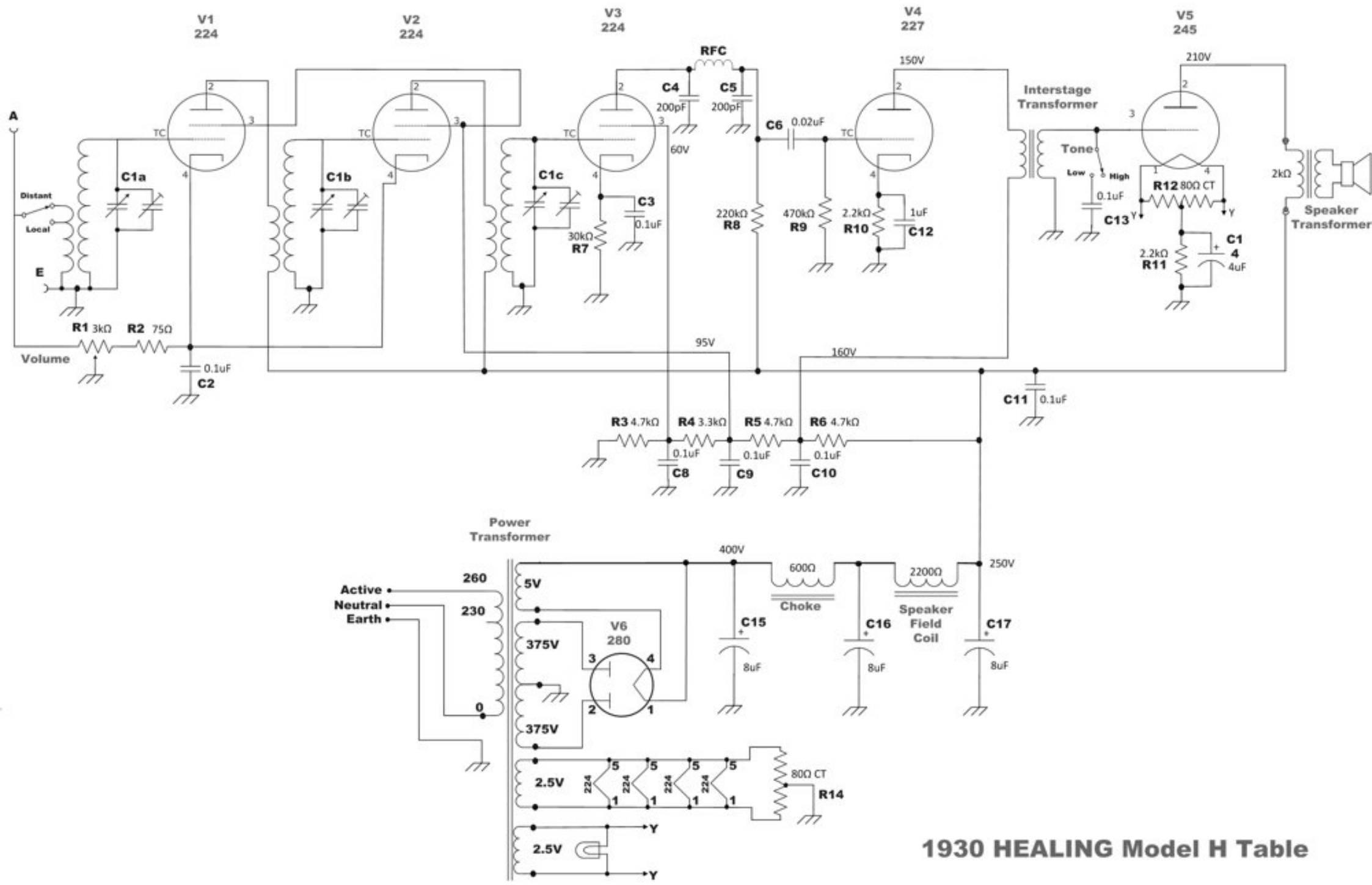

1930 HEALING Model H Table