PHILIPS Service notes

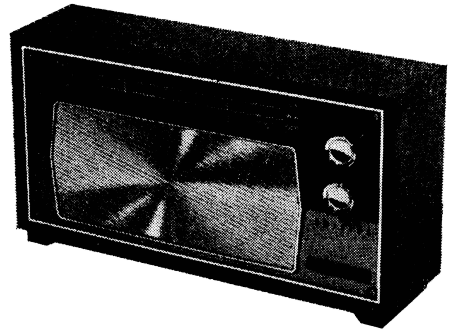

MODEL MM2

Philadelphia

SPECIFICATIONS

Tuning range	520 - 1620 kc/s
Intermediate frequency	455 kc/s
Power supply	240V, 50 c/s
Dial lamps, 12V, O.1A, tub. screw	8003D

CHASSIS REMOVAL

Remove power plug from outlet socket. Untie aerial lead. Remove both control knobs (push on fit).
Remove the four corner screws from the front grille. Bring the grille forward to the limit of the length of the speaker leads.
Remove the two screws holding the chassis plate to the cabinet. Ease the chassis out of the cabinet. All parts are now accessible for service, modules may be removed from the chassis if required.
Replacement is a reversal of the above procedure but watch that the final position of the chassis is such that the dial scale lines up squarely in the grille aperture.

OUTPUT TRANSISTOR ADJUSTMENT

Provision is made by means of metering points for insertion of a meter for adjustment of output transistor current by means of R108. Current should be adjusted, at no signal, in accordance with the following table. This table includes total receiver current (less lamps).

Temp. °F.	TR103/104 Current (mA)	Receiver Current (mA)
50	2.0	15.6
55	2.2	15.8
60	2.4	16.05
65	2.6	16.3
70	2.8	16.7
75	3.0	17.05
80	3.25	17.4
85	3.5	17.8
90	3.75	18.3
95	4.0	18.7
100	4.3	19.1
105	4.6	19.7
110	4.9	20.2
115	5.3	20.8

ALIGNMENT

Before commencing alignment fully close the tuning capacitor and position the dial cursor to the stop mark at the low frequency end of the dial scale.

I.F. Alignment

Put volume control at maximum and fully close tuning capacitor. Connect signal generator via I.F. dummy to base of TRI. Peak cores of IFT's in the following order at the frequencies quoted:—

IFT 3	455 kc/s
IFT 2	457 kc/s
IFT 1	453 kc/s

Repeat adjustments as necessary.

R.F. Alignment

Inject signal via a single turn around the rod aerial assembly.

Fully close tuning capacitor and with generator at 520 kc/s, peak oscillator coil (L1, 2, 3).

Tune receiver to 1500 kc/s mark on dial scale and with generator set at this frequency, peak oscillator trimmer (C204).

Repeat the above two adjustments.
Tune receiver to 600 kc/s mark on dial scale and with generator set at this frequency, peak adjust aerial coil (L202, 203).

Repeat 1500 kc/s adjustment.

Also at 1500 kc/s, peak aerial trimmer (C202).

Repeat above adjustments as may be necessary.

July, 1966

Published by PHILIPS ELECTRICAL PTY. LIMITED
Branches in all States

MM2

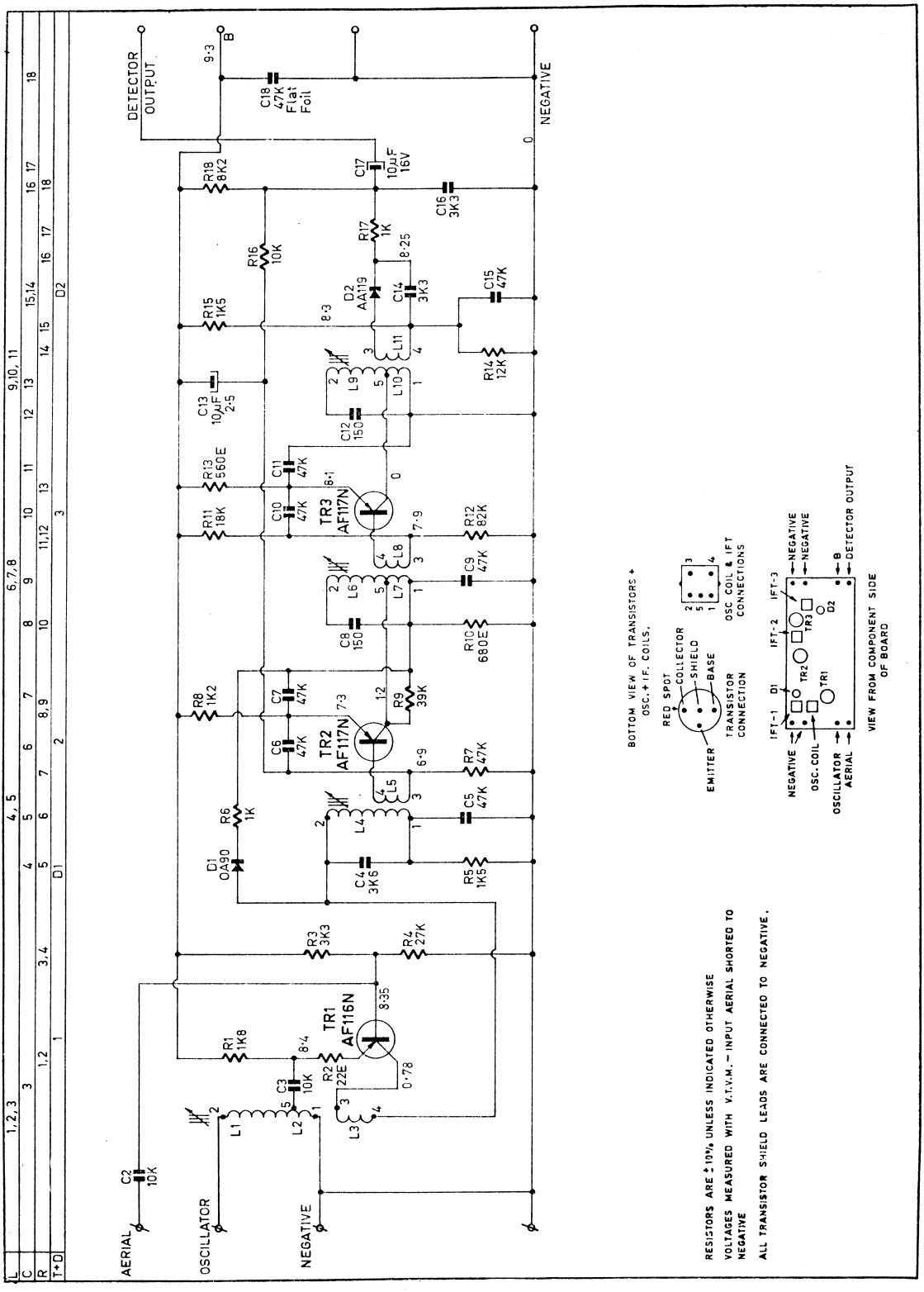
DETECTOR OUTPUT
NEGATIVE
AERIAL
OSCILLATOR
NEGATIVE
TR1 AF116N
TR2 AF117N
TR3 AF117N
D1 OA90
D2 AA119
C2 10K
C3 10K
C4 3K6
C5 47K
C6 47K
C7 47K
C8 150
C9 47K
C10 47K
C11 47K
C12 150
C13 10µF 2·5
C14 3K3
C15 47K
C16 3K3
C17 10µF 16V
C18 47K Flat Foil
R1 1K8
R2 22E
R3 3K3
R4 27K
R5 1K5
R6 1K
R7 47K
R8 1K2
R9 39K
R10 680E
R11 18K
R12 82K
R13 560E
R14 12K
R15 1K5
R16 10K
R17 1K
R18 8K2
L1
L2
L3
L4
L5
L6
L7
L8
L9
L10
L11
BOTTOM VIEW OF TRANSISTORS + OSC. + I.F. COILS.
RED SPOT
COLLECTOR
SHIELD
BASE
EMITTER
TRANSISTOR CONNECTION
OSC COIL & IFT CONNECTIONS
NEGATIVE
NEGATIVE
DETECTOR OUTPUT
IFT-1
IFT-2
IFT-3
D1
D2
TR1
TR2
TR3
NEGATIVE
OSC. COIL
OSCILLATOR AERIAL
VIEW FROM COMPONENT SIDE OF BOARD
RESISTORS ARE ±10% UNLESS INDICATED OTHERWISE
VOLTAGES MEASURED WITH V.T.V.M. – INPUT AERIAL SHORTED TO NEGATIVE
ALL TRANSISTOR SHIELD LEADS ARE CONNECTED TO NEGATIVE.

| | | |

MM2

MECHANICAL PARTS LIST

DESCRIPTION	CODE No.	DESCRIPTION	CODE No.
Badge — Philips	CS.436.562	Dial scale mounting block, 2x	CS.424.323
Dial cord spring	CS.200.044	Grille assy. — front of cabinet	CR.520.900
Dial drive cord, 34-¾″ required	965/JB1	Knob — volume	CR.524.506
Dial drive drum assy.	CR.382.211	Knob — tuning	CR.524.507
Dial cursor assy.	CR.480.703	Socket — pick up	CZ.369.942
Dial lampholder, 2x	A3.311.15	Tuning spindle assy.	CR.371.245
Dial scale	CS.412.511	Wordmark — "Philadelphia"	CS.436.563

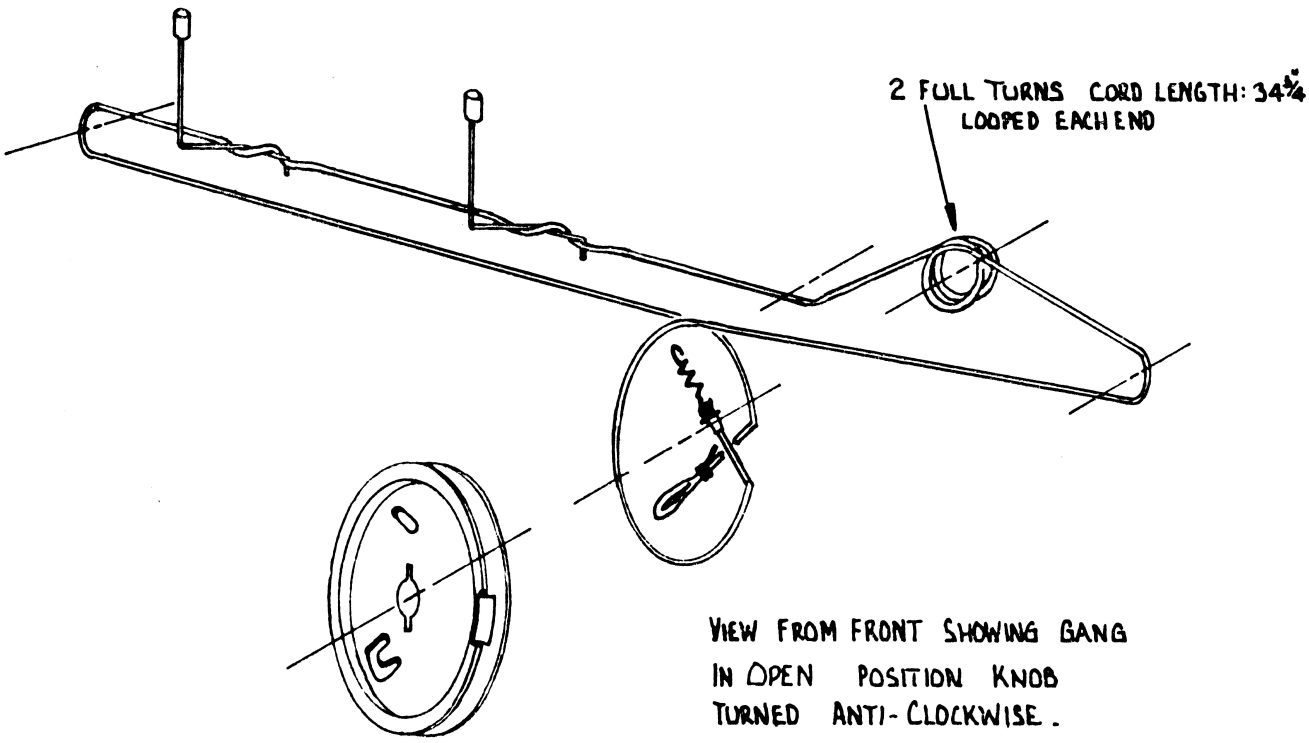

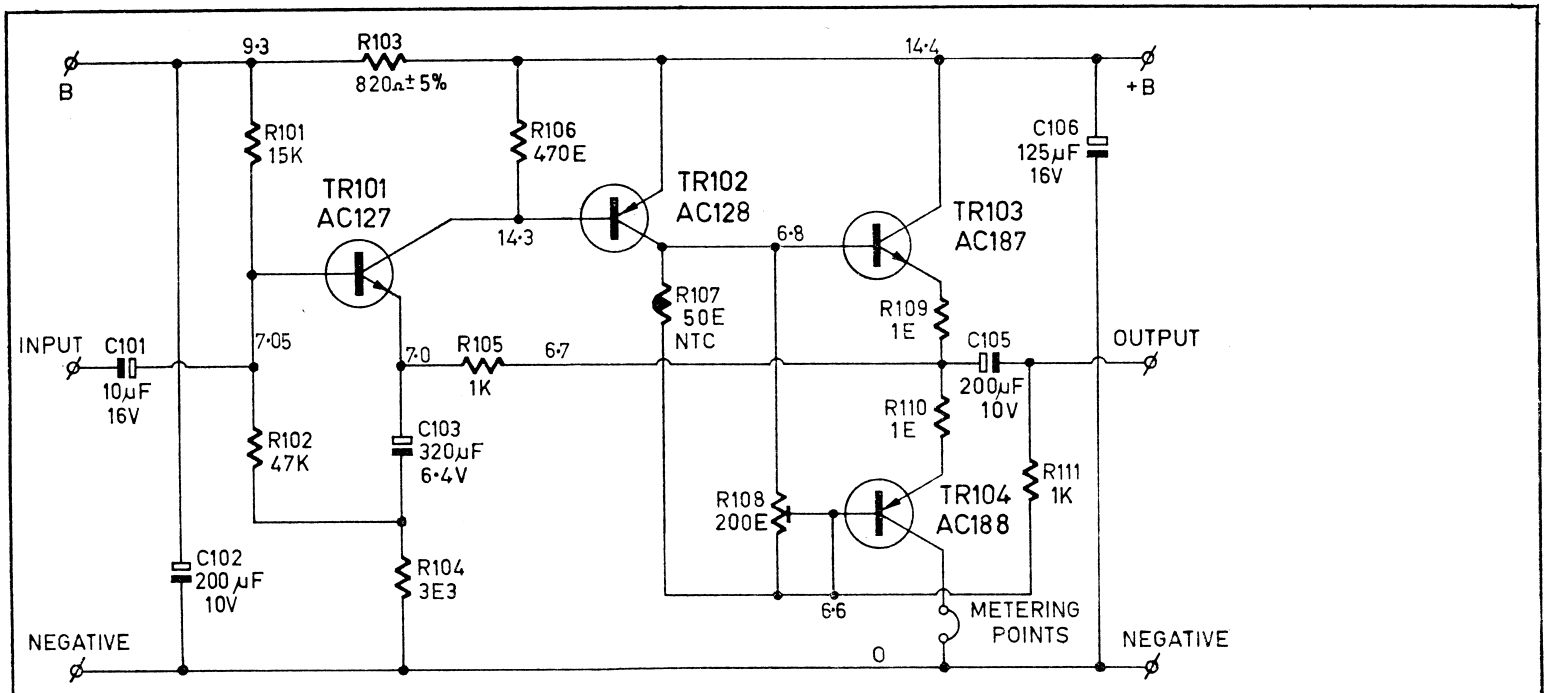

NOTE ON CONDENSERS:
WHOLE NUMBERS – pF UNLESS INDICATED OTHERWISE.
TOLERANCE POLYESTERS: ± 10%
TOLERANCE ELECTROLYTICS: – 10 + 50%

RESISTORS ARE ± 10% UNLESS INDICATED OTHERWISE.

VOLTAGES MEASURED WITH VTVM AND 1K5 ± 10% CONNECTED BETWEEN B AND NEGATIVE.

ZERO SIGNAL COLLECTOR CURRENT TR103 / TR104 IS SET BY MEANS OF R108 TO 3·0mA AT 75°F.

COLLECTOR PNP: RED SPOT
COLLECTOR NPN: BLUE SPOT

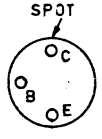

TRANSISTOR CONNECTIONS

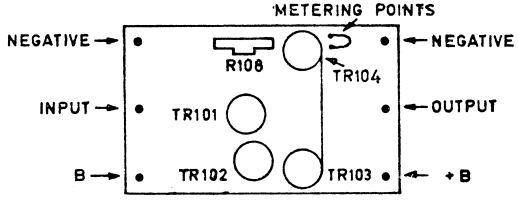

VIEW FROM COMPONENT SIDE OF BOARD

MM2

ELECTRICAL PARTS LIST

CAPACITORS

C. No.	DESCRIPTION	V.W.	TOL. ±%	TYPE OR CODE No.
2	10K ceramic	25	+80—20	Ducon CDR
3	10K ceramic	25	+80—20	Ducon CDR
4	3K6 Styroflex	100	5	C.285.AA/B3K6
5	47K ceramic	25	+80—20	Ducon CDR
6	47K ceramic	25	+80—20	Ducon CDR
7	47K ceramic	25	+80—20	Ducon CDR
8	Part of 2nd I.F.T.			
9	47K ceramic	25	+80—20	Ducon CDR
10	47K ceramic	25	+80—20	Ducon CDR
11	47K ceramic	25	+80—20	Ducon CDR
12	Part of 3rd I.F.T.			
13	10M electrolytic	2.5	—	C.426.AS/A10
14	3K3 ceramic	500	+50—20	C.322.BA/H3K3
15	47K ceramic	25	+80—20	Ducon CDR
16	3K3 ceramic	500	+50—20	C.322.BA/H3K3
17	10M electrolytic	16	—	C.426.AR/E10
18	47K flat foil	40	20	C.280.AA/P47K
101	10M electrolytic	16	—	C.426.AR/E10
102	200M electrolytic	10	—	C.426.AR/D200
103	320M electrolytic	6.4	—	C.426.AR/C320
105	200M electrolytic	10	—	C.426.AR/D200
106	125M electrolytic	16	—	C.426.AR/E125
201, 202	Tuning capacitor	—	—	CZ.107.609
203, 204	and trimmers	—	—	MSP K2XT/66390
205	8E2 ceramic, N2200	500	0.5pF	Ducon CDS
206	330E ceramic, N750	500	5	C.304.GH/B330E
207	100K Polyester	160	10	C.296.AA/A100K
208	640M electrolytic	16	—	C.436.AR/E640
209	2000M electrolytic	16	—	C.431.BR/E2000
210	6E8 ceramic	500	0.5pF	C.304.GB/L6E8

RESISTORS

R. No.	DESCRIPTION	W.	TOL. ±%	TYPE OR CODE No.
1	1K8 carbon	½	10	I.R.C. B.T.S.
2	22E carbon	½	10	I.R.C. B.T.S.
3	3K3 carbon	½	10	I.R.C. B.T.S.
4	27K carbon	½	10	I.R.C. B.T.S.
5	1K5 carbon	½	10	I.R.C. B.T.S.
6	1K carbon	½	10	I.R.C. B.T.S.
7	47K carbon	½	10	I.R.C. B.T.S.
8	1K2 carbon	½	10	I.R.C. B.T.S.
9	39K carbon	½	10	I.R.C. B.T.S.
10	680E carbon	½	10	I.R.C. B.T.S.
11	18K carbon	½	10	I.R.C. B.T.S.
12	82K carbon	½	10	I.R.C. B.T.S.
13	560E carbon	½	10	I.R.C. B.T.S.
14	12K carbon	½	10	I.R.C. B.T.S.
15	1K5 carbon	½	10	I.R.C. B.T.S.
16	10K carbon	½	10	I.R.C. B.T.S.
17	1K carbon	½	10	I.R.C. B.T.S.
18	8K2 carbon	½	10	I.R.C. B.T.S.
101	6K8 carbon	½	10	I.R.C. B.T.S.
102	68K carbon	½	10	I.R.C. B.T.S.
103	1K carbon	½	10	I.R.C. B.T.S.
104	3E3 metal oxide	¼	10	E.017.BC/A3E3
105	1K carbon	½	10	I.R.C. B.T.S.
106	470E carbon	½	10	I.R.C. B.T.S.
107	50E N.T.C. disc.	1	10	B8.320.01A/50E
108	200E carbon potentiometer, pre-set (bias adj.)			E.086.AC/200E
109	1E metal oxide	¼	10	E.017.BC/A1E
110	1E metal oxide	¼	10	E.017.BC/A1E
111	1K carbon	½	10	I.R.C. B.T.S.
201	Former for L201			
202	250K carbon potentiometer, taper S16 (volume) with SPST switch (on/off)			CZ.032.051 I.R.C. 45 or Ducon PSP
203	1K5 carbon	½	10	I.R.C. B.T.S.
204	6E8 cracked carbon	½	10	B8.305.05A/6E8
205	2K2 carbon	½	10	I.R.C. B.T.S.

INDUCTORS

L. No.	DESCRIPTION	TYPE OR CODE No.
1, 2, 3	Oscillator coil	CZ.652.000
4, 5	1st I.F. transformer	CZ.651.004
6, 7, 8	2nd I.F. transformer	CZ.651.003
9, 10, 11	3rd I.F. transformer	CZ.651.005
201	Aerial loading coil	CZ.321.292
202, 203	Rod aerial assy.	CZ.323.079
	Ferroxcube rod for above	CS.152.428
204	Speaker, Rola 8-4H/15	CZ.162.535
205, 206	Power transformer	CZ.344.153